rexroth
A Bosch Company

Basic

14.0

Mechanic Elements

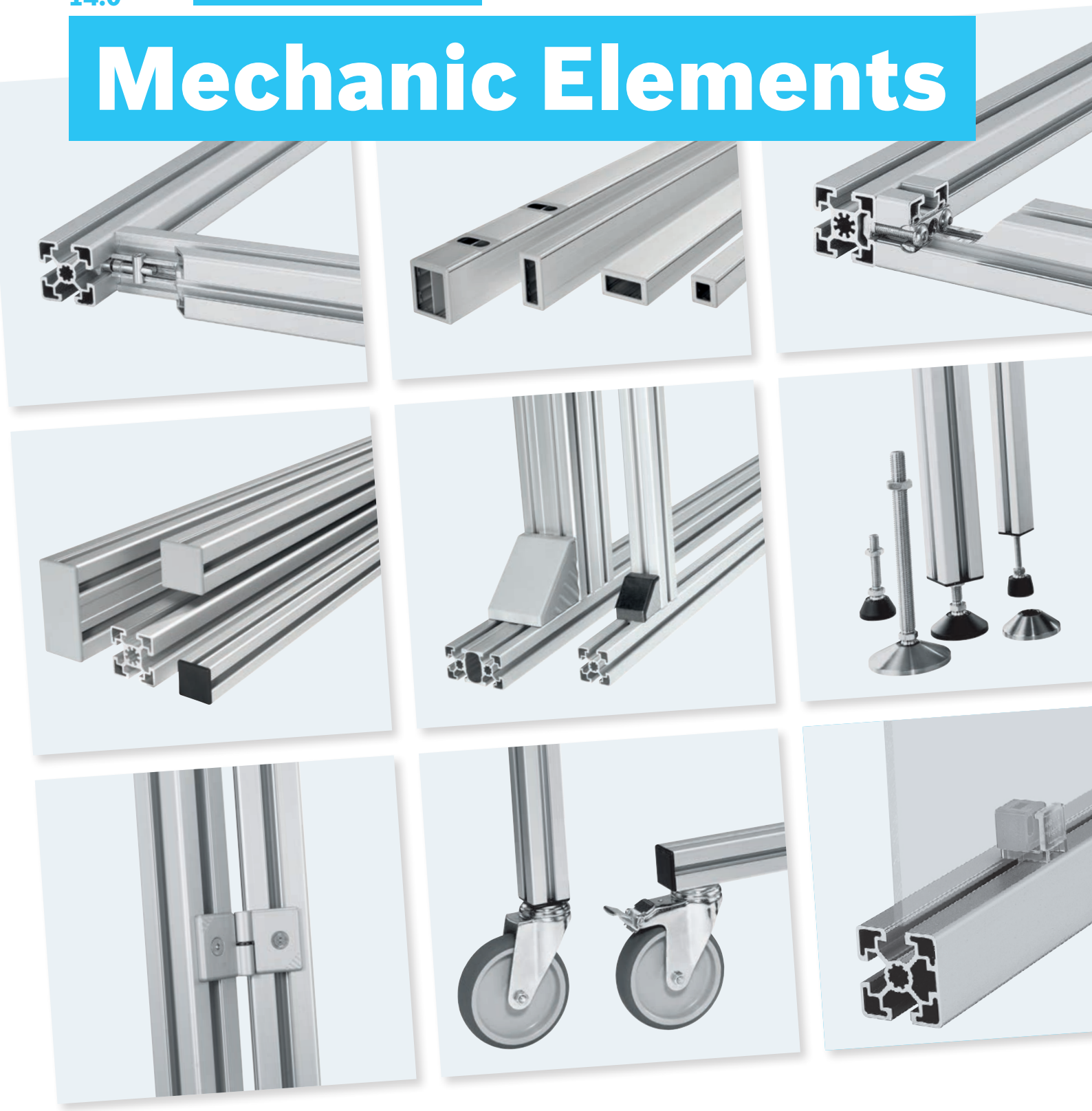

www.boschrexroth.com

Explanations

Presentation				Explanation
40x40 HR		**L** (mm)	**No.**	Product available for delivery as: – Single component of variable length, e.g. Order: 1 x 3 842 993 257 / 785 Delivery: 1 x 40x40 HR with M12 profile finishing on both sides, L = 785 mm – Delivery unit (: here 20 pcs) of fixed length, e.g. Order: 1 x 3 842 529 381 Delivery: 20 x 40x40 HR (without profile finishing), L = 6070 mm M12 M12 Notes on profile finishing, see Section 2.
1 pc		50 ... 6070	**3 842 993 256 / L**	
1 pc	M12 M12	110 ... 6000	**3 842 993 257 / L**	
20 pcs		6070	**3 842 529 381**	
50/50	**Slot**	**ESD**	**No.**	The product is delivered in packaging units (: in this case 20 units); i.e. the order quantity must at least equal the specified quantity or a multiple of it; differing quantities will be rounded up Order examples: – Order: 1 x 3 842 530 381 – delivery: 20 x bracket 50/50 – Order: 20 x 3 842 530 381 – delivery: 20 x bracket 50/50 – Order: 30 x 3 842 530 381 – delivery: 40 x bracket 50/50
Bracket (standard)	10	20	**3 842 530 381**	
Threaded sleeve			**No.**	For order tables without the column, the following applies: = 1 Order examples: – Order: 1 x 3 842 504 790 – delivery: 1 x threaded sleeve incl. fastening material (FS) enclosed with the product for peripheral mounting
			3 842 504 790	
6 8 10				1. Profile with slot width 6 mm, 8 mm, 10 mm; all modular dimensions 2. Accessories suitable for mounting on profiles with the specified slot width; all modular dimensions
10 10 40 / 10 10 45 / 10 10 50 / 10 10 60				1. Profile with slot width 10 mm; modular dimensions: 40 mm, 45 mm, 50 mm, 60 mm 2. Accessories suitable for mounting on profiles with the specified slot width and modular dimensions
ESD				Conductive material version in accordance with DIN EN 61340-5-1; suitable for use in ESD-sensitive areas
Clean Room				Suitable for use in clean rooms
				Profile finishing required (drilling, thread cutting, milling)
				The centering tab can be broken off for offset assembly or assembly at an angle to the profile slot.
				Screw with Torx profile
				Weight
F_{max}				Permitted loading (N)

Introduction	**1**
Strut profiles	**2**
Connection elements	**3**
Joints	**4**
Air-supply elements	**5**
Feet and wheels	**6**
Mounting of panel elements	**7**
Doors and fittings	**8**
Accessories for protective devices	**9**
Protective devices and partition walls EcoSafe	**10**
Installation elements	**11**
Elements for manual movement	**12**
Linear guides	**13**
Tools	**14**
FiFo station	**15**
Components for lateral guides	**16**
Components for ESD applications	**17**
Technical data	**18**
Material number overview	**19**
Index	**20**

The Rexroth modular profile system

Working environments are all the more efficient when they are individually tailored to meet the respective production requirements. Bosch Rexroth's ultra-flexible assembly system offers quick, complete solutions for every industry.

From flow racks and frames made of aluminum profiles, enclosures, ergonomic assembly work stations through to fully automated manufacturing lines with transfer systems: Based on decades of practical experience, the sophisticated and uniquely versatile assembly technology from Bosch Rexroth is continuously being further developed. With modular, finely coordinated components, Bosch Rexroth facilitates the realization of customized, future-proof solutions for your production. With customer-oriented services and comprehensive service support, including free-of-charge planning software, our modular system offers everything you need for efficient working environments.



One system – Everything covered.
Our versatile comprehensive range:
The “Single-source overall concept”



Smart product concept – The Rexroth modular profile system

Bosch Rexroth's high-performance aluminum modular profile system allows you to create secure, complete and transparent solutions for improving work productivity.

VERSATILE



- Standardized components
- Well designed connecting systems
- Low planning costs
- Short assembly times with few tools needed

FUNCTIONAL

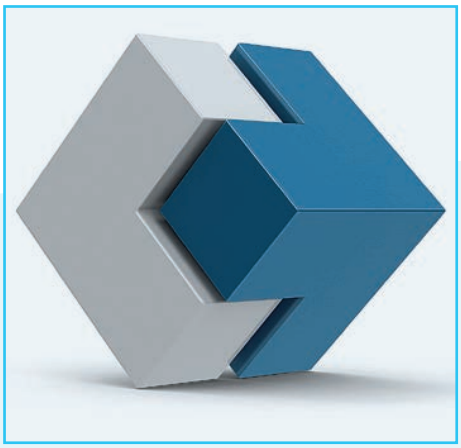

- Systematically matched elements
- Comprehensive color concept
- Universal ESD-compatibility
- Anti-torsion elements and positioning aids

SECURE



- Strong profiles and stable connectors withstanding strong forces
- Compliance with standards and regulations
- Guaranteed performance data
- Durable and corrosion-resistant

Rexroth aluminum strut profiles – Smart individual components in comprehensive systems

Over 120 different profile cross-sections with perfectly adjusted modular dimensions as well as versatile connection elements and accessories enable you to turn any idea into reality – for maximum design flexibility and security.

Strong profiles	Secure connection technology	Custom-fit matching accessories
Economical choice for any load scenario!	Rexroth connectors hold firmly and securely!	Easy to fix in the profile slot or central hole!

Our product advantages



- Profiles with high load-bearing capacities
- Innovative special profiles
- Perfectly matching components
- Easy handling
- Fast and secure fitting
- Application options without limits

Secure connection technology – Smart and proven in practice and workshop environments

**The right connection element for every application – whether rectangular, variable-angle, flexible, internal, vibration-resistant, torsion-resistant.
The connectors break the anodized coating of the profiles. This way, a conducting connection is established between the profiles to comply with the requirements for applications in ESD-sensitive environments (ESD – Electro Static Discharge).**

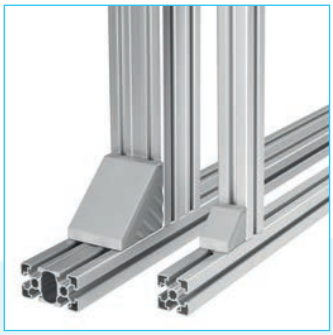

BRACKET

- Quick and precise installation with centering lugs – even overhead
- Plug-through screws including position recognition



CUBIC CONNECTOR

- Well-designed connectors with high rigidity
- Quick installation without profile preparation
- Cut-out for gap-free mounting of panel elements



QUICK CONNECTOR

- Easy and quick installation
- Free slots for panel mounting, movable on profile slot

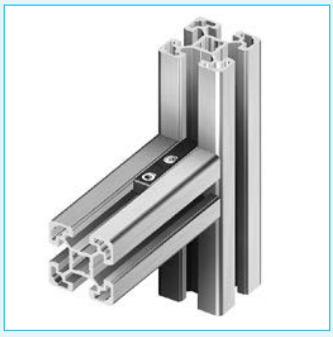

TENSIONING CONNECTOR

- Well-designed corner connection without end finishing



BOLT CONNECTOR

- Reliable and strong connection for challenging requirements like permanent vibration or dynamic load
- High torsion resistance



T-CONNECTORS AND END CONNECTORS

- Very high load-bearing capacity
- Exact and quick installation without profile finishing and movable on the slot

Matching accessories – Tailor precisely to the modular profile system

**The accessories are tailored precisely to the modular profile system and enable easy mounting in the profile slot or the central bore.
The modular profile system of profiles and connection elements is completed by a wide range of accessories.**

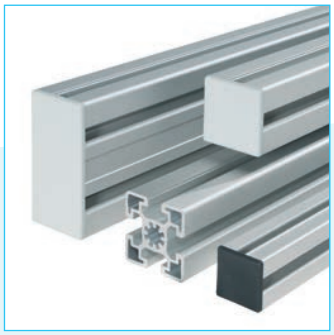

COVER CAPS

- Protection against injury at open cutting edges
- Attractive design in “signal gray” and “black ESD”

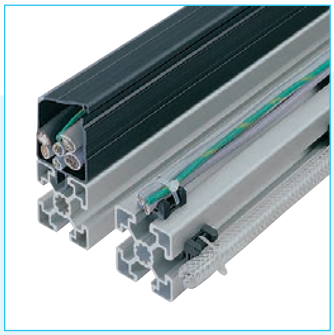

INSTALLATION ELEMENTS

- Well-arranged installation of power lines
- Low-maintenance electrical installation with cable ducts and cable brackets



FEET AND WHEELS

- Secure support
- Wide range of supports and wheels



DOORS AND FITTINGS

- Construction of hatches and doors
- Attachment via profile slot or directly at panel element



MOUNTING OF PANEL ELEMENTS

- Mounting of panel elements (e.g. protective pane) in the slot
- Design in compliance with Machinery Directive



MANUAL MOVEMENT

- Wide selection of sliders, support wheels and hydraulic adjustment options
- Individual solutions with standard products

Design elements – Well-arranged connections, clear marking

SIGNAL GRAY

The signal gray (RAL7004) color variant meets the market requirement for a subtle color scheme for fixtures and therefore provide the application with a harmonious and calm appearance. The low-contrast aluminum structure forms the optical background and leaves open room for customer-specific design elements.

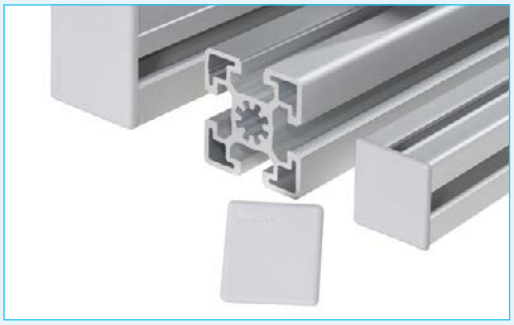

ESD BLACK

As the only modular profile system on the market, Rexroth offers all standard and ESD accessories in gray and black. The conductive plastic components can discharge voltage and ensure equipotential bonding in the frame. The showstopper: Black ESD components make it easy to visually distinguish ESD applications from non-ESD applications.

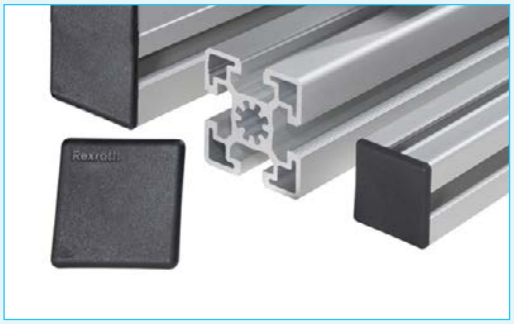

designLINE – THE PERFECT COMBINATION OF QUALITY AND FUNCTION

You value good design? The *designLINE* version of our proven die-cast connectors features an impressive and high-quality appearance. Thanks to special pointing in “RAL 9006 white aluminum”, the appearance of your application is further improved by visually seamless adaptation to aluminum profiles. The paint is also scratch-resistant. A special highlight: The ESD-compatibility of connections is maintained.

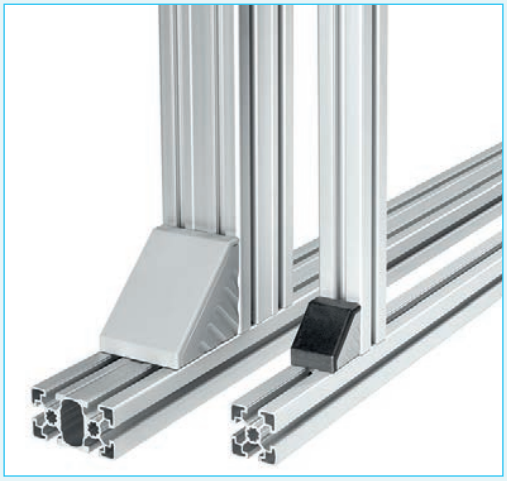

Experience and expertise – thanks to professional, worldwide network

Comprehensive experience, in-depth know-how and reliable production capacities ensure timely and speedy supply.

Reliable worldwide availability

- Dealers, systems providers and regional and national subsidiaries are always near at hand for you – worldwide
- Highly efficient central warehouse in Stuttgart
- Local warehouses at Rexroth sites
- “Made to order” production capacities

On-time, speedy supply

- All components available
- Pre-assembled modules, complete frames
- Prompt delivery and excellent adherence to deadlines

Professional point of contact

- Personalized advice
- Comprehensive services
- Local sales partners
- Highly skilled experts

Your contact partner can be found under:
www.boschrexroth.com/contact



Bosch Rexroth AG, 3 842 540 392 (2019-07)

Systematic safety – playing it safe from the start

Thanks to the overall system of the Rexroth modular profile system, accident risks are avoided and safety regulations reliably complied with.

There are numerous hazards in any modern work environment and particularly where they are expected the least. A lack of safety in production, assembly or storage facilities poses a risk of death for personnel.
Severe accidents may have unexpected consequences for the liable manufacturer of equipment or the equipment owner.
Operational safety of equipment is a serious topic within the responsibility of the company and the facility owner. In most countries, these positions are also liable.

Legal regulations, product regulations, certifications, regular checks and verifications and documentation are comprehensive requirements. We are aware of them and offer our support.

For further information, refer to our website. Simple scan the QR code for direct access:

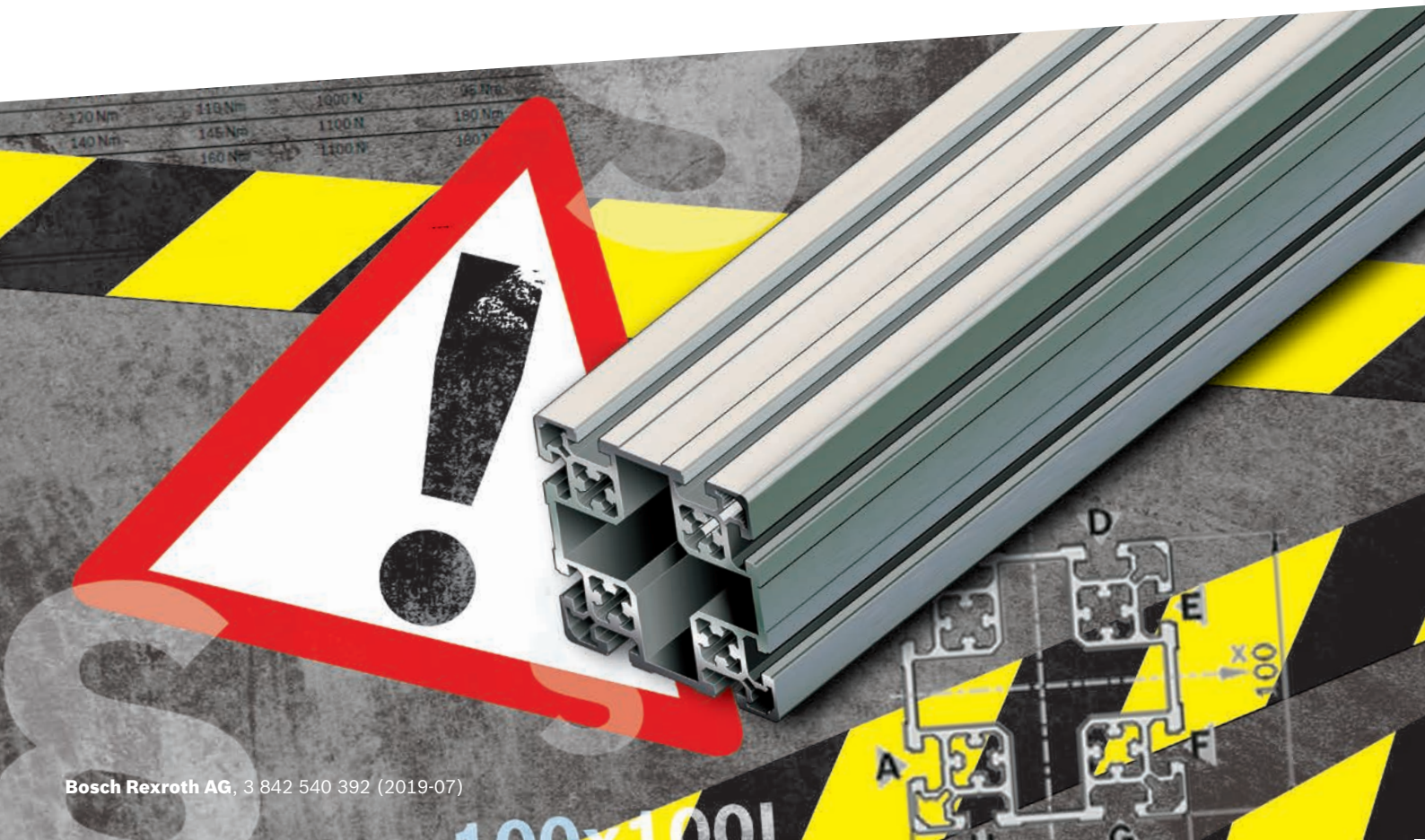

Maximum planning security with MT*pro* planning software

Unlimited combination options together with simple planning and ordering allow you to achieve perfect results.

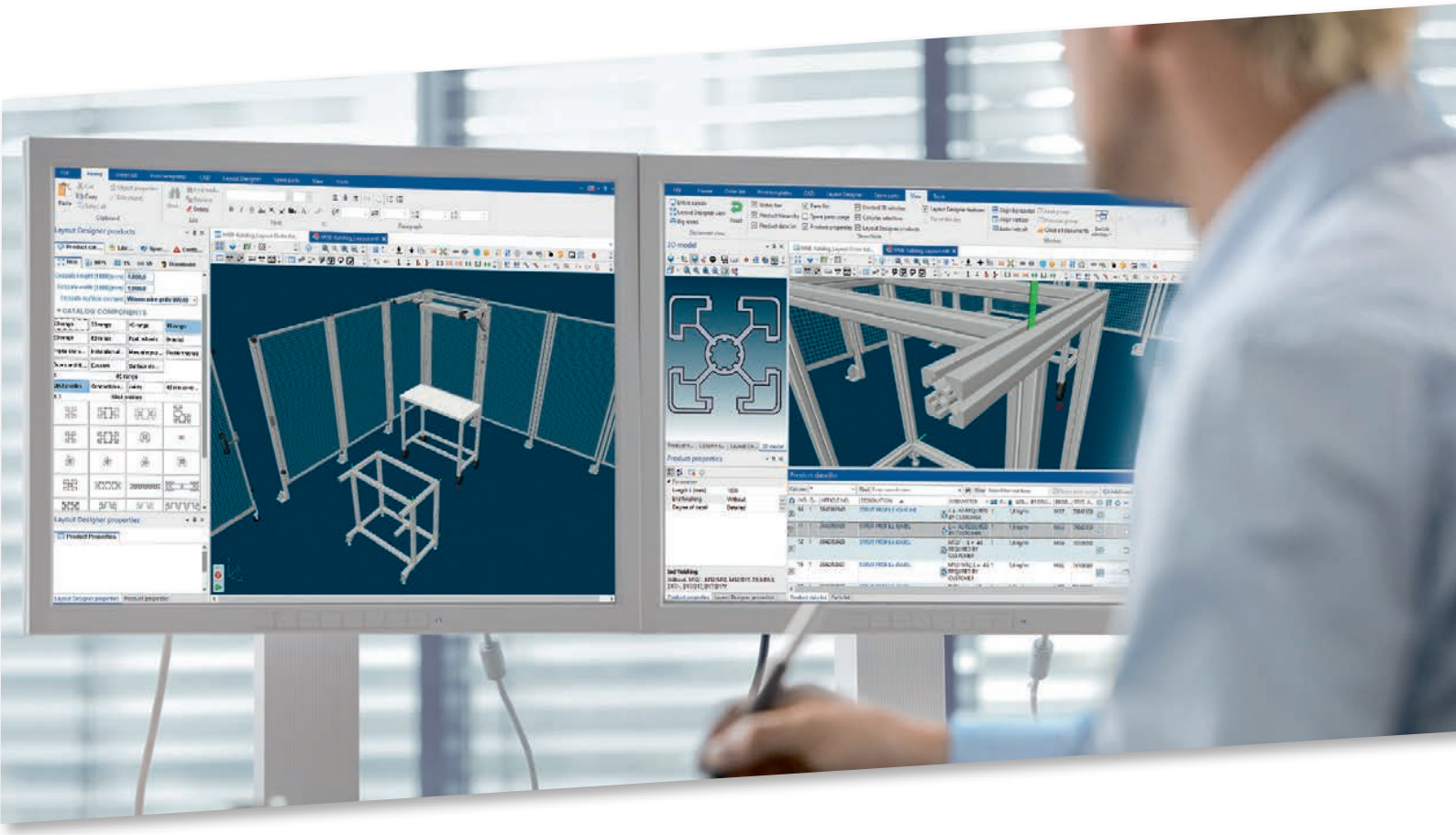

This especially user-friendly software speeds up and simplifies the planning of application-specific frames, enclosures, and workstations.
The entire ordering process can also be done in next to no time. And the data can be transferred to your CAD or VR environment via a CAD interface. The program offers the following functions and full content in seven languages (en/de/fr/es/it/ja/zh):

- Complete product information
- CAD library
- Quick & Easy configurator
- Profile deflection calculation
- Conversion of profile drawings
- Quick and simple planning in the Layout Designer

Download MT*pro*:

Solutions for all sectors – Optimum application-oriented solutions with deep specialized know-how

A convincing concept for providing solutions for all sectors, from the automotive industry to logistics, automation, electronics or exhibition stand construction.



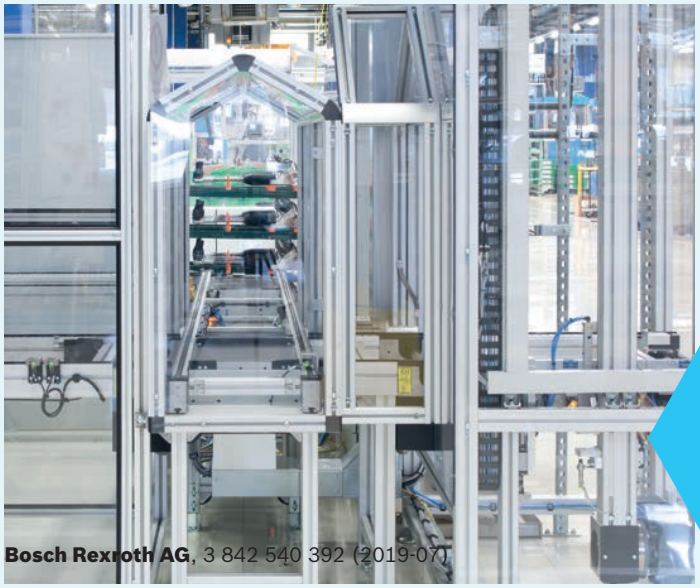

Bosch Rexroth AG, 3 842 540 392 (2019-07)

SOLUTION #1

For Robert Bosch GmbH in Stuttgart, Rexroth assembly technology has designed a flexible assembly line.

SOLUTION #2

Frame enclosure of an assembly plant for steering systems

SOLUTION #3

Thanks to a tightening station for manufacturing of generators made of Rexroth aluminum profiles, work process can be realized even easier.



SOLUTION #4

EcoSafe protective fences from Rexroth are used in fully automatized assembly of car bodies at Jaguar Land Rover, UK.



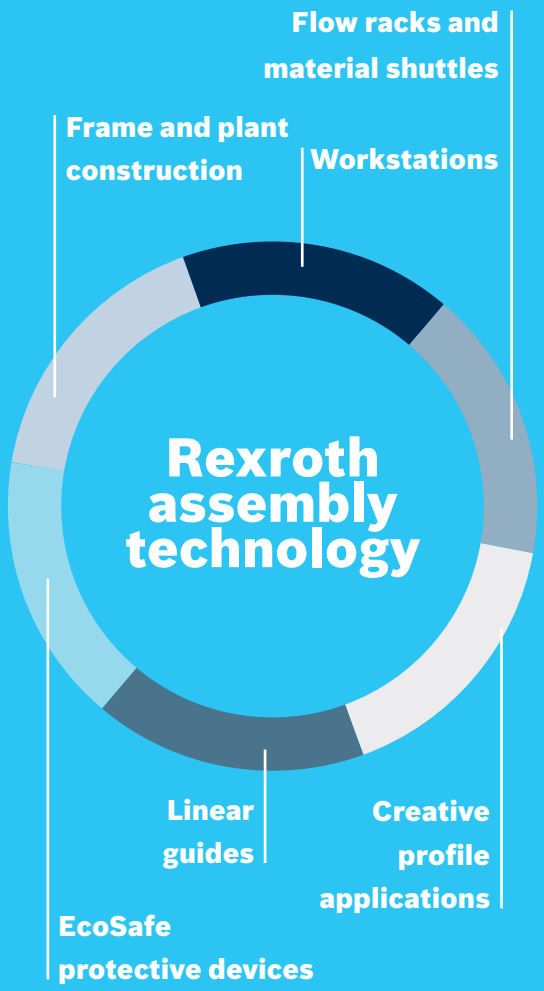

The information can also found in our brochure 3 842 532 562



More solutions can be found online.
Find out for yourself.

Bosch Rexroth AG, 3 842 540 392 (2019-07)

Competent partner – Assembly technology product range



Manual Production Systems (MPS)
The manual production system enables quick and efficient adaptation of workstations and entire production lines to the work to be carried out.

Catalog **3 842 538 281**



ActiveAssist
The ActiveAssist system is a freely configurable software that supports employees with targeted information and help functions and intelligently guides them through the assembly process.

Catalog **R999001409**

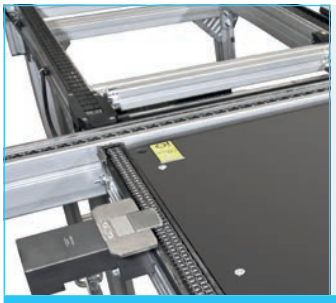

TS 2*plus*
From the automotive industry and the electronics industry to household appliances and electronics manufacturing: With their diverse system components, TS 2*plus* assembly lines are suitable for use in a wide range of industries.

Catalog **R999000396**

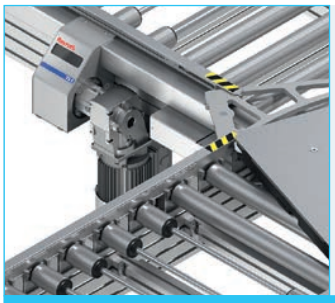

TS 5
The roller conveyor of the TS 5 transfer system conveys loads of up to 400 kg or more even over long distances and its robust construction make it especially suitable for harsh and oily environments.

Catalog **3 842 540 380**



ActiveMover linear drive transfer system
The manual production system enables quick and efficient adaptation of workstations and entire production lines to the work to be carried out.

Catalog **R999001427**

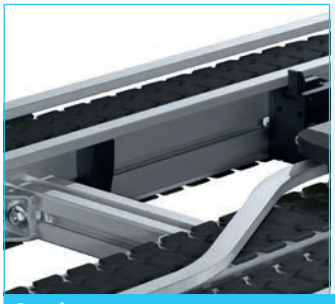

VarioFlow *plus*
VarioFlow *plus* is a high-performance and low-noise conveyor system for use in the food & packaging and the healthcare fields as well as in automotive & electronic assembly lines and machine linking applications.

Catalog **R999000402**



Tightening technology
Handheld, hand-guided, semi, or fully automatic – electric tightening systems from Rexroth are the efficient and flexible solution for your production process.

Catalog **R999000049**

Strut profiles



Strut profiles, 6 mm slot, 20 mm modular dimension (p. 2-10)



Strut profiles, 8 mm slot, 30 mm modular dimension (p. 2-15)



Strut profiles, 10 mm slot, 40 mm modular dimension (p. 2-23)



Strut profiles, 10 mm slot, 45 mm modular dimension (p. 2-35)



Strut profiles, 10 mm slot, 50 mm modular dimension (p. 2-50)



Strut profiles, 10 mm slot, 60 mm modular dimension (p. 2-52)

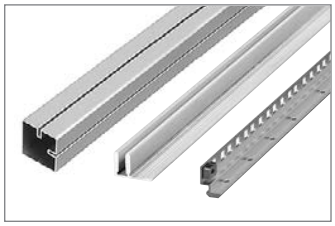

Rectangular tube (p. 2-54)
Clamping profile (p. 2-55)
Al angle profile 19″ (p. 2-56)



Frame profile
22.5x30 (p. 2-57)
22.5x45 (p. 2-58)



Angle profile (p. 2-59)
Suspension profile (p. 2-60)
Container mount (p. 2-61)



Grooved plate (p. 2-62)

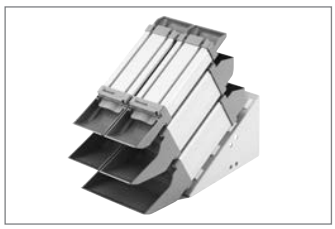

Material chute (p. 2-63)

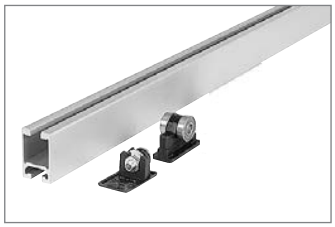

Profile rail (p.2-65)



Profiles for installing conveyor media (p. 2-66)

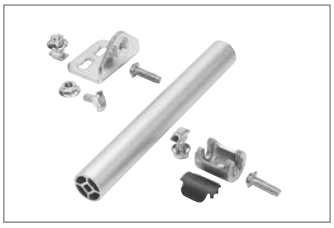

Round tube D28 (p. 2-69)
Strut profile D28x55 (p. 2-69)



EcoShape tubular framing system (p. 2-72)

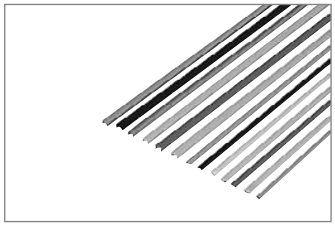

Cover profiles, additional accessories (p. 2-84)

Strut profiles

With more than 120 strut profiles for all types of loading, Bosch Rexroth AG offers the widest product range for different demands:

- Square and rectangular profiles
- Light profiles with optimized cross-sections
- Round profiles and profiles with smooth lateral surfaces

Connectors with high load-bearing capacities combined with ultra robust slots and large central bores make profile connections possible which can handle high static and dynamic loads.

Bosch Rexroth AG offers you six different profile ranges. All profiles within one profile range have the same slot dimensions and spacing to ensure perfect coordination during construction.
Due to their high degree of robustness, the 10 mm slotted profiles are suitable for constructions ranging from tables to heavy machine frames. They are available in four profile series with a slot spacing of 40 mm, 45 mm, 50 mm, or 60 mm.

The profiles with 8 mm and 6 mm slots are used in the construction of lightweight equipment, partition walls, stands, or showcases.

Profile length in profile packaging units ( )
The stated length of the profile packaging units relates to the guaranteed usable length.
During anodizing as part of the manufacturing process bare areas which are approx. 30 mm long are left at each end of the profile (= contact areas), so the profiles are generally supplied incorporating an excess length of 100 mm.

Example:

45x45L		**L** (mm)	**No.**
20 pcs		6070	**3 842 553 611**

Notice: The length dimension “L” in the table equals the usable length, whereas the actual length is approx. 100 mm longer.

Strut profiles – slot sizes and modular dimensions

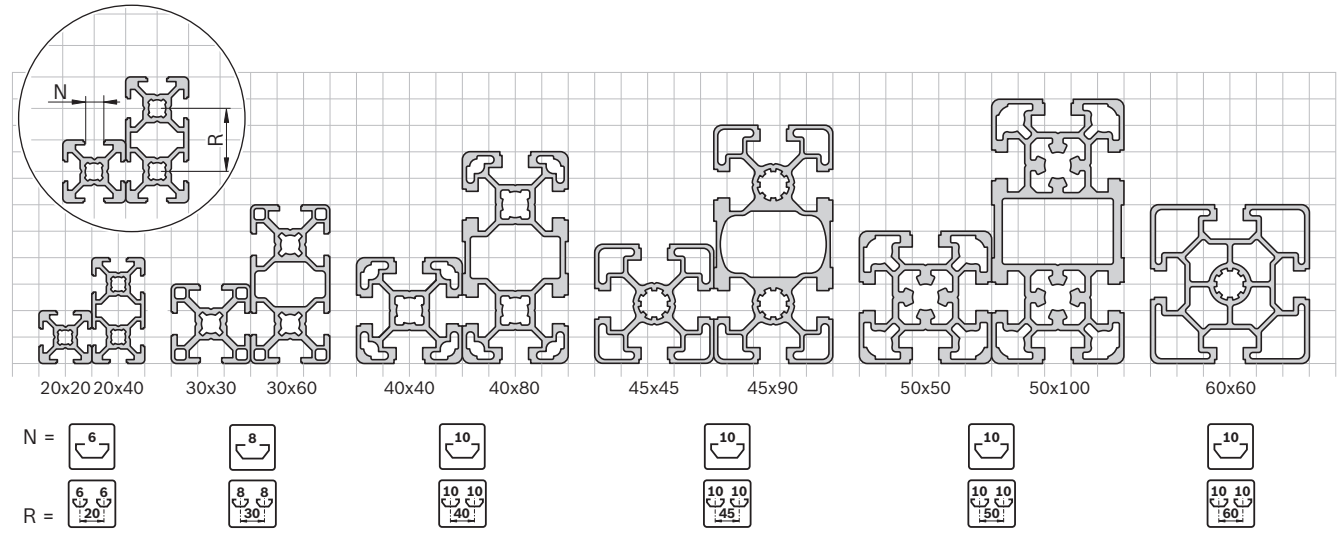

Slot size N = 6 mm, 8 mm, 10 mm
Modular dimensions R = 20 mm, 30 mm, 40 mm, 45 mm, 50 mm, 60 mm

Technical data – profiles

Profile		Slot	Profile surface	Moment of inertia		Moment of resistance		Torsion index		Weight	Page
			A (cm²)	I_x (cm⁴)	I_y (cm⁴)	W_x (cm³)	W_y (cm³)	I_t (cm⁴)	W_t (cm³)	m (kg/m)	
20x20		6	1.6	0.7	0.7	0.7	0.7	0.08	0.17	0.4	2-11
20x20 1N		6	1.9	0.8	0.8	0.8	0.8	0.60	0.67	0.5	2-11
20x20 2N		6	1.8	0.7	0.8	0.7	0.8	0.31	0.52	0.5	2-11
20x20 2NVS		6	1.8	0.7	0.7	0.7	0.7	0.37	0.52	0.5	2-12
20x20 3N		6	1.7	0.7	0.8	0.7	0.7	0.19	0.34	0.5	2-12
20x20 R		6	1.6	0.6	0.6	0.5	0.5	0.21	0.39	0.4	2-12
20x40		6	2.9	4.6	1.2	2.5	1.4	0.68	0.91	0.8	2-13
20x60		6	3.5	14.2	1.7	4.7	1.7	2.30	2.00	0.9	2-13
20x40x40		6	4.2	6.0	6.0	2.6	2.6	1.50	1.30	1.1	2-13
10x40		6	2.1	3.2	0.2	1.6	0.4	–	–	0.6	2-14
30x30		8	3.1	2.8	2.8	1.8	1.8	0.29	0.33	0.9	2-16
30x30 1N		8	3.7	3.1	3.5	2.0	2.3	2.80	1.50	1.0	2-16
30x30 2N		8	3.5	2.8	3.5	2.1	2.7	1.50	1.20	1.0	2-16
30x30 2NVS		8	3.5	3.1	3.1	2.0	2.0	1.70	1.10	1.0	2-17
30x30 3N		8	3.3	3.1	2.8	2.3	2.1	0.86	0.73	0.9	2-17
30x30°		8	3.7	3.5	3.6	2.0	1.9	1.50	2.00	1.0	2-17
30x45°		8	4.0	3.6	5.1	2.1	2.3	2.10	2.40	1.1	2-18
30x60°		8	3.6	3.0	4.1	1.7	1.9	1.50	2.00	1.0	2-18
30x30 R		8	2.9	2.3	2.3	1.4	1.4	0.81	1.20	0.8	2-18
30x60		8	5.5	19.6	5.1	7.0	3.9	2.60	2.10	1.5	2-19
30x60 4N		8	5.8	20.2	5.5	6.7	3.8	4.80	2.40	1.6	2-19
30x60x60		8	8.2	26.2	26.2	7.6	7.6	6.40	3.60	2.2	2-19
30x90		8	7.7	60.7	7.3	13.5	4.9	5.10	3.80	2.1	2-20
30x120		8	9.9	136.3	9.6	22.7	6.4	7.60	5.60	2.7	2-20
30x45		8/10	4.0	8.1	3.9	3.9	2.9	1.30	1.30	1.1	2-21
60x60 8N		8	9.8	39.7	39.7	13.2	13.2	19.30	6.80	2.6	2-21
11x20		8	1.0	0.5	0.1	0.7	0.3	–	–	0.3	2-21
15x120		8	9.0	110.4	2.2	18.4	2.7	–	–	2.4	2-22
40x40L		10	5.6	9.1	9.1	4.5	4.5	1.30	0.74	1.5	2-25
40x40L 0N		10	6.3	10.4	10.4	5.2	5.2	10.70	4.30	1.7	2-25
40x40L 1N		10	6.1	9.8	10.3	4.7	5.1	6.90	3.70	1.7	2-25
40x40L 2N		10	6.0	9.0	10.3	4.5	5.2	4.00	3.00	1.6	2-26
40x40L 2NVS		10	6.0	9.7	9.7	4.9	4.9	4.50	2.70	1.6	2-26
40x40L 3N		10	5.8	9.7	9.0	4.8	4.5	2.60	1.70	1.6	2-26
40x30°		10	6.2	9.4	11.8	4.7	5.9	3.00	3.10	1.7	2-27
40x45°		10	6.8	9.9	16.6	5.0	8.3	4.20	3.70	1.8	2-27
40x60°		10	6.3	8.7	13.1	4.3	6.5	3.00	3.10	1.7	2-27
40x40L R		10	5.0	7.2	7.2	3.6	3.6	2.50	2.00	1.3	2-28
40x40 HR		10	5.5	8.1	7.6	4.0	3.6	4.60	2.80	1.5	2-28

Profile		Slot	Profile surface	Moment of inertia		Moment of resistance		Torsion index		Weight	Page
			A (cm^2)	I_x (cm^4)	I_y (cm^4)	W_x (cm^3)	W_y (cm^3)	I_t (cm^4)	W_t (cm^3)	m (kg/m)	
40x80L		10	9.9	63.4	17.3	15.9	8.7	8.02	4.80	2.7	2-29
40x80L 2N		10	10.9	66.6	20.8	16.6	10.4	22.40	7.58	2.9	2-29
40x80L 4N		10	10.4	65.2	19.1	16.3	9.9	13.30	4.40	2.8	2-29
40x80L 2NVS		10	10.7	67.8	19.0	17.0	9.5	19.24	7.55	2.9	2-30
40x80L 3NVS		10	10.6	67.8	19.0	17.0	9.5	15.90	5.20	2.9	2-30
40x80x80L		10	15.4	96.6	96.6	24.2	24.2	19.60	9.80	4.2	2-30
40x120L		10	15.5	203.2	27.8	33.9	13.9	17.20	10.00	4.2	2-31
40x160L		10	20.5	466.7	37.2	58.3	18.6	25.80	14.60	5.5	2-31
80x80L		10	18.2	132.1	132.1	33.0	33.0	59.80	17.20	4.9	2-32
80x80L 4N		10	19.1	142.5	142.5	35.6	35.6	83.90	15.4	5.2	2-32
80x80L 4NVS		10	19.3	142.5	142.5	35.6	35.6	92.00	16.80	5.2	2-33
80x80L 6N		10	18.8	134.1	140.9	33.5	36.2	72.60	15.00	5.1	2-33
40x120x120L		10	24.6	318.0	318.0	42.2	42.2	37.10	19.00	6.7	2-33
80x120L		10	25.6	389.2	192.8	64.9	48.2	119.00	29.10	6.9	2-34
80x160L		10	32.9	850.7	253.4	106.3	63.4	182.00	41.10	8.9	2-34
45x45L		10	6.0	11.7	11.7	5.2	5.2	1.46	0.75	1.6	2-35
45x45L 0N		10	6.7	13.5	13.5	6.0	6.0	16.20	6.10	1.8	2-35
45x45L 1N		10	6.5	12.6	13.5	5.5	6.0	10.00	5.20	1.8	2-36
45x45L 2N		10	6.4	11.6	13.5	5.2	6.0	5.50	4.30	1.7	2-36
45x45L 2NVS		10	6.4	12.6	12.6	5.6	5.6	6.30	3.80	1.7	2-36
45x45L 3N		10	6.2	12.6	11.7	5.4	5.2	3.40	2.40	1.7	2-37
45x30°		10	6.9	12.7	15.2	5.0	5.3	6.60	5.70	1.9	2-37
45x45°		10	7.6	13.4	21.4	5.2	6.4	9.00	6.80	2.0	2-37
45x60°		10	6.8	11.4	16.9	4.4	5.2	6.80	4.30	1.8	2-38
45x45L R		10	4.9	8.6	8.6	5.0	5.0	3.30	2.80	1.3	2-38
45x45HR		10	6.6	11.0	10.7	4.4	4.8	7.60	3.40	1.8	2-38
45x45		10	7.5	13.8	13.8	6.1	6.1	2.65	0.96	2.0	2-39
45x60		10	11.0	37.2	22.7	12.4	10.1	6.70	4.09	3.0	2-40

Profile		Slot	Profile surface	Moment of inertia		Moment of resistance		Torsion index		Weight	Page
			A (cm^2)	I_x (cm^4)	I_y (cm^4)	W_x (cm^3)	W_y (cm^3)	I_t (cm^4)	W_t (cm^3)	m (kg/m)	
45x90SL		10	9.0	73.4	18.1	16.3	8.0	8.57	4.00	2.4	2-40
45x90L		10	11.3	82.0	23.6	18.2	10.5	15.10	4.40	3.0	2-41
45x90L 2N		10	12.0	26.9	85.6	6.0	38.1	31.70	7.70	3.2	2-41
45x90L 2NVS		10	12.0	25.9	90.6	5.7	40.3	23.34	9.65	3.3	2-42
45x90L 3NVS		10	11.8	87.2	25.2	38.8	5.6	25.70	6.60	3.2	2-42
45x90		10	15.4	124.6	32.8	27.7	14.6	15.40	6.61	4.2	2-43
45x180		10	25.5	766.7	57.3	85.2	25.5	44.40	17.00	6.9	2-43
45x270		10	61.9	3962.0	118.0	300.2	61.6	–	–	16.7	2-44
45x90x90L		10	21.2	152.1	152.1	19.1	19.1	34.90	11.60	5.7	2-44
45x90x90L 4N		10	22.1	160.8	160.8	30.6	30.6	65.30	17.20	6.0	2-45
90x90SL		10	14.1	130.2	130.2	28.9	28.9	42.50	13.90	3.8	2-45
90x90L		10	24.1	211.1	211.1	46.9	46.9	82.10	20.10	6.5	2-45
90x90L 4N		10	24.2	227.4	214.7	50.5	47.7	122.00	22.20	6.5	2-46
90x90L 4NVS		10	24.2	220.9	220.9	49.2	49.2	127.00	22.00	6.5	2-46
90x90		10	38.4	299.8	299.8	66.7	66.7	118.60	26.00	10.4	2-46
90x180L		10	42.8	1380.0	401.0	153.3	89.1	257.00	47.10	11.6	2-47
90x180		10	63.6	2138.3	544.3	237.6	121.0	429.00	64.00	17.2	2-47
90x360	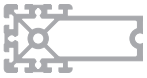	10	90.2	14065.0	710.0	781.4	157.7	937.10	117.60	24.4	2-48
15x22.5		10	1.3	0.8	0.3	0.9	0.6	–	–	0.3	2-48
15x180		10	11.6	321.7	3.2	35.7	4.2	–	–	3.1	2-49
22.5x45		10	4.7	7.1	2.9	3.2	2.6	–	–	1.3	2-49
22.5x180		10	21.6	581.0	11.8	66.8	14.7	–	–	5.8	2-49
50x50L		10	9.3	21.2	21.2	8.5	8.5	5.37	4.30	2.5	2-50
50x100L		10	17.2	162.8	42.6	32.6	17.0	29.43	10.70	4.6	2-50
50x150L		10	25.8	540.0	64.2	72.0	25.7	52.10	20.50	6.9	2-51
100x100L		10	29.9	318.3	318.3	63.7	63.7	153.53	31.40	8.1	2-51
100x200L		10	54.0	2133.1	602.1	213.3	120.4	421.00	75.70	14.6	2-52

Profile		Slot	Profile surface	Moment of inertia		Moment of resistance		Torsion index		Weight	Page
			A (cm^2)	I_x (cm^4)	I_y (cm^4)	W_x (cm^3)	W_y (cm^3)	I_t (cm^4)	W_t (cm^3)	m (kg/m)	
60x60L		10	9.6	32.4	32.4	10.8	10.8	13.20	8.70	2.6	2-52
60x60		10	14.4	52.2	52.2	17.4	17.4	15.90	8.80	3.9	2-53
60x90		10	25.8	214.2	90.5	47.6	30.2	45.80	18.00	7.0	2-53
50x50 Rectangular tube		10	4.5	15.1	15.1	5.7	5.7	–	–	1.2	2-54
Frame profile 22.5x30		10	3.2	1.7	3.0	1.5	2.0	–	–	0.9	2-57
Frame profile 22.5x45		10	3.4	6.7	1.7	2.8	1.3	–	–	0.9	2-58
Angle profile		10	4.5	8.8	6.9	3.2	2.3	–	–	1.2	2-59
Suspension profile		10	2.0	2.0	0.5	2.7	0.3	–	–	0.6	2-60
30x100 L/R Grooved plate		10	9.7	88.8	9.2	17.8	6.0	–	–	2.6	2-62
30x100 M Grooved plate		10	9.7	88.8	9.2	17.8	6.0	–	–	2.6	2-62
Profile rail 30x45C		10	4.4	10.3	5.6	4.2	3.7	–	–	1.2	2-65
U-profile		10	4.4	10.4	8.3	4.6	4.1	–	–	1.2	2-66
SP 2/R		8	5.2	4.3	11.7	2.4	5.2	–	–	1.4	2-66
SP 2/B		10	10.4	49.6	25.8	12.1	11.5	–	–	2.8	2-67
SP 2/B-50		8/10	6.9	16.1	16.9	5.3	7.5	–	–	1.9	2-67
SP 2/B-100		10	11.9	95.1	30.4	20.0	13.5	–	–	3.2	2-67
SP 2/BH		10	12.4	53.7	28.6	14.0	13.8	–	–	3.3	2-68
SP 4/R		10	26.1	222.0	95.5	84.9	16.4	–	–	3.5	2-68
D28			2.4	1.5	1.5	1.1	1.1	–	–	0.7	2-70
D28x55			5.9	3.2	88.3	2.3	32.1	–	–	1.6	2-71
D28L			1.8	1.3	1.3	1.0	1.0	–	–	0.5	2-74
D28L; N10			2.6	1.2	2.0	0.8	1.4	–	–	0.7	2-74
Section profile MV45x45		10	6.2	11.8	10.5	5.3	4.7	–	–	1.7	12-27
30x30 WG30		8	3.2	2.5	3.0	1.6	1.9	–	–	0.9	10-9
30x30 WG40		8	3.2	2.4	2.9	1.5	1.8	–	–	0.9	10-9
30x45 WG30		8	4.5	7.3	4.2	3.2	2.7	–	–	1.2	10-9
30x45 WG40		8	4.5	6.9	4.1	4.3	1.8	–	–	1.2	10-9

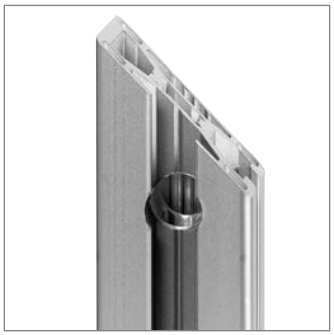

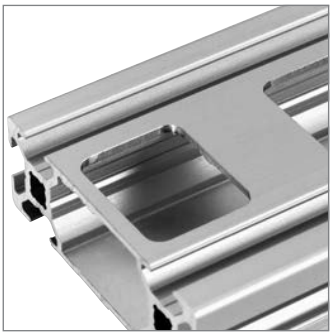





Profile finishing

Profile finishing is required whenever interlocking connectors are used. Bores must be added for bolt connectors or threads cut in central bores, for example. This requires machining with standard dimensions. However, individual customer requirements can only be satisfied by customized profile finishing for all points along the profile.
Rexroth enables even these complex requirements to be met as standard. This is because we offer three options for ordering the right profile finishing:

Example: 40x40L

3 842 993 126 / 255 D17 D17V

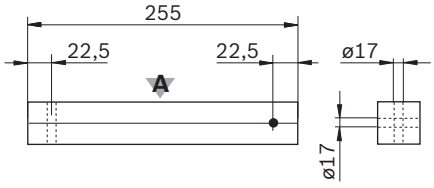

00133799

Standard profile finishing with fixed material numbers

For certain profiles, you can receive selected profile finishing with a fixed material number. This is the easiest way to order the appropriate profile finishing for our proven interlocking profile connectors.
The available profile finishing is shown in pictograms in the order tables.

Example: 40x40L 2N

3 842 993 720 / 255 /
A=D17/-; B=-/D17

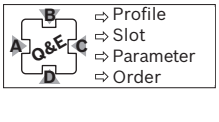

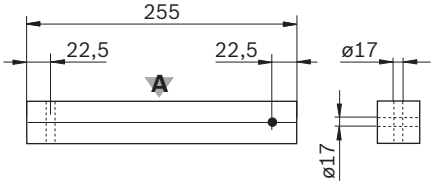

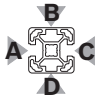

00133800

Quick & Easy – standard profile finishing

All profile finishing with standard dimensions: available for all profiles thanks to simple configuration with Quick & Easy.
For more information on the available profile finishing, see page 18-2 and following as well as the fold-out section at the end of the catalog.

Example: 20x60

3 842 993 698 / 255 /
[B=DI; PS=58; OS=20;DM=9,8]

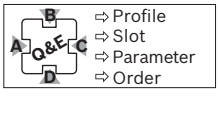

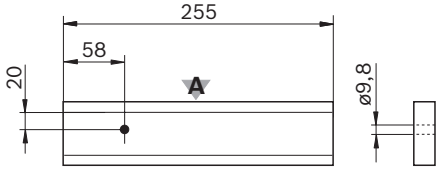

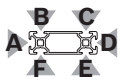

00133801

Quick & Easy – individual profile finishing

Get the greatest possible flexibility in defining your profile finishing. Individual finishing options can be achieved in virtually any combination and nearly every point along the profile.
For more information, see page 18-2 and following as well as the fold-out section at the end of the catalog.



eShop and MT*pro* – software tools for designers, planners, and purchasers

Quick & Easy is supported by Rexroth's eShop and the MT*pro* profile configurator.

We offer:

- Customer-friendly configuration
- Generation of 3D CAD models for designers
- Drawings at the press of a button
- Integration of frames/profiles in layouts
- Easy ordering at the click of a mouse

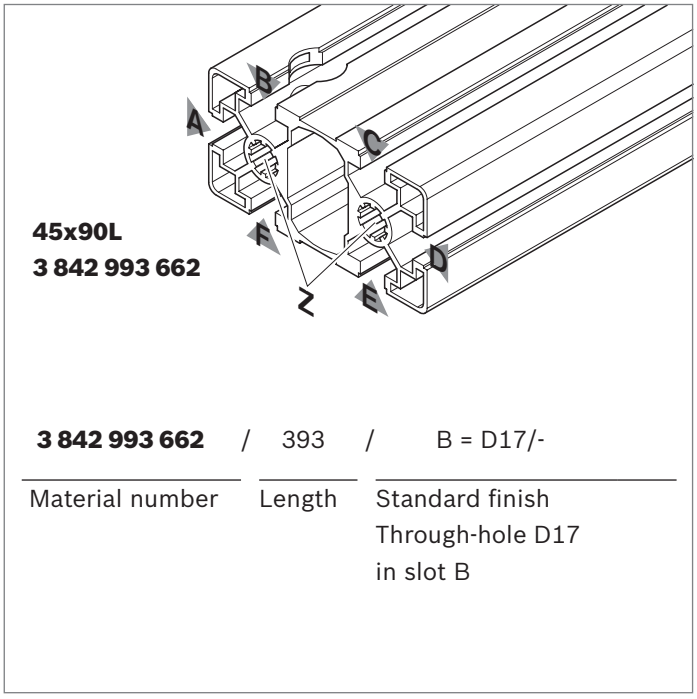

3 842 993 662	/ 393	/ B = D17/-
Material number	Length	Standard finish Through-hole D17 in slot B

Quick & Easy – four steps for simple ordering

The type of profile finishing is defined in an order key; all finishes for a profile can be summarized in one order key.

1. Select profile cross-section and length
2. Specify slot for finishing:
all profile slots are identified by letters (A; B; C; ...)
– ascending in clockwise direction (see profile dimension drawings)
3. Define the parameters:
   - Type of finishing (drilling, milling, miter cutting)
   - Distance from profile end
4. Place order:
Conventionally by fax or, preferably online in our eShop

Logical structure of the order key
Material number / length / [slot designation = finishing; parameter set]

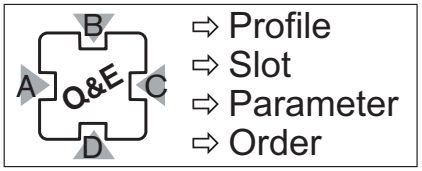

Notice:
For a detailed description of the order key, please refer to page 18-2ff


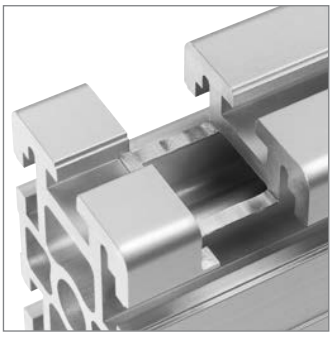
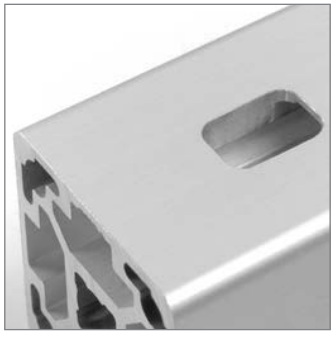



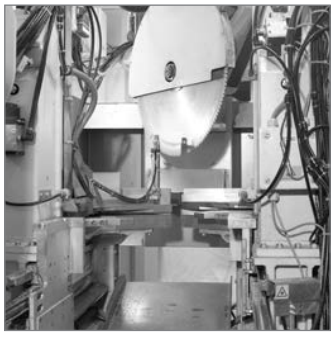


Profile finishing

Rexroth offers you numerous connection options for putting strut profiles together.
The wide variety of connector types is due to the differing demands made of the applications:

- Right-angled
- Variable-angle
- Internal
- Torsion-resistant
- Vibration-resistant
- With or without profile finishing

If you require a finished profile, it can be provided for you in an installation-ready form.
When you select the corresponding material number the profile is provided in cut, burr-free form, or alternatively fully finished with drilled holes or threads.
This eliminates risk for you and reduces your production workload.

If you wish to undertake the finishing yourself, here are a few tips:

Saw and saw blade

Segmental metal circular saw blade, carbide-tipped
Number of teeth: 92 or 96
Rotational speed: at least 2500 rpm

Finishing of central holes

As a rule, the threads can be directly formed and cut, but countersinks facilitate their production. The central holes of the strut profiles are designed for the following thread manufacturing processes.

Threads	Finishing	Notices
M6	Thread forming	–
M8	Thread forming	–
M12	Thread cutting	–
M16	Thread forming	pre-drilling in some cases

Drilling jigs

In the tools section you will find useful drilling jigs for the Rexroth standard finishes (p. 14-2).

Strut profiles with 6 mm slot

Strut profiles with 6 mm slot for light structures, suchas supports and lab fixtures.

The 20x40 and 20x60 profiles are especially suitable for reinforcing; the 20x40x40 profile is suitable for constructing showcases, flow racks, and enclosures.

Slot, modular dimensions, central bore

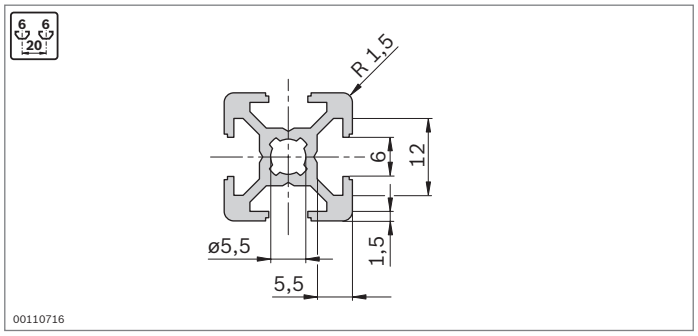

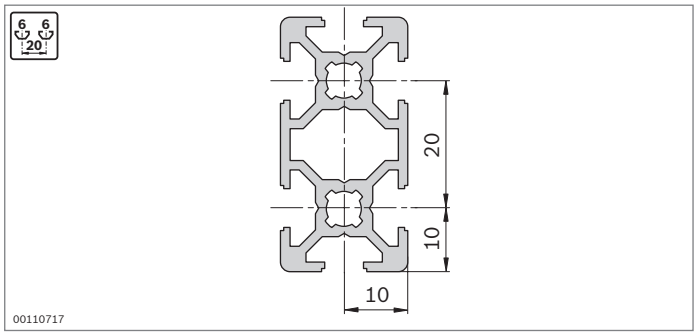

Profile finishing

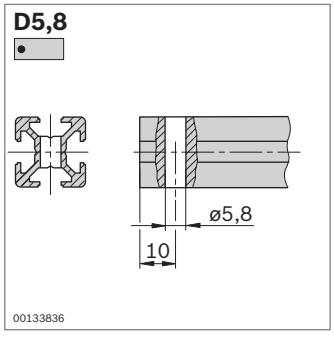

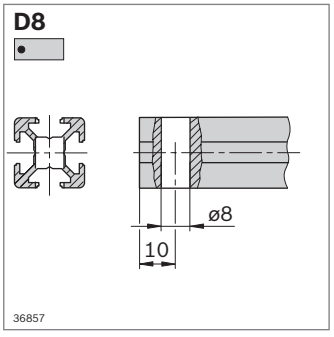

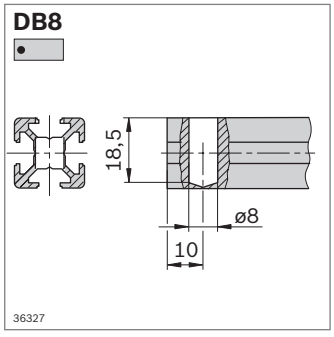

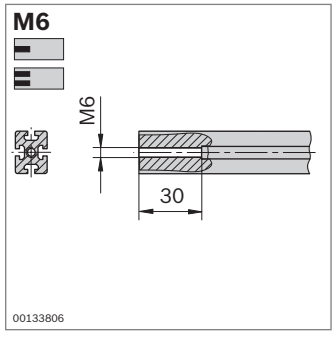

Minimum profile lengths (mm) for Quick & Easy standard profile finishing on one or both sides

	–	M6	D5.8	D8/DB8
–	50	50	50	50
M6	50	70	50	70
D5.8	50	50	50	50
D8/DB8	50	70	50	50

Reduced maximum profile lengths $L_{max\ i}$ at customized profile finishing

L_{max} (mm)	$L_{max\ i}$ (mm)
6070	5400
3000	2300
2000	1300

20x20

A = 1,6 cm²
I_x = 0,7 cm⁴
I_y = 0,7 cm⁴
W_x = 0,7 cm³
W_y = 0,7 cm³
m = 0,4 kg/m

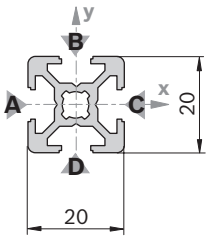

19168

20x20			L (mm)	No.
1 pc			50 ... 3000	**3 842 992 888 / L**
1 pc	M6		50 ... 3000	**3 842 993 230 / L**
1 pc	M6	M6	70 ... 3000	**3 842 993 231 / L**
1 pc	M6	D8	70 ... 3000	**3 842 993 494 / L**
1 pc	D8		50 ... 3000	**3 842 993 493 / L**
1 pc	D8	D8	50 ... 3000	**3 842 993 495 / L**
1 pc	D8	D8V	50 ... 3000	**3 842 993 496 / L**
20 pcs			3000	**3 842 517 179**

Cover cap	Color	ESD		No.
20x20 (1x)	Signal gray		100	**3 842 548 742**
20x20 (1x)	Black		20	**3 842 548 743**
Material:	PP			

Quick & Easy (p. 2-7, see fold-out section)

20x20	3 842 993 694 / ...
Length L (mm)	50 ... 3000
Standard profile finishing (note minimum length, p. 2-10)	M6 / D5.8 / D8 / DB8
Customized profile finishing ($L_{max\ i}$ = 2300 mm)	DI / DIS / MT / MTS / MI / MIS / DG[1)]

[1)] DG_{max} = 45°; L_{min1} / L_{min2} = 335 / 370 mm

20x20 1N

A = 1,9 cm²
I_x = 0,8 cm⁴
I_y = 0,8 cm⁴
W_x = 0,8 cm³
W_y = 0,8 cm³
m = 0,5 kg/m

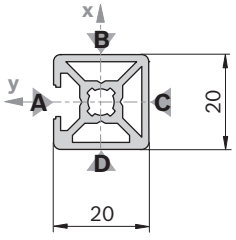

19169

Cover cap: see 20x20

20x20 1N			L (mm)	No.
1 pc			50 ... 3000	**3 842 993 421 / L**
20 pcs			3000	**3 842 536 475**

Quick & Easy (p. 2-7, see fold-out section)

20x20 1N	3 842 993 690 / ...
Length L (mm)	50 ... 3000
Standard profile finishing (note minimum length, p. 2-10)	M6 / D5.8 / D8 / DB8
Customized profile finishing ($L_{max\ i}$ = 2300 mm)	DI / DIS / MT / MTS / MI / MIS / DG[1)]

[1)] DG_{max} = 45°; L_{min1} / L_{min2} = 335 / 370 mm

20x20 2N

A = 1,8 cm²
I_x = 0,7 cm⁴
I_y = 0,8 cm⁴
W_x = 0,7 cm³
W_y = 0,8 cm³
m = 0,5 kg/m

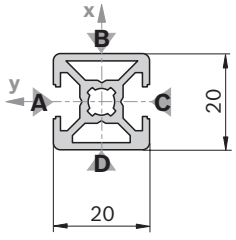

19170

Cover cap: see 20x20

20x20 2N			L (mm)	No.
1 pc			50 ... 3000	**3 842 993 422 / L**
20 pcs			3000	**3 842 536 478**

Quick & Easy (p. 2-7, see fold-out section)

20x20 2N	3 842 993 691 / ...
Length L (mm)	50 ... 3000
Standard profile finishing (note minimum length, p. 2-10)	M6 / D5.8 / D8 / DB8
Customized profile finishing ($L_{max\ i}$ = 2300 mm)	DI / DIS / MT / MTS / MI / MIS / DG[1)]

[1)] DG_{max} = 45°; L_{min1} / L_{min2} = 335 / 370 mm

20x20 2NVS

A = 1,8 cm²
I_x = 0,7 cm⁴
I_y = 0,7 cm⁴
W_x = 0,7 cm³
W_y = 0,7 cm³
m = 0,5 kg/m

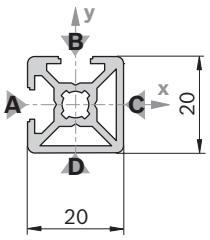

19171

Cover cap: see 20x20

20x20 2NVS		L (mm)	No.
1 pc		50 ... 3000	**3 842 992 924 / L**
20 pcs		3000	**3 842 519 658**

Quick & Easy (p. 2-7, see fold-out section)

20x20 2NVS	3 842 993 692 / ....
Length L (mm)	50 ... 3000
Standard profile finishing (note minimum length, p. 2-10)	M6 / D5.8 / D8 / DB8
Customized profile finishing ($L_{max\ i}$ = 2300 mm)	DI / DIS / MT / MTS / MI / MIS / DG[1)]

[1)] DG_{max} = 45°; L_{min1} / L_{min2} = 335 / 370 mm

20x20 3N

A = 1,7 cm²
I_x = 0,7 cm⁴
I_y = 0,8 cm⁴
W_x = 0,7 cm³
W_y = 0,7 cm³
m = 0,5 kg/m

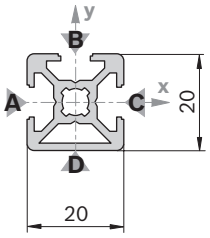

19172

Cover cap: see 20x20

20x20 3N		L (mm)	No.
1 pc		50 ... 3000	**3 842 992 889 / L**
20 pcs		3000	**3 842 517 180**

Quick & Easy (p. 2-7, see fold-out section)

20x20 3N	3 842 993 693 / ...
Length L (mm)	50 ... 3000
Standard profile finishing (note minimum length, p. 2-10)	M6 / D5.8 / D8 / DB8
Customized profile finishing ($L_{max\ i}$ = 2300 mm)	DI / DIS / MT / MTS / MI / MIS / DG[1)]

[1)] DG_{max} = 45°; L_{min1} / L_{min2} = 335 / 370 mm

20x20 R

A = 1,6 cm²
I_x = 0,6 cm⁴
I_y = 0,6 cm⁴
W_x = 0,5 cm³
W_y = 0,5 cm³
m = 0,4 kg/m

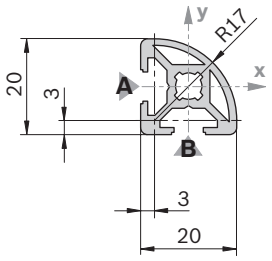

19173

Cover cap	Color	ESD		No.
20x20 R (1x)	Signal gray		20	**3 842 548 826**
20x20 R (1x)	Black		20	**3 842 548 827**
Material:	PP			

20x20 R		L (mm)	No.
1 pc		50 ... 3000	**3 842 992 890 / L**
20 pcs		3000	**3 842 517 183**

Quick & Easy (p. 2-7, see fold-out section)

20x20 R	3 842 993 695 / ....
Length L (mm)	50 ... 3000
Standard profile finishing (note minimum length, p. 2-10)	M6
Customized profile finishing ($L_{max\ i}$ = 2300 mm)	–

20x40

A = 2,9 cm²
I_x = 4,6 cm⁴
I_y = 1,2 cm⁴
W_x = 2,5 cm³
W_y = 1,4 cm³
m = 0,8 kg/m

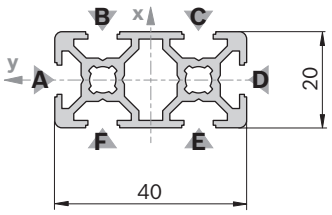

19174

20x40		L (mm)	No.
1 pc		50 ... 3000	**3 842 992 891 / L**
1 pc	D8	50 ... 3000	**3 842 993 497 / L**
1 pc	D8 D8	50 ... 3000	**3 842 993 499 / L**
1 pc	D8 D8V	50 ... 3000	**3 842 993 500 / L**
1 pc	D8V	50 ... 3000	**3 842 993 498 / L**
1 pc	D8V D8V	50 ... 3000	**3 842 993 501 / L**
24 pcs		3000	**3 842 537 816**

Profile finishing: D8: in slots B/F, C/E
D8V: in slots A/D

Cover cap	Color	ESD		No.
20x20 (2x)	Signal gray		100	**3 842 548 742**
20x20 (2x)	Black	⚠	20	**3 842 548 743**
Material:	PP			

Quick & Easy (p. 2-7, see fold-out section)

20x40	3 842 993 696 / ...
Length L (mm)	50 ... 3000
Standard profile finishing (note minimum length, p. 2-10)	M6 / D5.8 / D8 / DB8
Customized profile finishing ($L_{max\ i}$ = 2300 mm)	DI / DIS / MT / MTS / MI / MIS / DG[1]

[1] DG_{max} = 45°; L_{min1} / L_{min2} = 370 / 440 mm

20x60

A = 3,5 cm²
I_x = 14,2 cm⁴
I_y = 1,7 cm⁴
W_x = 4,7 cm³
W_y = 1,7 cm³
m = 0,9 kg/m

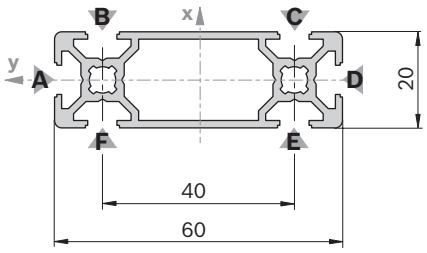

19175

20x60		L (mm)	No.
1 pc		50 ... 3000	**3 842 992 992 / L**
16 pcs		3000	**3 842 537 819**

Cover cap	Color	ESD		No.
20x60 (1x)	Signal gray		20	**3 842 548 828**
20x60 (1x)	Black	⚠	20	**3 842 548 829**
Material:	PP			

Quick & Easy (p. 2-7, see fold-out section)

20x60	3 842 993 698 / ...
Length L (mm)	50 ... 3000
Standard profile finishing (note minimum length, p. 2-10)	M6 / D5.8 (B,C,E,F)[1] / D8 (B,C,E,F)[1] / DB8
Customized profile finishing ($L_{max\ i}$ = 2300 mm)	DI / DIS / MT / MTS / MI / MIS / DG[2]

[1] For the specified slots
[2] DG_{max} = 45°; L_{min1} / L_{min2} = 404 /508 mm

20x40x40

A = 4,2 cm²
I_x = 6,0 cm⁴
I_y = 6,0 cm⁴
W_x = 2,6 cm³
W_y = 2,6 cm³
m = 1,1 kg/m

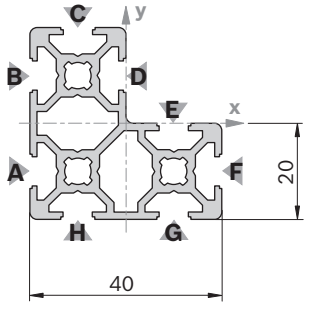

19176

20x40x40		L (mm)	No.
1 pc		50 ... 3000	**3 842 992 991 / L**
16 pcs		3000	**3 842 537 818**

Cover cap	Color	ESD		No.
20x20 (3x)	Signal gray		100	**3 842 548 742**
20x20 (3x)	Black	⚠	20	**3 842 548 743**
Material:	PP			

Quick & Easy (p. 2-7, see fold-out section)

20x40x40	3 842 993 697 / ...
Length L (mm)	50 ... 3000
Standard profile finishing (note minimum length, p. 2-10)	M6 / D5.8 / D8 / DB8
Customized profile finishing ($L_{max\ i}$ = 2300 mm)	DI / DIS / MT / MTS / MI / MIS / DG[1]

[1] DG_{max} = 45°; L_{min1} / L_{min2} = 370 / 440 mm

10x40

A = 2,1 cm²
I_x = 3,2 cm⁴
I_y = 0,2 cm⁴
W_x = 1,6 cm³
W_y = 0,4 cm³
m = 0,6 kg/m

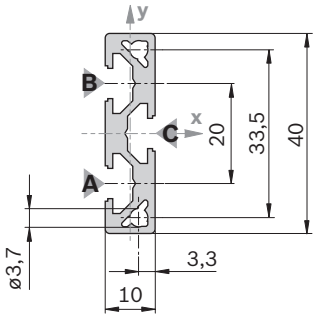

19177

Cover cap	Color	ESD		No.
10x40 (1x)	Signal gray		20	**3 842 548 766**
10x40 (1x)	Black		20	**3 842 548 767**
Material:	PP			

10x40		L (mm)	No.
1 pc		50 ... 3000	**3 842 993 077 / L**
10 pcs		3000	**3 842 526 817**

Quick & Easy (p. 2-7, see fold-out section)

10x40	3 842 993 683 / ...
Length L (mm)	50 ... 3000
Standard profile finishing (note minimum length, p. 2-10)	D5.8 / D8
Customized profile finishing	–

Strut profiles with 8 mm slot

Strut profiles with a 8 mm slot are suitable for medium loads, such as material shuttles, light fixtures, frames and partition walls.

Profile 30x60x60 is suitable for constructing showcases and flow racks.
Attractive covers and hoods can be designed with radius profiles.

Slot, modular dimensions, central bore

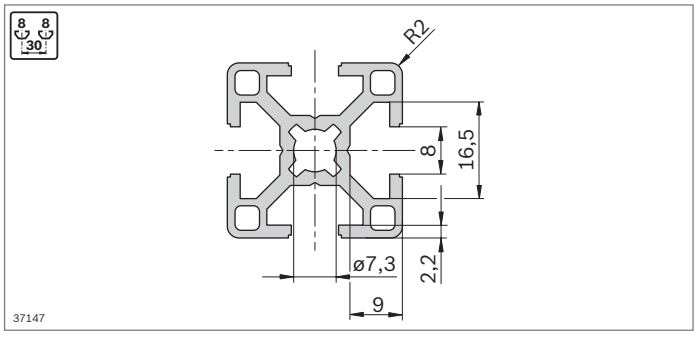

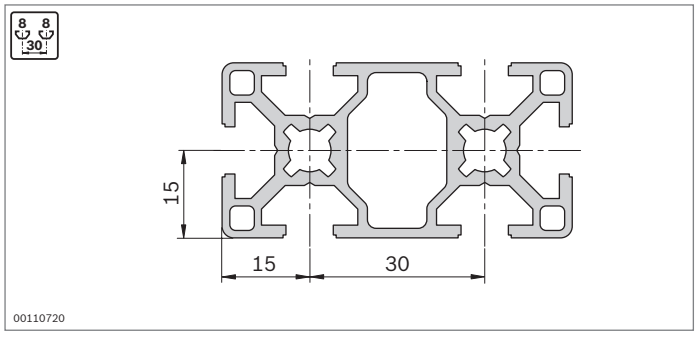

Profile finishing

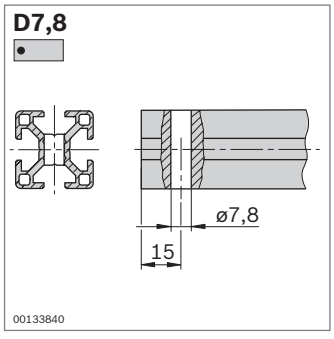

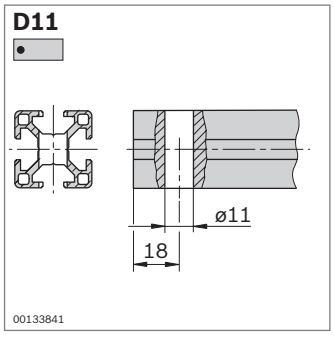

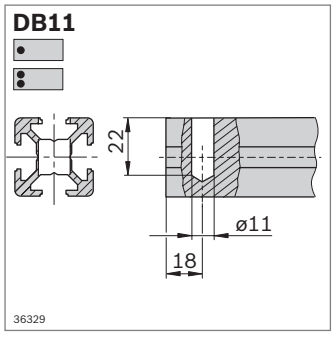

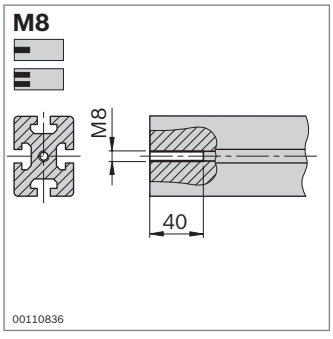

Minimum profile lengths (mm) for Quick & Easy standard profile finishing on one or both sides

	–	M8	D7.8	D11/DB11
–	50	50	50	50
M8	50	80	62	70
D7.8	50	62	60	50
D11/DB11	50	70	50	60

Reduced maximum profile lengths $L_{max\ i}$ at customized profile finishing

L_{max} (mm)	$L_{max\ i}$ (mm)
6070	5400
3000	2300
2000	1300

30x30

A = 3,1 cm²
I_x = 2,8 cm⁴
I_y = 2,8 cm⁴
W_x = 1,8 cm³
W_y = 1,8 cm³
m = 0,9 kg/m

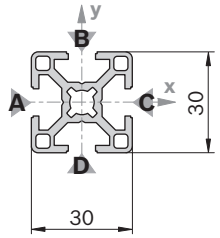

19178

30x30		L (mm)	No.
1 pc		50 ... 6070	**3 842 990 720 / L**
1 pc	M8	50 ... 6000	**3 842 990 721 / L**
1 pc	M8 M8	80 ... 6000	**3 842 990 723 / L**
1 pc	M8 D11	70 ... 6000	**3 842 990 724 / L**
1 pc	D7,8 D7,8	60 ... 6000	**3 842 992 965 / L**
1 pc	D11	50 ... 6000	**3 842 990 722 / L**
1 pc	D11 D11	60 ... 6000	**3 842 990 725 / L**
1 pc	D11 D11V	60 ... 6000	**3 842 990 726 / L**
20 pcs		6070	**3 842 557 206**

Cover cap	Color	ESD		No.
30x30 (1x)	Signal gray		100	**3 842 548 744**
30x30 (1x)	Black	⚠	20	**3 842 548 745**
Material:	PP			

Cover cap with hole	Color	ESD		No.
30x30 (1x)	Signal gray		20	**3 842 548 774**
30x30 (1x)	Black	⚠	20	**3 842 548 775**
Material:	PP			

Cover cap ZN	ESD	No.	FS
30x30-ZN	⚠	**3 842 518 204**	FS1
Material:	Cover cap: Diecast zinc Fastening material: Steel; galvanized		

Quick & Easy (p. 2-7, see fold-out section)

30x30	3 842 993 703 / ...
Length L (mm)	50 ... 6070
Standard profile finishing L_{max} = 6000 mm (note minimum length, p. 2-15)	M8 / D7.8 / D11 / DB11
Customized profile finishing ($L_{max\ i}$ = 5400 mm)	DI / DIS / MT / MTS / MI / MIS / DG[1]

[1] DG_{max} = 45°; L_{min1} / L_{min2} = 352 / 404 mm

FS1

DIN 7991 M4x16

30x30 1N

A = 3,7 cm²
I_x = 3,1 cm⁴
I_y = 3,5 cm⁴
W_x = 2,0 cm³
W_y = 2,3 cm³
m = 1,0 kg/m

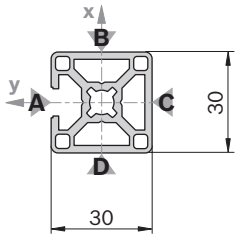

19179

Cover cap: see 30x30

30x30 1N		L (mm)	No.
1 pc		50 ... 6070	**3 842 992 397 / L**
20 pcs		6070	**3 842 557 208**

Quick & Easy (p. 2-7, see fold-out section)

30x30 1N	3 842 993 704 / ...
Length L (mm)	50 ... 6070
Standard profile finishing L_{max} = 6000 mm (note minimum length, p. 2-15)	M8 / D7.8 / D11 / DB11
Customized profile finishing ($L_{max\ i}$ = 5400 mm)	DI / DIS / MT / MTS / MI / MIS / DG[1]

[1] DG_{max} = 45°; L_{min1} / L_{min2} = 352 / 404 mm

30x30 2N

A = 3,5 cm²
I_x = 2,8 cm⁴
I_y = 3,5 cm⁴
W_x = 2,1 cm³
W_y = 2,7 cm³
m = 1,0 kg/m

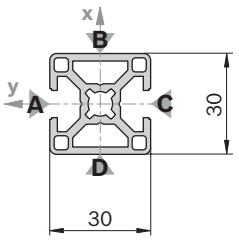

19180

Cover cap: see 30x30

30x30 2N		L (mm)	No.
1 pc		50 ... 6070	**3 842 992 399 / L**
20 pcs		6070	**3 842 557 220**

Quick & Easy (p. 2-7, see fold-out section)

30x30 2N	3 842 993 705 / ...
Length L (mm)	50 ... 6070
Standard profile finishing L_{max} = 6000 mm (note minimum length, p. 2-15)	M8 / D7.8 / D11 / DB11
Customized profile finishing ($L_{max\ i}$ = 5400 mm)	DI / DIS / MT / MTS / MI / MIS / DG[1]

[1] DG_{max} = 45°; L_{min1} / L_{min2} = 352 / 404 mm

30x30 2NVS

A = 3,5 cm²
I_x = 3,1 cm⁴
I_y = 3,1 cm⁴
W_x = 2,0 cm³
W_y = 2,0 cm³
m = 1,0 kg/m

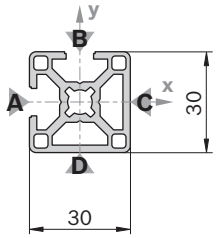

19181

Cover cap: see 30x30

30x30 2NVS		L (mm)	No.
1 pc		50 ... 6070	**3 842 992 398 / L**
20 pcs		6070	**3 842 557 209**

Quick & Easy (p. 2-7, see fold-out section)

30x30 2NVS	3 842 993 706 / ...
Length L (mm)	50 ... 6070
Standard profile finishing L_{max} = 6000 mm (note minimum length, p. 2-15)	M8 / D7.8 / D11 / DB11
Customized profile finishing ($L_{max\ i}$ = 5400 mm)	DI / DIS / MT / MTS / MI / MIS / DG[1)]

[1)] DG_{max} = 45°; L_{min1} / L_{min2} = 352 / 404 mm

30x30 3N

A = 3,3 cm²
I_x = 3,1 cm⁴
I_y = 2,8 cm⁴
W_x = 2,3 cm³
W_y = 2,1 cm³
m = 0,9 kg/m

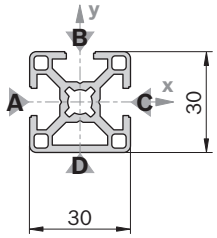

19182

Cover cap: see 30x30

30x30 3N		L (mm)	No.
1 pc		50 ... 6070	**3 842 992 400 / L**
20 pcs		6070	**3 842 557 221**

Quick & Easy (p. 2-7, see fold-out section)

30x30 3N	3 842 993 707 / ...
Length L (mm)	50 ... 6070
Standard profile finishing L_{max} = 6000 mm (note minimum length, p. 2-15)	M8 / D7.8 / D11 / DB11
Customized profile finishing ($L_{max\ i}$ = 5400 mm)	DI / DIS / MT / MTS / MI / MIS / DG[1)]

[1)] DG_{max} = 45°; L_{min1} / L_{min2} = 352 / 404 mm

30x30°

A = 3,7 cm²
I_x = 3,5 cm⁴
I_y = 3,6 cm⁴
W_x = 2,0 cm³
W_y = 1,9 cm³
m = 1,0 kg/m

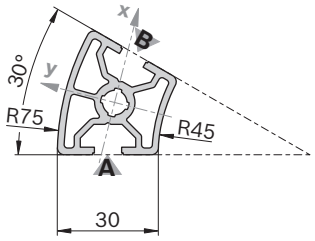

19183

30x30°		L (mm)	No.
1 pc		50 ... 6070	**3 842 993 010 / L**
20 pcs		6070	**3 842 557 951**

Quick & Easy (p. 2-7, see fold-out section)

30x30°	3 842 993 708 / ...
Length L (mm)	50 ... 6070
Standard profile finishing L_{max} = 6000 mm (note minimum length, p. 2-15)	M8
Customized profile finishing	–

Cover cap	Color	ESD		No.
30x30° (1x)	Signal gray		20	**3 842 551 008**
30x30° (1x)	Black	✓	20	**3 842 551 009**
Material:	PP			

30x45°

A = 4,0 cm²
I_x = 3,6 cm⁴
I_y = 5,1 cm⁴
W_x = 2,1 cm³
W_y = 2,3 cm³
m = 1,1 kg/m

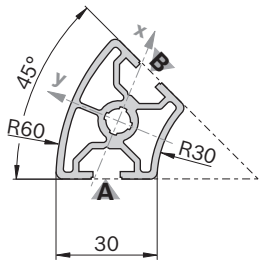

19184

30x45°		L (mm)	No.
1 pc		50 ... 6070	**3 842 993 011 / L**
20 pcs		6070	**3 842 557 952**

Quick & Easy (p. 2-7, see fold-out section)

30x45°	3 842 993 711 / ...
Length L (mm)	50 ... 6070
Standard profile finishing L_{max} = 6000 mm (note minimum length, p. 2-15)	M8
Customized profile finishing	–

Cover cap	Color	ESD		No.
30x45° (1x)	Signal gray		20	**3 842 551 010**
30x45° (1x)	Black	⚠	20	**3 842 551 011**
Material:	PP			

30x60°

A = 3,6 cm²
I_x = 3,0 cm⁴
I_y = 4,1 cm⁴
W_x = 1,7 cm³
W_y = 1,9 cm³
m = 1,0 kg/m

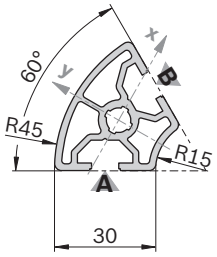

19185

30x60°		L (mm)	No.
1 pc		50 ... 6070	**3 842 993 012 / L**
20 pcs		6070	**3 842 557 953**

Quick & Easy (p. 2-7, see fold-out section)

30x60°	3 842 993 714 / ...
Length L (mm)	50 ... 6070
Standard profile finishing L_{max} = 6000 mm (note minimum length, p. 2-15)	M8
Customized profile finishing	–

Cover cap	Color	ESD		No.
30x60° (1x)	Signal gray		20	**3 842 551 012**
30x60° (1x)	Black	⚠	20	**3 842 551 013**
Material:	PP			

30x30 R

A = 2,9 cm²
I_x = 2,3 cm⁴
I_y = 2,3 cm⁴
W_x = 1,4 cm³
W_y = 1,4 cm³
m = 0,8 kg/m

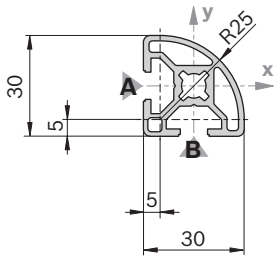

19186

30x30 R		L (mm)	No.
1 pc		50 ... 6070	**3 842 992 896 / L**
20 pcs		6070	**3 842 557 947**

Quick & Easy (p. 2-7, see fold-out section)

30x30 R	3 842 993 709 / ...
Length L (mm)	50 ... 6070
Standard profile finishing L_{max} = 6000 mm (note minimum length, p. 2-15)	M8 / DB11
Customized profile finishing	–

Cover cap	Color	ESD		No.
30x30 R (1x)	Signal gray		20	**3 842 548 776**
30x30 R (1x)	Black	⚠	20	**3 842 548 777**
Material:	PP			

30x60

A = 5,5 cm²
I_x = 19,6 cm⁴
I_y = 5,1 cm⁴
W_x = 7,0 cm³
W_y = 3,9 cm³
m = 1,5 kg/m

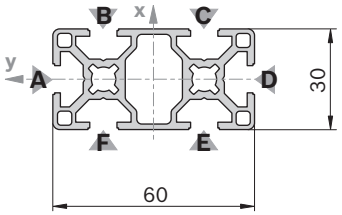

19187

30x60			L (mm)	No.
1 pc			50 ... 6070	**3 842 992 457 / L**
1 pc	M8		50 ... 6000	**3 842 992 458 / L**
1 pc	M8	M8	80 ... 6000	**3 842 992 926 / L**
1 pc	D11		50 ... 6000	**3 842 992 459 / L**
1 pc	D11	D11	60 ... 6000	**3 842 992 460 / L**
1 pc	D11	D11V	60 ... 6000	**3 842 992 463 / L**
1 pc	D11V	D11V	60 ... 6000	**3 842 992 462 / L**
10 pcs			6070	**3 842 557 205**

Profile finishing: M8: in all core holes
D11: in slots B/F, C/E
D11V: in slots A/D

Cover cap	Color	ESD		No.
30x30 (2x)	Signal gray		100	**3 842 548 744**
30x60 (1x)	Signal gray		20	**3 842 548 780**
30x30 (2x)	Black		20	**3 842 548 745**
30x60 (1x)	Black		20	**3 842 548 781**
Material:	PP			

Cover cap with hole	Color	ESD		No.
30x30 (2x)	Signal gray		20	**3 842 548 774**
30x30 (2x)	Black		20	**3 842 548 775**
Material:	PP			

Quick & Easy (p. 2-7, see fold-out section)

30x60	3 842 993 712 / ...
Length L (mm)	50 ... 6070
Standard profile finishing L_{max} = 6000 mm (note minimum length, p. 2-15)	M8 / D7.8 / D11 / DB11
Customized profile finishing ($L_{max\ i}$ = 5400 mm)	DI / DIS / MT / MTS / MI / MIS / DG[1)]

[1)] DG_{max} = 45°; L_{min1} / L_{min2} = 404 / 508 mm

30x60 4N

A = 5,8 cm²
I_x = 20,2 cm⁴
I_y = 5,5 cm⁴
W_x = 6,7 cm³
W_y = 3,8 cm³
m = 1,6 kg/m

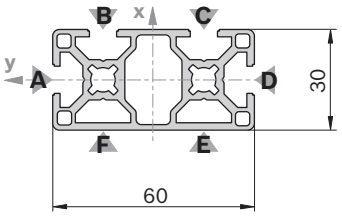

19188

Cover cap: see 30x60

30x60 4N			L (mm)	No.
1 pc			50 ... 6070	**3 842 993 420 / L**
10 pcs			6070	**3 842 536 472**

Quick & Easy (p. 2-7, see fold-out section)

30x60 4N	3 842 993 713 / ...
Length L (mm)	50 ... 6070
Standard profile finishing L_{max} = 6000 mm (note minimum length, p. 2-15)	M8 / D7.8 / D11 / DB11
Customized profile finishing ($L_{max\ i}$ = 5400 mm)	DI / DIS / MT / MTS / MI / MIS / DG[1)]

[1)] DG_{max} = 45°; L_{min1} / L_{min2} = 404 / 508 mm

30x60x60

A = 8,2 cm²
I_x = 26,2 cm⁴
I_y = 26,2 cm⁴
W_x = 7,6 cm³
W_y = 7,6 cm³
m = 2,2 kg/m

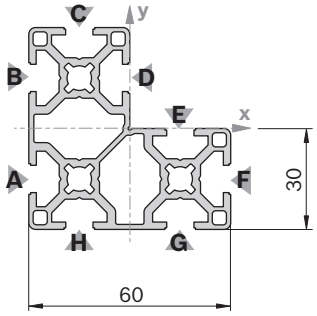

19189

Cover cap	Color	ESD		No.
30x30 (3x)	Signal gray		100	**3 842 548 744**
30x30 (3x)	Black		20	**3 842 548 745**
Material:	PP			

30x60x60			L (mm)	No.
1 pc			50 ... 6070	**3 842 993 016 / L**
20 pcs			6070	**3 842 557 241**

Quick & Easy (p. 2-7, see fold-out section)

30x60x60	3 842 993 715 / ...
Length L (mm)	50 ... 6070
Standard profile finishing L_{max} = 6000 mm (note minimum length, p. 2-15)	M8 / D7.8 / D11 / DB11
Customized profile finishing ($L_{max\ i}$ = 5400 mm)	DI / DIS / MT / MTS / MI / MIS / DG[1)]

[1)] DG_{max} = 45°; L_{min1} / L_{min2} = 404 / 508 mm

30x90

A = 7,7 cm²
I_x = 60,7 cm⁴
I_y = 7,3 cm⁴
W_x = 13,5 cm³
W_y = 4,9 cm³
m = 2,1 kg/m

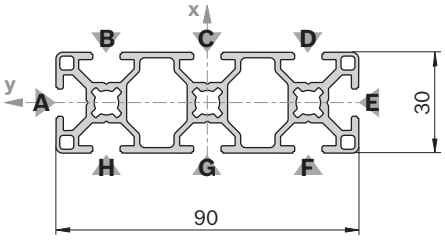

19190

Cover cap	Color	ESD		No.
30x30 (3x)	Signal gray		100	**3 842 548 744**
30x30 (3x)	Black	⚠	20	**3 842 548 745**
Material:	PP			

Cover cap with hole	Color	ESD		No.
30x30 (3x)	Signal gray		20	**3 842 548 774**
30x30 (3x)	Black	⚠	20	**3 842 548 775**
Material:	PP			

30x90		L (mm)	No.
20 pcs		6070	**3 842 541 937**

Quick & Easy (p. 2-7, see fold-out section)

30x90	3 842 993 762 / ...
Length L (mm)	50 ... 6070
Standard profile finishing L_{max} = 6000 mm (note minimum length, p. 2-15)	M8 / D7.8 (B,C,D,F, G,H)[1]/ D11 (B,C,D, F,G,H)[1] / DB11
Customized profile finishing ($L_{max\ i}$ = 5400 mm)	DI / DIS / MT / MTS / MI / MIS / DG[2]

[1] For the specified slots

[2] DG_{max} = 45°; L_{min1} / L_{min2} = 150 / 150 mm

30x120

A = 9,9 cm²
I_x =136,3 cm⁴
I_y = 9,6 cm⁴
W_x = 22,7 cm³
W_y = 6,4 cm³
m = 2,7 kg/m

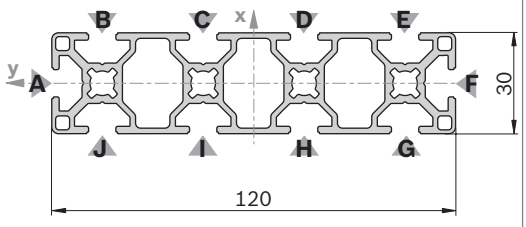

19191

Cover cap	Color	ESD		No.
30x30 (4x)	Signal gray		100	**3 842 548 744**
30x60 (2x)	Signal gray		20	**3 842 548 780**
30x30 (4x)	Black	⚠	20	**3 842 548 745**
30x60 (2x)	Black	⚠	20	**3 842 548 781**
Material:	PP			

Cover cap with hole	Color	ESD		No.
30x30 (4x)	Signal gray		20	**3 842 548 774**
30x30 (4x)	Black	⚠	20	**3 842 548 775**
Material:	PP			

30x120		L (mm)	No.
20 pcs		6070	**3 842 541 939**

Quick & Easy (p. 2-7, see fold-out section)

30x120	3 842 993 763 / ...
Length L (mm)	50 ... 6070
Standard profile finishing L_{max} = 6000 mm (note minimum length, p. 2-15)	M8 / D7.8 (B,C,D,E, G,H,I,J)[1] / D11 (B,C,D, E,G,H,I,J)[1] / DB11
Customized profile finishing ($L_{max\ i}$ = 5400 mm)	DI / DIS / MT / MTS / MI / MIS / DG[2]

[1] For the specified slots

[2] DG_{max} = 45°; L_{min1} / L_{min2} = 150 / 150 mm

30x45

A = 4,0 cm²
I_x = 8,1 cm⁴
I_y = 3,9 cm⁴
W_x = 3,9 cm³
W_y = 2,9 cm³
m = 1,1 kg/m

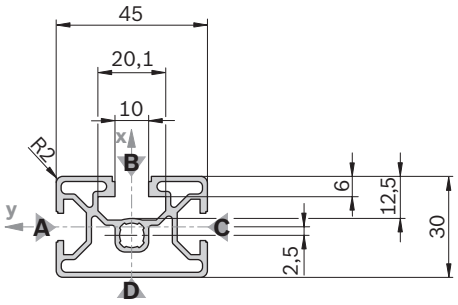

19192

Cover cap	Color	ESD		No.
30x45 (1x)	Signal gray		20	**3 842 548 778**
30x45 (1x)	Black	⚠	20	**3 842 548 779**
Material:	PP			

30x45		L (mm)	No.
1 pc		50 ... 6070	**3 842 992 430 / L**
1 pc	M8	50 ... 6000	**3 842 992 431 / L**
18 pcs		6070	**3 842 557 203**

Quick & Easy (p. 2-7, see fold-out section)

30x45	3 842 993 710 / ...
Length L (mm)	50 ... 6070
Standard profile finishing L_{max} = 6000 mm (note minimum length,p. 2-15)	M8 / D7.8 (A,C)[1] / D9.8 (B)[1]/ D11 (A,C)[1] / DB11 / D17 (B)[1]
Customized profile finishing ($L_{max\ i}$ = 5400 mm)	DI / DIS / MT / MTS / MI / MIS / DG[2]

[1] For the specified slots
[2] DG_{max} = 45°; L_{min1} / L_{min2} = 378 / 456 mm

60x60 8N

A = 9,8 cm²
I_x = 39,7 cm⁴
I_y = 39,7 cm⁴
W_x = 13,2 cm³
W_y = 13,2 cm³
m = 2,6 kg/m

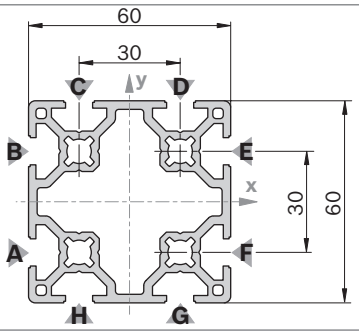

19193

Cover cap	Color	ESD		No.
60x60 8N (1x)	Signal gray		20	**3 842 551 046**
60x60 8N (1x)	Black	⚠	20	**3 842 551 047**
Material:	PP			

60x60 8N		L (mm)	No.
1 pc		50 ... 6070	**3 842 993 033 / L**
20 pcs		6070	**3 842 535 176**

Quick & Easy (p. 2-7, see fold-out section)

60x60 8N	3 842 993 669 / ...
Length L (mm)	50 ... 6070
Standard profile finishing L_{max} = 6000 mm (note minimum length, p. 2-15)	M8 / D7.8 / D11 / DB11
Customized profile finishing ($L_{max\ i}$ = 5400 mm)	DI / DIS / MT / MTS / MI / MIS / DG[2]

[2] DG_{max} = 45°; L_{min1} / L_{min2} = 404 / 508 mm

11x20

A = 1,0 cm²
I_x = 0,5 cm⁴
I_y = 0,1 cm⁴
W_x = 0,7 cm³
W_y = 0,3 cm³
m = 0,3 kg/m

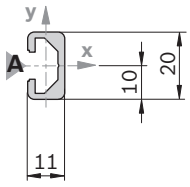

19194

Cover cap	Color	ESD		No.
11x20 (1x)	Signal gray		20	**3 842 551 044**
11x20 (1x)	Black	⚠	20	**3 842 551 045**
Material:	PP			

11x20		L (mm)	No.
1 pc		50 ... 2000	**3 842 992 476 / L**
10 pcs		2000	**3 842 513 581**

Quick & Easy (p. 2-7, see fold-out section)

11x20	3 842 993 688 / ...
Length L (mm)	50 ... 2000
Standard profile finishing (note minimum length, p. 2-15)	D7.8 / D11
Customized profile finishing	–

15x120

A = 9,0 cm²
I_x = 110,4 cm⁴
I_y = 2,2 cm⁴
W_x = 18,4 cm³
W_y = 2,7 cm³
m = 2,4 kg/m

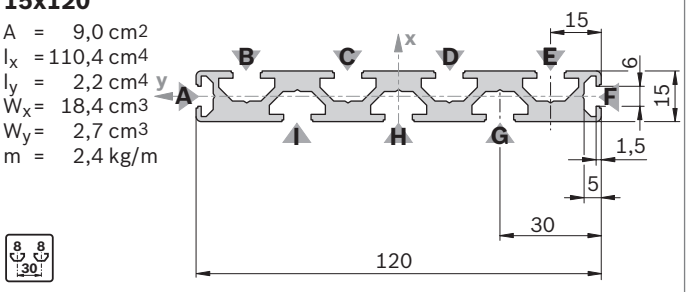

19195

Cover cap	Color	ESD		No.
15x120 (1x)	Signal gray		20	**3 842 548 768**
15x120 (1x)	Black		20	**3 842 548 769**
Material:	PP			

15x120		L (mm)	No.
1 pc		50 ... 3000	**3 842 993 078 / L**
10 pcs		3000	**3 842 537 821**

Quick & Easy (p. 2-7, see fold-out section)

15x120	3 842 993 684 / ...
Length L (mm)	80 ... 3000
Standard profile finishing (note minimum length, p. 2-15)	D7.8 (B,C,D,E,G,H,I)[1] / D11 (B,C,D,E,G,H,I)[1]
Customized profile finishing ($L_{max\ i}$ = 2300 mm)	DI / DIS / MT / MTS / MI / MIS

[1] For the specified slots

Strut profiles with 10 mm slot

The Rexroth modular profile system, with 10 mm slots in the modular dimensions 40 mm, 45 mm, 50 mm, and 60 mm, covers all conventional profile dimensions on the world market.

Thanks to their computer-optimized design, the strut profiles L with 10 mm slot (modular dimensions 40 mm, 45 mm, and 50 mm, e.g. 50x50L) combine high strengths with minimum use of materials. This gives you a cost-effective and stable solution for the construction of tables, protection devices or frames, for instance.

Slot, modular dimensions, central bore

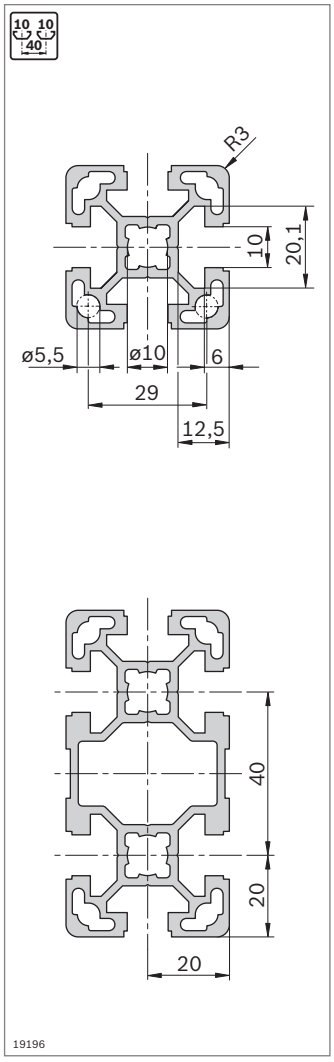

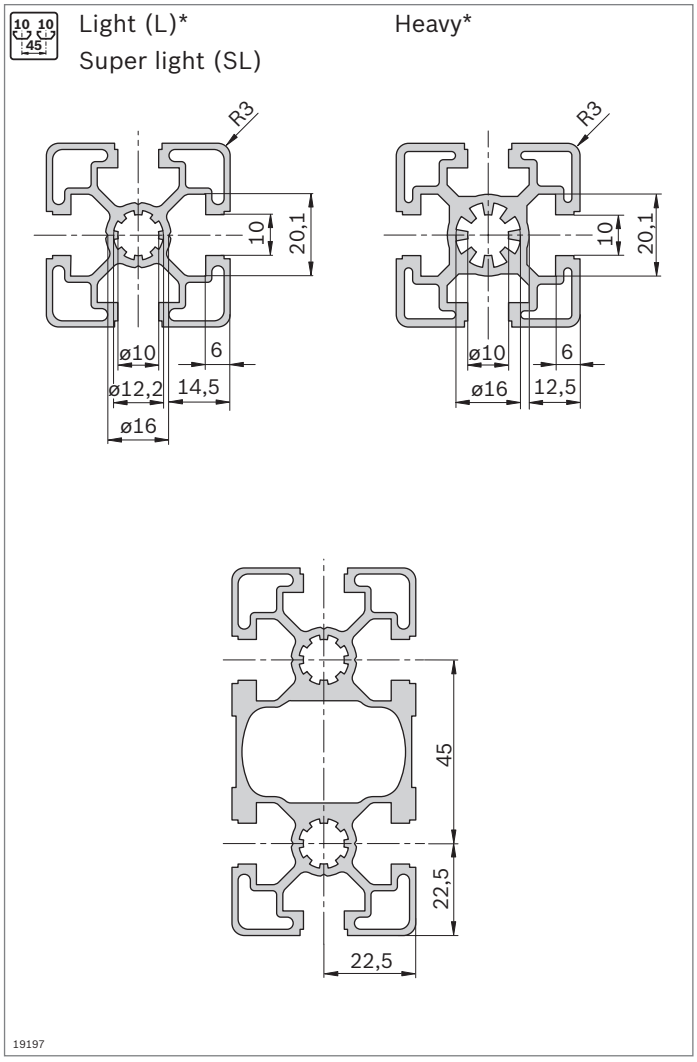

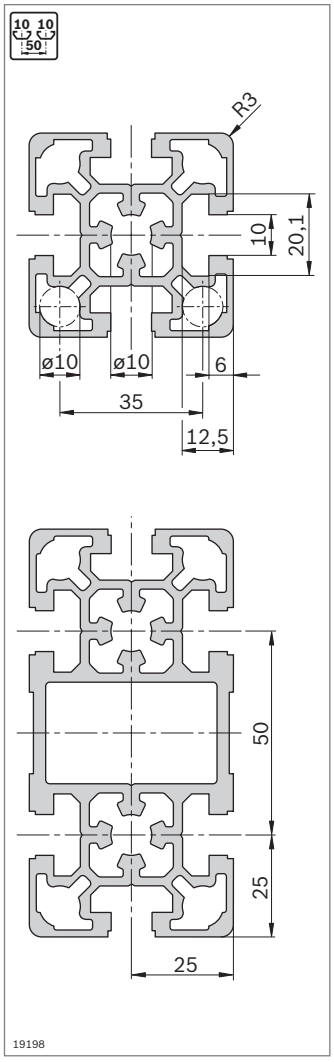

*) The following L-profiles have a “heavy” slot geometry:
45x90x90L; 45x90x90L 4N; 90x90L; 90x90L 4N; 90x90L 4NVS; 90x180L

Minimum profile lengths (mm) for Quick & Easy standard profile finishing on one or both sides

	–	M12	M16	D9.8	D17/DB17	F1
–	50	60	120	50	60	60
M12	60	110	180	90	90	110
M16	120	180	240	150	170	170
D9.8	50	90	150	80	70	90
D17/DB17	60	90	170	70	80	90
F1	60	110	170	90	90	80

Reduced maximum profile lengths $L_{max\ i}$ at customized profile finishing

L_{max} (mm)	$L_{max\ i}$ (mm)
6070	5400
3000	2300
2000	1300

For applications with high loads, we recommend especially stable profiles with 10 mm slots, e.g. for heavy work tables, fixtures, machine frames, transport shuttles, protective enclosures, and handling systems.

Due to its very sturdy design, this slot allows maximum strength connections.

Profile finishing

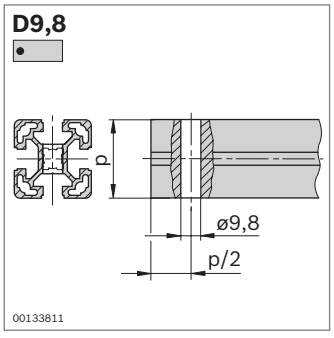

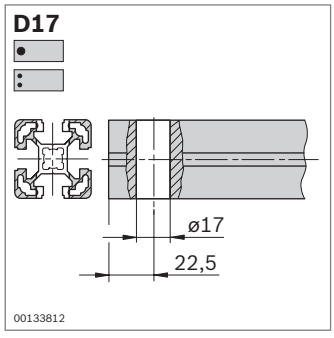

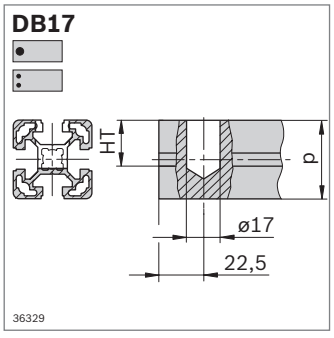

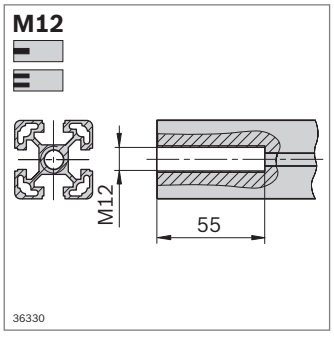

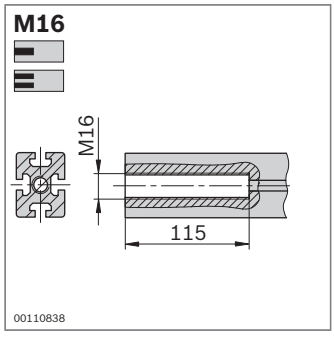

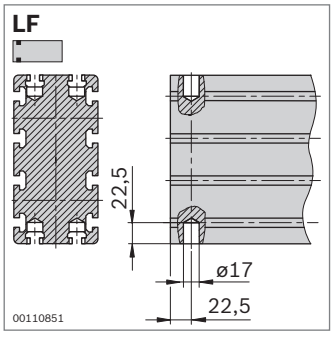

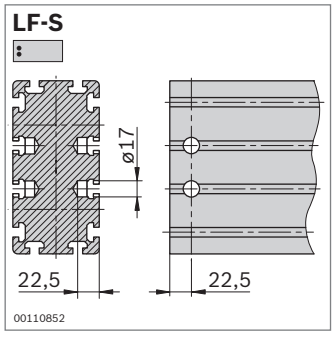

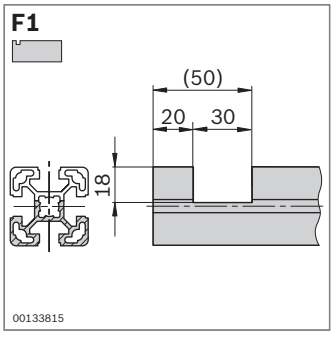

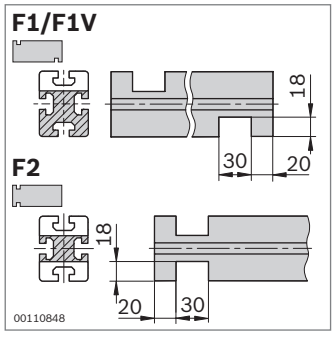

40x40L

A = 5,6 cm²
I_x = 9,1 cm⁴
I_y = 9,1 cm⁴
W_x = 4,5 cm³
W_y = 4,5 cm³
m = 1,5 kg/m

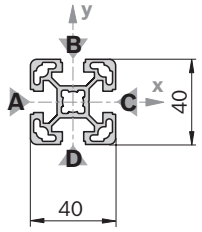



19199

40x40L		L (mm)	No.
1 pc		50 ... 6070	**3 842 993 120 / L**
1 pc	M12	60 ... 6000	**3 842 993 121 / L**
1 pc	M12 M12	110 ... 6000	**3 842 993 122 / L**
1 pc	M12 D17	90 ... 6000	**3 842 993 123 / L**
1 pc	D17	60 ... 6000	**3 842 993 124 / L**
1 pc	D17 D17	80 ... 6000	**3 842 993 125 / L**
1 pc	D17 D17V	80 ... 6000	**3 842 993 126 / L**
1 pc	D9,8 D9,8	80 ... 6000	**3 842 993 129 / L**
20 pcs		6070	**3 842 529 339**

Cover cap	Color	ESD		No.
40x40 (1x)	Signal gray		100	**3 842 548 746**
40x40 (1x)	Black	⚠	20	**3 842 548 747**
Material:	PP			

Cover cap with hole	Color	ESD		No.
40x40 (1x)	Signal gray		20	**3 842 548 782**
40x40 (1x)	Black	⚠	20	**3 842 548 783**
Material:	PP			

Cover cap ZN	ESD	No.	FS
40x40-ZN	⚠	**3 842 541 807**	FS2
Material:	Cover cap: Diecast zinc Fastening material: Steel; galvanized		

Quick & Easy (p. 2-7, see fold-out section)

40x40L	3 842 993 724 / ...
Length L (mm)	50 ... 6070
Standard profile finishing L_{max} = 6000 mm (note minimum length, p. 2-24)	M12 / D9.8 / D17 / DB17 / F1 (A)[1]
Customized profile finishing ($L_{max\ i}$ = 5400 mm)	DI / DIS / MT / MTS / MI / MIS / DG[2]

[1] For the specified slots
[2] DG_{max} = 45°; L_{min1} / L_{min2} = 370 / 440 mm

FS2



DIN 7991
M6x16

40x40L 0N

A = 6,3 cm²
I_x = 10,4 cm⁴
I_y = 10,4 cm⁴
W_x = 5,2 cm³
W_y = 5,2 cm³
m = 1,7 kg/m

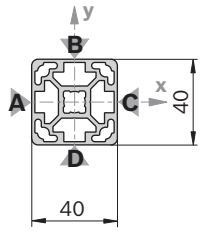



19200

Cover cap: see 40x40

40x40L 0N		L (mm)	No.
20 pcs		6070	**3 842 540 954**

Quick & Easy (p. 2-7, see fold-out section)

40x40L 0N	3 842 993 760 / ...
Length L (mm)	50 ... 6070
Standard profile finishing L_{max} = 6000 mm (note minimum length, p. 2-24)	M12 / D9.8 / D17 / DB17
Customized profile finishing ($L_{max\ i}$ = 5400 mm)	DI / DIS / MT / MTS / MI / MIS / DG[1]

[1] DG_{max} = 45°; L_{min1} / L_{min2} = 370 / 440 mm

40x40L 1N

A = 6,1 cm²
I_x = 9,8 cm⁴
I_y = 10,3 cm⁴
W_x = 4,7 cm³
W_y = 5,1 cm³
m = 1,7 kg/m

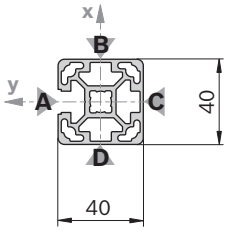



19201

Cover cap: see 40x40

40x40L 1N		L (mm)	No.
1 pc		50 ... 6070	**3 842 993 185 / L**
1 pc	M12 M12	110 ... 6000	**3 842 993 186 / L**
20 pcs		6070	**3 842 529 361**

Quick & Easy (p. 2-7, see fold-out section)

40x40L 1N	3 842 993 719 / ...
Length L (mm)	50 ... 6070
Standard profile finishing L_{max} = 6000 mm (note minimum length, p. 2-24)	M12 / D9.8 / D17 / DB17
Customized profile finishing ($L_{max\ i}$ = 5400 mm)	DI / DIS / MT / MTS / MI / MIS / DG[1]

[1] DG_{max} = 45°; L_{min1} / L_{min2} = 370 / 440 mm

40x40L 2N

A = 6,0 cm²
I_x = 9,0 cm⁴
I_y = 10,3 cm⁴
W_x = 4,5 cm³
W_y = 5,2 cm³
m = 1,6 kg/m

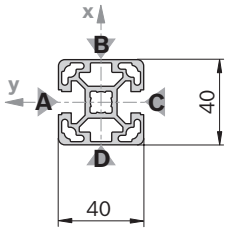



19202

Cover cap: see 40x40

40x40L 2N		L (mm)	No.
1 pc		50 ... 6070	**3 842 993 187 / L**
1 pc	M12 M12	110 ... 6000	**3 842 993 188 / L**
20 pcs		6070	**3 842 529 363**

Quick & Easy (p. 2-7, see fold-out section)

40x40L 2N	3 842 993 720 / ...
Length L (mm)	50 ... 6070
Standard profile finishing L_{max} = 6000 mm (note minimum length, p. 2-24)	M12 / D9.8 / D17 / DB17
Customized profile finishing ($L_{max\ i}$ = 5400 mm)	DI / DIS / MT / MTS / MI / MIS / DG[1)]

[1)] DG_{max} = 45°; L_{min1} / L_{min2} = 370 / 440 mm

40x40L 2NVS

A = 6,0 cm²
I_x = 9,7 cm⁴
I_y = 9,7 cm⁴
W_x = 4,9 cm³
W_y = 4,9 cm³
m = 1,6 kg/m

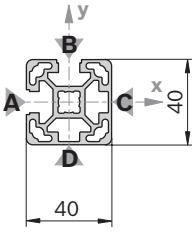



19203

Cover cap: see 40x40

40x40L 2NVS		L (mm)	No.
1 pc		50 ... 6070	**3 842 993 189 / L**
1 pc	M12 M12	110 ... 6000	**3 842 993 190 / L**
20 pcs		6070	**3 842 529 365**

Quick & Easy (p. 2-7, see fold-out section)

40x40L 2NVS	3 842 993 721 / ...
Length L (mm)	50 ... 6070
Standard profile finishing L_{max} = 6000 mm (note minimum length, p. 2-24)	M12 / D9.8 / D17 / DB17
Customized profile finishing ($L_{max\ i}$ = 5400 mm)	DI / DIS / MT / MTS / MI / MIS / DG[1)]

[1)] DG_{max} = 45°; L_{min1} / L_{min2} = 370 / 440 mm

40x40L 3N

A = 5,8 cm²
I_x = 9,7 cm⁴
I_y = 9,0 cm⁴
W_x = 4,8 cm³
W_y = 4,5 cm³
m = 1,6 kg/m

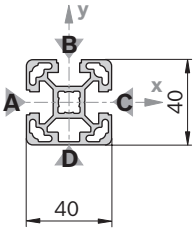



19204

Cover cap: see 40x40

40x40L 3N		L (mm)	No.
1 pc		50 ... 6070	**3 842 993 191 / L**
1 pc	M12 M12	110 ... 6000	**3 842 993 192 / L**
20 pcs		6070	**3 842 529 367**

Quick & Easy (p. 2-7, see fold-out section)

40x40L 3N	3 842 993 722 / ...
Length L (mm)	50 ... 6070
Standard profile finishing L_{max} = 6000 mm (note minimum length, p. 2-24)	M12 / D9.8 / D17 / DB17
Customized profile finishing ($L_{max\ i}$ = 5400 mm)	DI / DIS / MT / MTS / MI / MIS / DG[1)]

[1)] DG_{max} = 45°; L_{min1} / L_{min2} = 370 / 440 mm

40x30°

A = 6,2 cm²
I_x = 9,4 cm⁴
I_y = 11,8 cm⁴
W_x = 4,7 cm³
W_y = 5,9 cm³
m = 1,7 kg/m

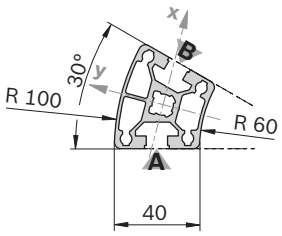



19205

40x30°		L (mm)	No.
1 pc		50 ... 6070	**3 842 993 195 / L**
12 pcs		6070	**3 842 529 371**

Quick & Easy (p. 2-7, see fold-out section)

40x30°	3 842 993 718 / ...
Length L (mm)	50 ... 6070
Standard profile finishing L_{max} = 6000 mm (note minimum length, p. 2-24)	M12
Customized profile finishing	–

Cover cap	Color	ESD		No.
40x30° (1x)	Signal gray		20	**3 842 551 014**
40x30° (1x)	Black	⚠	20	**3 842 551 015**
Material:	PP			

40x45°

A = 6,8 cm²
I_x = 9,9 cm⁴
I_y = 16,6 cm⁴
W_x = 5,0 cm³
W_y = 8,3 cm³
m = 1,8 kg/m

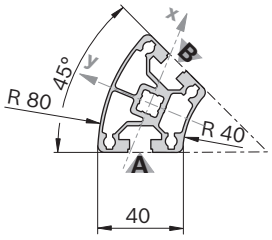



19206

40x45°		L (mm)	No.
1 pc		50 ... 6070	**3 842 993 197 / L**
12 pcs		6070	**3 842 529 373**

Quick & Easy (p. 2-7, see fold-out section)

40x45°	3 842 993 726 / ...
Length L (mm)	50 ... 6070
Standard profile finishing L_{max} = 6000 mm (note minimum length, p. 2-24)	M12
Customized profile finishing	–

Cover cap	Color	ESD		No.
40x45° (1x)	Signal gray		20	**3 842 551 016**
40x45° (1x)	Black	⚠	20	**3 842 551 017**
Material:	PP			

40x60°

A = 6,3 cm²
I_x = 8,7 cm⁴
I_y = 13,1 cm⁴
W_x = 4,3 cm³
W_y = 6,5 cm³
m = 1,7 kg/m

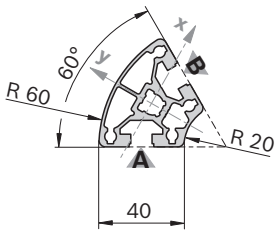



19207

40x60°		L (mm)	No.
1 pc		50 ... 6070	**3 842 993 198 / L**
12 pcs		6070	**3 842 529 375**

Quick & Easy (p. 2-7, see fold-out section)

40x60°	3 842 993 727 / ...
Length L (mm)	50 ... 6070
Standard profile finishing L_{max} = 6000 mm (note minimum length, p. 2-24)	M12
Customized profile finishing	–

Cover cap	Color	ESD		No.
40x60° (1x)	Signal gray		20	**3 842 551 018**
40x60° (1x)	Black	⚠	20	**3 842 551 019**
Material:	PP			

40x40L R

A = 5,0 cm²
I_x = 7,2 cm⁴
I_y = 7,2 cm⁴
W_x = 3,6 cm³
W_y = 3,6 cm³
m = 1,3 kg/m

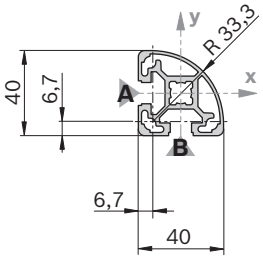

19208

40x40L R		L (mm)	No.
1 pc		50 ... 6070	**3 842 993 184 / L**
20 pcs		6070	**3 842 529 359**

Quick & Easy (p. 2-7, see fold-out section)

40x40L R	3 842 993 725 / ...
Length L (mm)	50 ... 6070
Standard profile finishing L_{max} = 6000 mm (note minimum length, p. 2-24)	M12 / DB17 (A,B)[1]
Customized profile finishing	–

[1] For the specified slots

Cover cap	Color	ESD		No.
40x40 R (1x)	Signal gray		20	**3 842 548 784**
40x40 R (1x)	Black		20	**3 842 548 785**
Material:	PP			

40x40 HR

A = 5,5 cm²
I_x = 8,1 cm⁴
I_y = 7,6 cm⁴
W_x = 4,0 cm³
W_y = 3,6 cm³
m = 1,5 kg/m

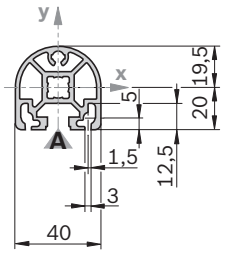

19209

40x40 HR			L (mm)	No.
1 pc			50 ... 6070	**3 842 993 256 / L**
1 pc	M12	M12	110 ... 6000	**3 842 993 257 / L**
20 pcs			6070	**3 842 529 381**

Quick & Easy (p. 2-7, see fold-out section)

40x40 HR	3 842 993 723 / ...
Length L (mm)	50 ... 6070
Standard profile finishing L_{max} = 6000 mm (note minimum length, p. 2-24)	M12 / DB17
Customized profile finishing ($L_{max\,i}$ = 5400 mm)	DI / DIS / MT / MTS / MI / MIS / DG[1]

[1] DG_{max} = 45°; L_{min1} / L_{min2} = 370 / 440 mm

Cover cap	Color	ESD		No.
40x40 HR (1x)	Signal gray		20	**3 842 548 786**
40x40 HR (1x)	Black		20	**3 842 548 787**
Material:	PP			

Cover cap with hole[1]	Color	ESD		No.
40x40 HR (1x)	Signal gray		20	**3 842 548 786**
40x40 HR (1x)	Black		20	**3 842 548 787**
Material:	PP			

[1] The cover cap is also suitable for use with a hole, which can be broken out

40x80L

A = 9,9 cm²
I_x = 63,4 cm⁴
I_y = 17,3 cm⁴
W_x = 15,9 cm³
W_y = 8,7 cm³
m = 2,7 kg/m

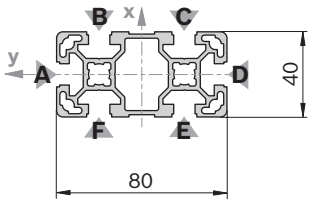

10 10 40

19210

40x80L		L (mm)	No.
1 pc		50 ... 6070	**3 842 993 130 / L**
1 pc	M12	60 ... 6000	**3 842 993 131 / L**
1 pc	M12 M12	110... 6000	**3 842 993 132 / L**
1 pc	D17 D17	80 ... 6000	**3 842 993 135 / L**
1 pc	D17 D17V	80 ... 6000	**3 842 993 136 / L**
1 pc	D17V	60 ... 6000	**3 842 993 137 / L**
1 pc	D17V D17V	80 ... 6000	**3 842 993 138 / L**
12 pcs		6070	**3 842 529 341**

Profile finishing: M12: in all core holes
D17: in slots B/F, C/E
D17V: in slots A/D

Cover cap	Color	ESD		No.
40x80 (1x)	Signal gray		20	**3 842 548 748**
40x80 (1x)	Black	⚠	20	**3 842 548 749**
Material:	PP			

Cover cap with hole	Color	ESD		No.
40x80 (1x)	Signal gray		20	**3 842 548 788**
40x80 (1x)	Black	⚠	20	**3 842 548 789**
Material:	PP			

Quick & Easy (p. 2-7, see fold-out section)

40x80L	3 842 993 728 / ...
Length L (mm)	50 ... 6070
Standard profile finishing L_{max} = 6000 mm (note minimum length, p. 2-24)	M12 / D9.8 / D17 / DB17 / F1 (A,D)[1]
Customized profile finishing ($L_{max\,i}$ = 5400 mm)	DI / DIS / MT / MTS / MI / MIS / DG[2]

[1] For the specified slots
[2] DG_{max} = 45°; L_{min1} / L_{min2} = 439 / 578 mm

40x80L 2N

A = 10,9 cm²
I_x = 66,6 cm⁴
I_y = 20,8 cm⁴
W_x = 16,6 cm³
W_y = 10,4 cm³
m = 2,9 kg/m

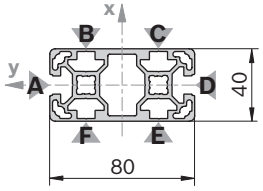

10 10 40

33094

Cover cap: see 40x80

40x80L 2N		L (mm)	No.
12 pcs		6070	**3 842 555 650**

Quick & Easy (p. 2-7, see fold-out section)

40x80L 2N	3 842 993 768 / ...
Length L (mm)	50 ... 6070
Standard profile finishing L_{max} = 6000 mm (note minimum length, p. 2-24)	M12 / D9.8 / D17 / DB17 / F1 (A,D)[1]
Customized profile finishing ($L_{max\,i}$ = 5400 mm)	DI / DIS / MT / MTS / MI / MIS / DG[2]

[1] For the specified slots
[2] DG_{max} = 45°; L_{min1} / L_{min2} = 439 / 578 mm

40x80L 4N

A = 10,4 cm²
I_x = 65,2 cm⁴
I_y = 19,1 cm⁴
W_x = 16,3 cm³
W_y = 9,9 cm³
m = 2,8 kg/m

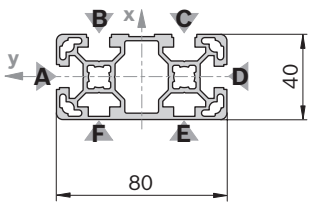

10 10 40

19211

Cover cap: see 40x80

40x80L 4N		L (mm)	No.
1 pc		50 ... 6070	**3 842 993 424 / L**
12 pcs		6070	**3 842 536 484**

Quick & Easy (p. 2-7, see fold-out section)

40x80L 4N	3 842 993 729 / ...
Length L (mm)	50 ... 6070
Standard profile finishing L_{max} = 6000 mm (note minimum length, p. 2-24)	M12 / D9.8 / D17 / DB17 / F1 (A,D)[1]
Customized profile finishing ($L_{max\,i}$ = 5400 mm)	DI / DIS / MT / MTS / MI / MIS / DG[2]

[1] For the specified slots
[2] DG_{max} = 45°; L_{min1} / L_{min2} = 439 / 578 mm

40x80L 2NVS

A = 10,7 cm²
I_x = 67,8 cm⁴
I_y = 19,0 cm⁴
W_x = 17,0 cm³
W_y = 9,5 cm³
m = 2,9 kg/m

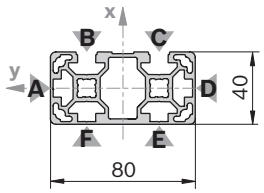

33093

Cover cap: see 40x80

40x80L 2NVS		L (mm)	No.
12 pcs		6070	**3 842 555 649**

Quick & Easy (p. 2-7, see fold-out section)

40x80 L 2NVS	3 842 993 767 / ...
Length L (mm)	50 ... 6070
Standard profile finishing L_{max} = 6000 mm (note minimum length, p. 2-24)	M12 / D9.8 / D17 / DB17
Customized profile finishing ($L_{max\ i}$ = 5400 mm)	DI / DIS / MT / MTS / MI / MIS / DG[1]

[1] DG_{max} = 45°; L_{min1} / L_{min2} = 439 / 578 mm

40x80L 3NVS

A = 10,6 cm²
I_x = 67,8 cm⁴
I_y = 19,0 cm⁴
W_x = 17,0 cm³
W_y = 9,5 cm³
m = 2,9 kg/m

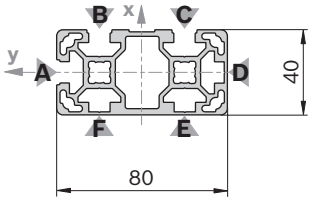

19212

Cover cap: see 40x80

40x80L 3NVS		L (mm)	No.
1 pc		50 ... 6070	**3 842 993 654 / L**
12 pcs		6070	**3 842 538 330**

Quick & Easy (p. 2-7, see fold-out section)

40x80L 3NVS	3 842 993 753 / ...
Length L (mm)	50 ... 6070
Standard profile finishing L_{max} = 6000 mm (note minimum length, p. 2-24)	M12 / D9.8 / D17 / DB17
Customized profile finishing ($L_{max\ i}$ = 5400 mm)	DI / DIS / MT / MTS / MI / MIS / DG[1]

[1] DG_{max} = 45°; L_{min1} / L_{min2} = 439 / 578 mm

40x80x80L

A = 15,4 cm²
I_x = 96,6 cm⁴
I_y = 96,6 cm⁴
W_x = 24,2 cm³
W_y = 24,2 cm³
m = 4,2 kg/m

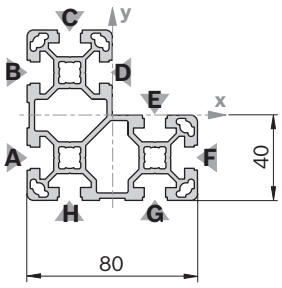

19213

40x80x80L		L (mm)	No.
1 pc		50 ... 6070	**3 842 993 193 / L**
8 pc		6070	**3 842 537 827**

Quick & Easy (p. 2-7, see fold-out section)

40x80x80L	3 842 993 730 / ...
Length L (mm)	50 ... 6070
Standard profile finishing L_{max} = 6000 mm (note minimum length, p. 2-24)	M12 / D9.8 / D17 / DB17
Customized profile finishing ($L_{max\ i}$ = 5400 mm)	DI / DIS / MT / MTS / MI / MIS / DG[1]

[1] DG_{max} = 45°; L_{min1} / L_{min2} = 439 / 578 mm

Cover cap	Color	ESD		No.
40x80x80 (1x)	Signal gray		20	**3 842 548 790**
40x80x80 (1x)	Black		20	**3 842 548 791**
Material:	PP			

40x120L

A = 15,5 cm²
I_x = 203,2 cm⁴
I_y = 27,8 cm⁴
W_x = 33,9 cm³
W_y = 13,9 cm³
m = 4,2 kg/m

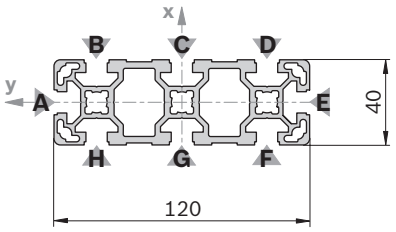



19214

40x120L			L (mm)	No.
	1 pc		50 ... 6070	**3 842 993 139 / L**
	1 pc	M12	60 ... 6000	**3 842 993 140 / L**
	1 pc	M12 M12	110 ... 6000	**3 842 993 141 / L**
	1 pc	D17 D17	80 ... 6000	**3 842 993 142 / L**
	1 pc	D17V D17V	90 ... 6000	**3 842 993 225 / L**
	8 pc		6070	**3 842 537 824**

Profile finishing: M12: in all core holes
D17: in slots B/H, C/G, D/F
D17V: in slots A/E

Cover cap	Color	ESD		No.
40x40 (1x)	Signal gray		100	**3 842 548 746**
40x80 (1x)	Signal gray		20	**3 842 548 748**
40x40 (1x)	Black		20	**3 842 548 747**
40x80 (1x)	Black		20	**3 842 548 749**
Material:	PP			

Notice:
For the 40x120L profile you require the following combination of cover caps: 1x 40x40 und 1x 40x80

Quick & Easy (p. 2-7, see fold-out section)

40x120L	3 842 993 716 / ...
Length L (mm)	50 ... 6070
Standard profile finishing L_{max} = 6000 mm (note minimum length, p. 2-24)	M12 / D9.8 (B,C,D,F, G,H)[1] / D17 (B,C,D,F, G,H)[1] / DB17 / F1 (A,E)[1]
Customized profile finishing ($L_{max\ i}$ = 5400 mm)	DI / DIS / MT / MTS / MI / MIS / DG[2]

[1] For the specified slots
[2] DG_{max} = 45°; L_{min1} / L_{min2} = 439 / 578 mm

40x160L

A = 20,5 cm²
I_x = 466,7 cm⁴
I_y = 37,2 cm⁴
W_x = 58,3 cm³
W_y = 18,6 cm³
m = 5,5 kg/m

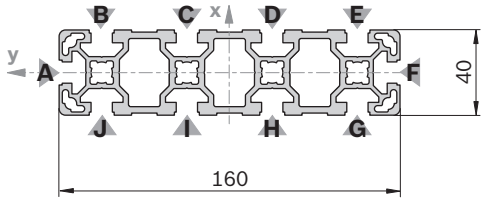



19215

40x160L			L (mm)	No.
	1 pc		50 ... 6070	**3 842 993 143 / L**
	1 pc	M12	60 ... 6000	**3 842 993 144 / L**
	1 pc	M12 M12	110 ... 6000	**3 842 993 145 / L**
	1 pc	D17 D17	80 ... 6000	**3 842 993 146 / L**
	6 pcs		6070	**3 842 529 345**

Profile finishing: M12: in all core holes
D17: in slots B/J, C/I, D/H, E/G

Cover cap	Color	ESD		No.
40x80 (2x)	Signal gray		20	**3 842 548 748**
40x80 (2x)	Black		20	**3 842 548 749**
Material:	PP			

Quick & Easy (p. 2-7, see fold-out section)

40x160L	3 842 993 717 / ...
Length L (mm)	80 ... 6070
Standard profile finishing L_{max} = 6000 mm (note minimum length, p. 2-24)	M12 / D9.8 (B,C,D,E,G,H, I,J)[1] / D17 (B,C,D,E,G,H, I,J)[1] / DB17 / F1 (A,F)[1]
Customized profile finishing ($L_{max\ i}$ = 5400 mm)	DI / DIS / MT / MTS / MI / MIS / DG[2]

[1] For the specified slots
[2] DG_{max} = 45°; L_{min1} / L_{min2} = 439 / 578 mm

80x80L

A = 18,2 cm²
I_x = 132,1 cm⁴
I_y = 132,1 cm⁴
W_x = 33,0 cm³
W_y = 33,0 cm³
m = 4,9 kg/m

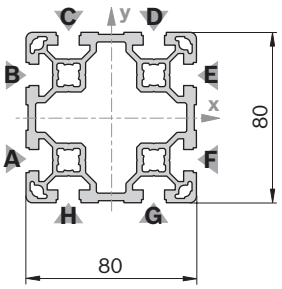

19216

80x80L			L (mm)	No.
	1 pc		50 ... 6070	**3 842 993 133 / L**
	1 pc	M12	60 ... 6000	**3 842 993 134 / L**
	1 pc	M12 M12	110 ... 6000	**3 842 993 147 / L**
	1 pc	M12 D17	90 ... 6000	**3 842 993 148 / L**
	1 pc	D17	60 ... 6000	**3 842 993 149 / L**
	1 pc	D17 D17	80 ... 6000	**3 842 993 150 / L**
	1 pc	D17 D17V	80 ... 6000	**3 842 993 151 / L**
	6 pcs		6070	**3 842 529 347**

Profile finishing: M12: in all core holes
D17: in slots A/F, B/E
D17V: in slots C/H, D/G

Cover cap	Color	ESD		No.
80x80 (1x)	Signal gray		20	**3 842 548 750**
80x80 (1x)	Black		20	**3 842 548 751**
Material:	PP			

Quick & Easy (p. 2-7, see fold-out section)

80x80L	3 842 993 674 / ...
Length L (mm)	50 ... 6070
Standard profile finishing L_{max} = 6000 mm (note minimum length, p. 2-24)	M12 / D9.8 / D17 / DB17 / F1
Customized profile finishing ($L_{max\ i}$ = 5400 mm)	DI / DIS / MT / MTS / MI / MIS / DG[1]

[1] DG_{max} = 45°; L_{min1} / L_{min2} = 439 / 578 mm

80x80L 4N

A = 19,1 cm²
I_x = 142,5 cm⁴
I_y = 142,5 cm⁴
W_x = 35,6 cm³
W_y = 35,6 cm³
m = 5,2 kg/m

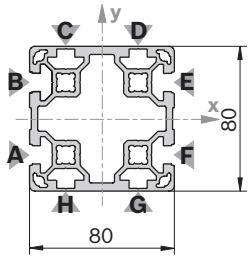

36363

80x80L 4N		L (mm)	No.
	6 pcs	6070	**3 842 555 651**

Quick & Easy (p. 2-7, see fold-out section)

80x80L 4N	3 842 993 769 / ...
Length L (mm)	50 ... 6070
Standard profile finishing L_{max} = 6000 mm (note minimum length, p. 2-24)	M12 / D9.8 / D17 / DB17 F1 (A, B, E, F)[1]
Customized profile finishing ($L_{max\ i}$ = 5400 mm)	DI / DIS / MT / MTS / MI / MIS / DG[2]

[1] For the specified slots
[2] DG_{max} = 45°; L_{min1} / L_{min2} = 439 / 578 mm

Cover cap	Color	ESD		No.
80x80 (1x)	Signal gray		20	**3 842 548 750**
80x80 (1x)	Black		20	**3 842 548 751**
Material:	PP			

80x80L 4NVS

A = 19,3 cm²
I_x = 142,5 cm⁴
I_y = 142,5 cm⁴
W_x = 35,6 cm³
W_y = 35,6 cm³
m = 5,2 kg/m

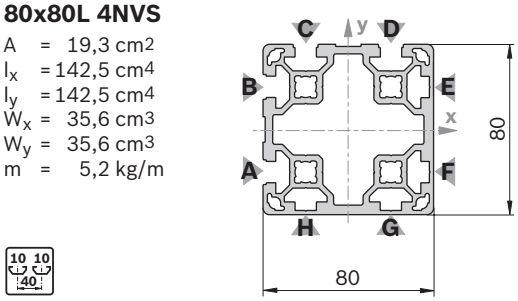

19416

Cover cap: see 80x80

80x80L 4NVS		L (mm)	No.
1 pc		50 ... 6070	**3 842 993 658 / L**
6 pcs		6070	**3 842 538 334**

Quick & Easy (p. 2-7, see fold-out section)

80x80L 4NVS	3 842 993 758 / ...
Length L (mm)	50 ... 6070
Standard profile finishing L_{max} = 6000 mm (note minimum length, p. 2-24)	M12 / D9.8 / D17 / DB17
Customized profile finishing ($L_{max\ i}$ = 5400 mm)	DI / DIS / MT / MTS / MI / MIS / DG[1]

[1] DG_{max} = 45°; L_{min1} / L_{min2} = 439 / 578 mm

80x80L 6N

A = 18,8 cm²
I_x = 134,1 cm⁴
I_y = 140,9 cm⁴
W_x = 33,5 cm³
W_y = 36,2 cm³
m = 5,1 kg/m

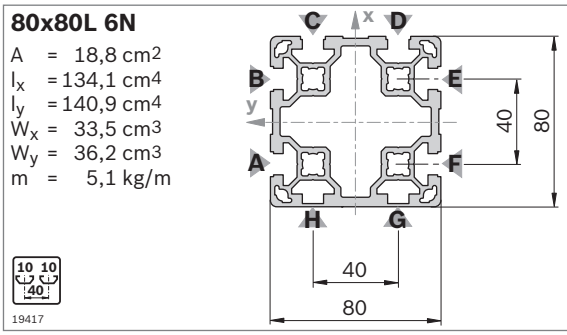

19417

Cover cap: see 80x80

80x80L 6N		L (mm)	No.
1 pc		50 ... 6070	**3 842 993 423 / L**
6 pcs		6070	**3 842 536 481**

Quick & Easy (p. 2-7, see fold-out section)

80x80L 6N	3 842 993 675 / ...
Length L (mm)	50 ... 6070
Standard profile finishing L_{max} = 6000 mm (note minimum length, p. 2-24)	M12 / D9.8 / D17 / DB17 / F1 (A,C,F)[1]
Customized profile finishing ($L_{max\ i}$ = 5400 mm)	DI / DIS / MT / MTS / MI / MIS / DG[2]

[1] For the specified slots
[2] DG_{max} = 45°; L_{min1} / L_{min2} = 439 / 578 mm

40x120x120L

A = 24,6 cm²
I_x = 318,0 cm⁴
I_y = 318,0 cm⁴
W_x = 42,2 cm³
W_y = 42,2 cm³
m = 6,7 kg/m

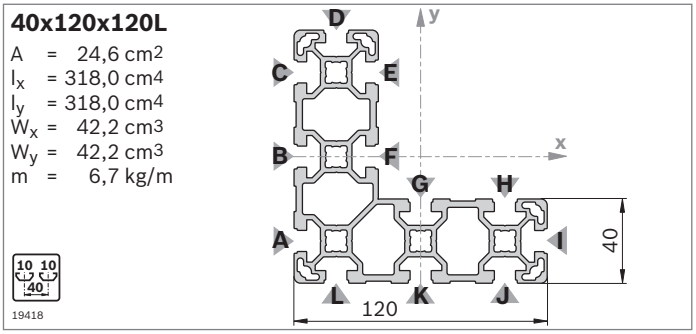

19418

40x120x120L		L (mm)	No.
1 pc		50 ... 6070	**3 842 993 653 / L**
4 pcs		6070	**3 842 538 287**

Quick & Easy (p. 2-7, see fold-out section)

40x120x120L	3 842 993 757 / ...
Length L (mm)	50 ... 6070
Standard profile finishing L_{max} = 6000 mm (note minimum length, p. 2-24)	M12 / D9.8 (B,C,J,K)[1] / D17 / DB17 (A,B,C,D,I, J,K,L)[1] / F1 (D,I)[1]
Customized profile finishing ($L_{max\ i}$ = 5400 mm)	DI / DIS / MT / MTS / MI / MIS / DG[2]

[1] For the specified slots
[2] DG_{max} = 45°; L_{min1} / L_{min2} = 420 / 540 mm

Cover cap	Color	ESD		No.
40x40 (5x)	Signal gray		100	**3 842 548 746**
40x80 (2x)	Signal gray		20	**3 842 548 748**
40x40 (1x)	Signal gray		100	**3 842 548 746**
40x40 (5x)	Black	⚠	20	**3 842 548 747**
40x80 (2x)	Black	⚠	20	**3 842 548 749**
40x40 (1x)	Black	⚠	20	**3 842 548 747**
Material:	PP			

Notice:
for the 40x120x120L profile you require the following combination of cover caps: 5x 40x40 or 2x 40x80 and 1x 40x40

80x120L

A = 25,6 cm²
I_x = 389,2 cm⁴
I_y = 192,8 cm⁴
W_x = 64,9 cm³
W_y = 48,2 cm³
m = 6,9 kg/m



19419

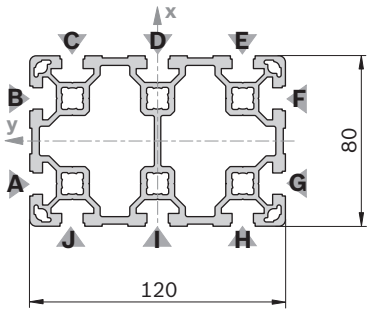

80x120L			L (mm)	No.
	1 pc		50 ... 6070	**3 842 993 201 / L**
	1 pc	M12	60 ... 6000	**3 842 993 202 / L**
	1 pc	M12 M12	110 ... 6000	**3 842 993 203 / L**
	1 pc	D17 D17	80 ... 6000	**3 842 993 204 / L**
	1 pc	D17V D17V	90 ... 6000	**3 842 993 229 / L**
	4 pcs		6070	**3 842 537 828**

Profile finishing: M12: in all core holes
D17: in slots C/J, D/I, E/H
D17V: in slots A/G, B/F

Cover cap	Color	ESD		No.
80x120 (1x)	Signal gray		20	**3 842 548 792**
80x120 (1x)	Black		20	**3 842 548 793**
Material:	PP			

Quick & Easy (p. 2-7, see fold-out section)

80x120L	3 842 993 672 / ...
Length L (mm)	50 ... 6070
Standard profile finishing L_{max} = 6000 mm (note minimum length, p. 2-24)	M12 / D9.8 (C,D,E,H,I, J)[1] / D17 (C,D,E,H,I,J)[1] / DB17 / F1 (A,F)[1]
Customized profile finishing ($L_{max\ i}$ = 5400 mm)	DI / DIS / MT / MTS / MI / MIS / DG[2]

[1] For the specified slots
[2] DG_{max} = 45°; L_{min1} / L_{min2} = 439 / 578 mm

80x160L

A = 32,9 cm²
I_x = 850,7 cm⁴
I_y = 253,4 cm⁴
W_x = 106,3 cm³
W_y = 63,4 cm³
m = 8,9 kg/m



19420

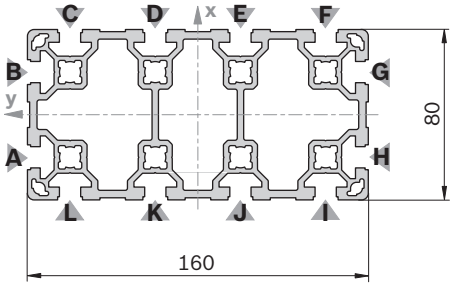

80x160L			L (mm)	No.
	1 pc		50 ... 6070	**3 842 993 127 / L**
	1 pc	M12	60 ... 6000	**3 842 993 128 / L**
	1 pc	M12 M12	110 ... 6000	**3 842 993 152 / L**
	1 pc	M12 D17	90 ... 6000	**3 842 993 153 / L**
	1 pc	D17	60 ... 6000	**3 842 993 154 / L**
	1 pc	D17 D17	80 ... 6000	**3 842 993 155 / L**
	1 pc	D17V D17V	90 ... 6000	**3 842 993 226 / L**
	3 pcs		6070	**3 842 529 349**

Profile finishing: M12: in all core holes
D17: in slots C/L, D/K, E/J, F/I
D17V: in slots A/H, B/G

Cover cap	Color	ESD		No.
80x80 (2x)	Signal gray		20	**3 842 548 750**
80x80 (2x)	Black		20	**3 842 548 751**
Material:	PP			

Quick & Easy (p. 2-7, see fold-out section)

80x160L	3 842 993 673 / ...
Length L (mm)	80 ... 6070
Standard profile finishing L_{max} = 6000 mm (note minimum length, p. 2-24)	M12 / D9.8 (C,D,E,F,I, J,K,L)[1] / D17 (C,D,E,F,I,J, K,L)[1] / DB17 / F1 (A,G)[1]
Customized profile finishing ($L_{max\ i}$ = 5400 mm)	DI / DIS / MT / MTS / MI / MIS / DG[2]

[1] For the specified slots
[2] DG_{max} = 45°; L_{min1} / L_{min2} = 460 / 620 mm

45x45L

A = 6,0 cm²
I_x = 11,7 cm⁴
I_y = 11,7 cm⁴
W_x = 5,2 cm³
W_y = 5,2 cm³
m = 1,6 kg/m

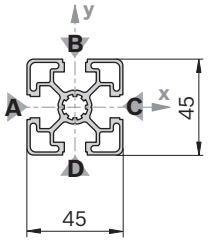

19421

45x45L			L (mm)	No.
	1 pc		50 ... 6070	**3 842 992 425 / L**
	1 pc	M12	60 ... 6000	**3 842 992 426 / L**
	1 pc	M12 M12	110 ... 6000	**3 842 992 427 / L**
	1 pc	M12 D17	90 ... 6000	**3 842 992 960 / L**
	1 pc	D9,8 D9,8	80 ... 6000	**3 842 992 967 / L**
	1 pc	D17	60 ... 6000	**3 842 992 953 / L**
	1 pc	D17 D17	80 ... 6000	**3 842 992 954 / L**
	1 pc	D17 D17V	80 ... 6000	**3 842 992 956 / L**
	20 pcs		6070	**3 842 553 611**

Cover cap	Color	ESD		No.
45x45 (1x)	Signal gray		100	**3 842 548 752**
45x45 (1x)	Black		20	**3 842 548 753**
Material:	PP			

Cover cap with hole	Color	ESD		No.
45x45 (1x)	Signal gray		20	**3 842 548 796**
45x45 (1x)	Black		20	**3 842 548 797**
Material:	PP			

Cover cap ZN	ESD	No.	FS
45x45-ZN		**3 842 518 205**	FS2
Material:	Cover cap: Diecast zinc Fastening material: Steel; galvanized		

Quick & Easy (p. 2-7, see fold-out section)

45x45L	3 842 993 737 / ...
Length L (mm)	50 ... 6070
Standard profile finishing L_{max} = 6000 mm (note minimum length, p. 2-24)	M12 / D9.8 / D17 / DB17 / F1 (A)[1]
Customized profile finishing ($L_{max\ i}$ = 5400 mm)	DI / DIS / MT / MTS / MI / MIS / DG[2]

[1] For the specified slots
[2] DG_{max} = 45°; L_{min1} / L_{min2} = 378 / 456 mm

FS2



DIN 7991
M6x16

45x45L 0N

A = 6,7 cm²
I_x = 13,5 cm⁴
I_y = 13,5 cm⁴
W_x = 6,0 cm³
W_y = 6,0 cm³
m = 1,8 kg/m

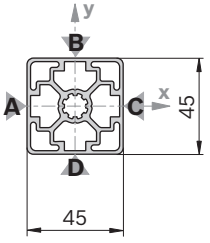

19422

45x45L 0N		L (mm)	No.
20 pcs		6070	**3 842 540 955**

Quick & Easy (p. 2-7, see fold-out section)

45x45L 0N	3 842 993 761 / ...
Length L (mm)	50 ... 6070
Standard profile finishing L_{max} = 6000 mm (note minimum length, p. 2-24)	M12 / D9.8 / D17 / DB17
Customized profile finishing ($L_{max\ i}$ = 5400 mm)	DI / DIS / MT / MTS / MI / MIS / DG[1]

[1] DG_{max} = 45°; L_{min1} / L_{min2} = 378 / 456 mm

Cover cap: see 45x45

45x45L 1N

A = 6,5 cm²
I_x = 12,6 cm⁴
I_y = 13,5 cm⁴
W_x = 5,5 cm³
W_y = 6,0 cm³
m = 1,8 kg/m

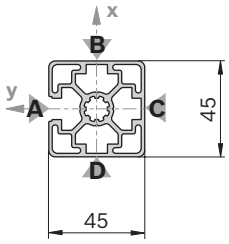

19423

Cover cap: see 45x45

45x45L 1N		L (mm)	No.
1 pc		50 ... 6070	**3 842 992 401 / L**
20 pcs		6070	**3 842 557 222**

Quick & Easy (p. 2-7, see fold-out section)

45x45L 1N	3 842 993 738 / ...
Length L (mm)	50 ... 6070
Standard profile finishing L_{max} = 6000 mm (note minimum length, p. 2-24)	M12 / D9.8 / D17 / DB17
Customized profile finishing ($L_{max\ i}$ = 5400 mm)	DI / DIS / MT / MTS / MI / MIS / DG[1)]

[1)] DG_{max} = 45°; L_{min1} / L_{min2} = 378 / 456 mm

45x45L 2N

A = 6,4 cm²
I_x = 11,6 cm⁴
I_y = 13,5 cm⁴
W_x = 5,2 cm³
W_y = 6,0 cm³
m = 1,7 kg/m

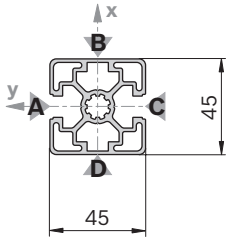

19424

Cover cap: see 45x45

45x45L 2N		L (mm)	No.
1 pc		50 ... 6070	**3 842 992 403 / L**
20 pcs		6070	**3 842 557 224**

Quick & Easy (p. 2-7, see fold-out section)

45x45L 2N	3 842 993 739 / ...
Length L (mm)	50 ... 6070
Standard profile finishing L_{max} = 6000 mm (note minimum length, p. 2-24)	M12 / D9.8 / D17 / DB17
Customized profile finishing ($L_{max\ i}$ = 5400 mm)	DI / DIS / MT / MTS / MI / MIS / DG[1)]

[1)] DG_{max} = 45°; L_{min1} / L_{min2} = 378 / 456 mm

45x45L 2NVS

A = 6,4 cm²
I_x = 12,6 cm⁴
I_y = 12,6 cm⁴
W_x = 5,6 cm³
W_y = 5,6 cm³
m = 1,7 kg/m

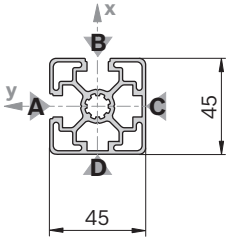

19425

Cover cap: see 45x45

45x45L 2NVS		L (mm)	No.
1 pc		50 ... 6070	**3 842 992 402 / L**
20 pcs		6070	**3 842 557 223**

Quick & Easy (p. 2-7, see fold-out section)

45x45L 2NVS	3 842 993 740 / ...
Length L (mm)	50 ... 6070
Standard profile finishing L_{max} = 6000 mm (note minimum length, p. 2-24)	M12 / D9.8 / D17 / DB17
Customized profile finishing ($L_{max\ i}$ = 5400 mm)	DI / DIS / MT / MTS / MI / MIS / DG[1)]

[1)] DG_{max} = 45°; L_{min1} / L_{min2} = 378 / 456 mm

45x45L 3N

A = 6,2 cm²
I_x = 12,6 cm⁴
I_y = 11,7 cm⁴
W_x = 5,4 cm³
W_y = 5,2 cm³
m = 1,7 kg/m

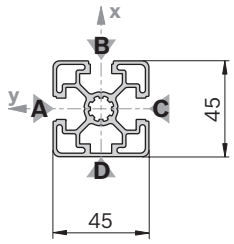

19426

Cover cap: see 45x45

45x45L 3N		L (mm)	No.
1 pc		50 ... 6070	**3 842 992 404 / L**
20 pcs		6070	**3 842 557 225**

Quick & Easy (p. 2-7, see fold-out section)

45x45L 3N	3 842 993 741 / ...
Length L (mm)	50 ... 6070
Standard profile finishing L_{max} = 6000 mm (note minimum length, p. 2-24)	M12 / D9.8 / D17 / DB17
Customized profile finishing ($L_{max\ i}$ = 5400 mm)	DI / DIS / MT / MTS / MI / MIS / DG[1)]

[1)] DG_{max} = 45°; L_{min1} / L_{min2} = 378 / 456 mm

45x30°

A = 6,9 cm²
I_x = 12,7 cm⁴
I_y = 15,2 cm⁴
W_x = 5,0 cm³
W_y = 5,3 cm³
m = 1,9 kg/m

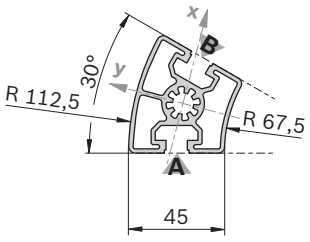

19427

45x30°		L (mm)	No.
1 pc		50 ... 6070	**3 842 993 013 / L**
20 pcs		6070	**3 842 557 954**

Quick & Easy (p. 2-7, see fold-out section)

45x30°	3 842 993 733 / ...
Length L (mm)	50 ... 6070
Standard profile finishing L_{max} = 6000 mm (note minimum length, p. 2-24)	M12
Customized profile finishing	–

Cover cap	Color	ESD		No.
45x30° (1x)	Signal gray		20	**3 842 551 020**
45x30° (1x)	Black	⚠	20	**3 842 551 021**
Material:	PP			

45x45°

A = 7,6 cm²
I_x = 13,4 cm⁴
I_y = 21,4 cm⁴
W_x = 5,2 cm³
W_y = 6,4 cm³
m = 2,0 kg/m

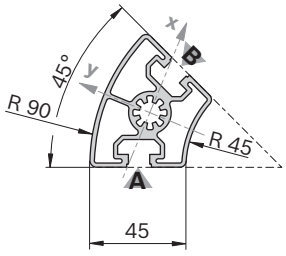

19428

45x45°		L (mm)	No.
1 pc		50 ... 6070	**3 842 993 014 / L**
20 pcs		6070	**3 842 557 955**

Quick & Easy (p. 2-7, see fold-out section)

45x45°	3 842 993 735 / ...
Length L (mm)	50 ... 6070
Standard profile finishing L_{max} = 6000 mm (note minimum length, p. 2-24)	M12
Customized profile finishing	–

Cover cap	Color	ESD		No.
45x45° (1x)	Signal gray		20	**3 842 551 022**
45x45° (1x)	Black	⚠	20	**3 842 551 023**
Material:	PP			

45x60°

A = 6,8 cm²
I_x = 11,4 cm⁴
I_y = 16,9 cm⁴
W_x = 4,4 cm³
W_y = 5,2 cm³
m = 1,8 kg/m

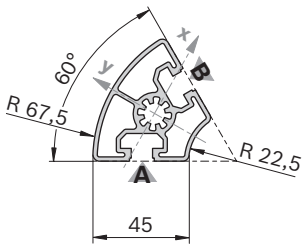

19429

45x60°		L (mm)	No.
1 pc		50 ... 6070	**3 842 993 015 / L**
20 pcs		6070	**3 842 557 956**

Quick & Easy (p. 2-7, see fold-out section)

45x60°	3 842 993 744 / ...
Length L (mm)	50 ... 6070
Standard profile finishing L_{max} = 6000 mm (note minimum length, p. 2-24)	M12
Customized profile finishing	–

Cover cap	Color	ESD		No.
45x60° (1x)	Signal gray		20	**3 842 551 024**
45x60° (1x)	Black	⚠	20	**3 842 551 025**
Material:	PP			

45x45L R

A = 4,9 cm²
I_x = 8,6 cm⁴
I_y = 8,6 cm⁴
W_x = 5,0 cm³
W_y = 5,0 cm³
m = 1,3 kg/m

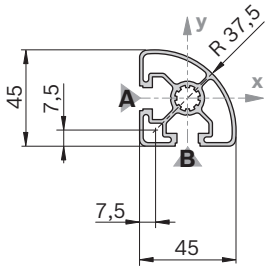

19430

45x45L R		L (mm)	No.
1 pc		50 ... 6070	**3 842 992 897 / L**
20 pcs		6070	**3 842 557 948**

Quick & Easy (p. 2-7, see fold-out section)

45x45L R	3 842 993 742 / ...
Length L (mm)	50 ... 6070
Standard profile finishing L_{max} = 6000 mm (note minimum length, p. 2-24)	M12 / DB17
Customized profile finishing	–

Cover cap	Color	ESD		No.
45x45 R (1x)	Signal gray		20	**3 842 548 800**
45x45 R (1x)	Black	⚠	20	**3 842 548 801**
Material:	PP			

45x45 HR

A = 6,6 cm²
I_x = 11,0 cm⁴
I_y = 10,7 cm⁴
W_x = 4,4 cm³
W_y = 4,8 cm³
m = 1,8 kg/m

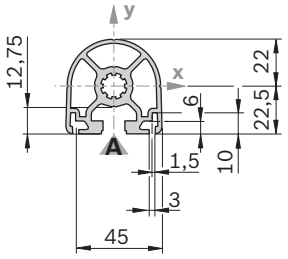

19431

45x45 HR		L (mm)	No.
1 pc		50 ... 6070	**3 842 992 945 / L**
1 pc	M12	60 ... 6000	**3 842 993 001 / L**
1 pc	M12 M12	110 ... 6000	**3 842 992 999 / L**
20 pcs		6070	**3 842 557 957**

Quick & Easy (p. 2-7, see fold-out section)

45x45 HR	3 842 993 736 / ...
Length L (mm)	50 ...6070
Standard profile finishing L_{max} = 6000 mm (note minimum length, p. 2-24)	M12 / DB17
Customized profile finishing ($L_{max\ i}$ = 5400 mm)	DI / DIS / MT / MTS / MI / MIS / DG[1)]

[1)] DG_{max} = 45°; L_{min1} / L_{min2} = 378 / 456 mm

Cover cap	Color	ESD		No.
45x45 HR (1x)	Signal gray		20	**3 842 548 798**
45x45 HR (1x)	Black	⚠	20	**3 842 548 799**
Material:	PP			

45x45

A = 7,5 cm²
I_x = 13,8 cm⁴
I_y = 13,8 cm⁴
W_x = 6,1 cm³
W_y = 6,1 cm³
m = 2,0 kg/m

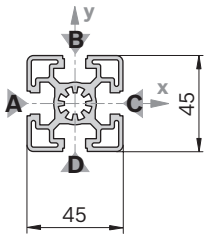

19432

Cover cap	Color	ESD		No.
45x45 (1x)	Signal gray		100	**3 842 548 752**
45x45 (1x)	Black	⚠	20	**3 842 548 753**
Material:	PP			

Cover cap with hole	Color	ESD		No.
45x45 (1x)	Signal gray		20	**3 842 548 796**
45x45 (1x)	Black	⚠	20	**3 842 548 797**
Material:	PP			

45x45		L (mm)	No.
1 pc		50 ... 6070	**3 842 990 520 / L**
1 pc	M12	60 ... 6000	**3 842 990 517 / L**
1 pc	M12 M12	110 ... 6000	**3 842 990 518 / L**
1 pc	M12 M16	180 ... 6000	**3 842 990 519 / L**
1 pc	M12 D17	90 ... 6000	**3 842 990 640 / L**
1 pc	M16	120 ... 6000	**3 842 990 521 / L**
1 pc	M16 D17	170 ... 6000	**3 842 990 642 / L**
1 pc	D9,8 D9,8	70 ... 6000	**3 842 992 969 / L**
1 pc	D17	60 ... 6000	**3 842 990 648 / L**
1 pc	D17 D17	80 ... 6000	**3 842 990 644 / L**
1 pc	D17 D17V	80 ... 6000	**3 842 990 646 / L**
20 pcs		6070	**3 842 553 614**

Quick & Easy (p. 2-7, see fold-out section)

45x45	3 842 993 734 / ...
Length L (mm)	50 ... 6070
Standard profile finishing L_{max} = 6000 mm (note minimum length, p. 2-24)	M12 / M16 / D9.8 / D17 / DB17
Customized profile finishing ($L_{max\ i}$ = 5400 mm)	DI / DIS / MT / MTS / MI / MIS / DG[1]

[1] DG_{max} = 45°; L_{min1} / L_{min2} = 378 / 456 mm

45x60

A = 11,0 cm²
I_x = 37,2 cm⁴
I_y = 22,7 cm⁴
W_x = 12,4 cm³
W_y = 10,1 cm³
m = 3,0 kg/m

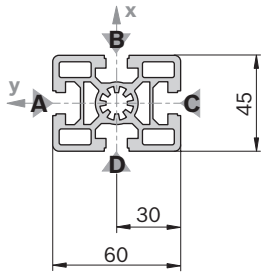

19433

Cover cap	Color	ESD		No.
45x60 (1x)	Signal gray		20	**3 842 548 754**
45x60 (1x)	Black	⚠	20	**3 842 548 755**
Material:	PP			

Cover cap with hole	Color	ESD		No.
45x60 (1x)	Signal gray		20	**3 842 548 802**
45x60 (1x)	Black	⚠	20	**3 842 548 803**
Material:	PP			

45x60		L (mm)	No.
1 pc		50 ... 6070	**3 842 990 570 / L**
1 pc	M12	60 ... 6000	**3 842 990 571 / L**
1 pc	M12 M12	110 ... 6000	**3 842 990 572 / L**
1 pc	M12 M16	180 ... 6000	**3 842 990 575 / L**
1 pc	M16	120 ... 6000	**3 842 990 573 / L**
1 pc	D9,8	50 ... 6000	**3 842 992 376 / L**
1 pc	D17	60 ... 6000	**3 842 990 688 / L**
1 pc	D17 D17	80 ... 6000	**3 842 990 672 / L**
1 pc	D17 D17V	80 ... 6000	**3 842 990 674 / L**
1 pc	D9,8V	50 ... 6000	**3 842 992 375 / L**
1 pc	D17V	60 ... 6000	**3 842 990 690 / L**
1 pc	D17V D17V	80 ... 6000	**3 842 990 670 / L**
1 pc	LF LF	80 ... 6000	**3 842 993 085 / L**
1 pc	F1 F1	80 ... 6000	**3 842 990 584 / L**
20 pcs		6070	**3 842 557 200**

Profile finishing
D9.8, D17: in slots B/D
D9.8V, D17V: in slots A/C
LF: in slots A/C
F1: in slot A

Quick & Easy (p. 2-7, see fold-out section)

45x60	3 842 993 743 / ...
Length L (mm)	50 ... 6070
Standard profile finishing L_{max} = 6000 mm (note minimum length, p. 2-24)	M12 / M16 / D9.8 / D17 / DB17 / F1 (A,C)[1]
Customized profile finishing ($L_{max\ i}$ = 5400 mm)	DI / DIS / MT / MTS / MI / MIS / DG[2]

[1] For the specified slots
[2] DG_{max} = 45°; L_{min1} / L_{min2} = 404 / 508 mm

45x90SL

A = 9,0 cm²
I_x = 73,4 cm⁴
I_y = 18,1 cm⁴
W_x = 16,3 cm³
W_y = 8,0 cm³
m = 2,4 kg/m

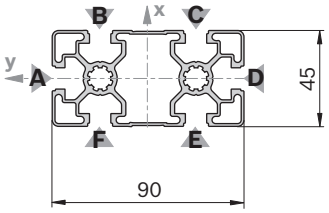

19434

Cover cap	Color	ESD		No.
45x90 (1x)	Signal gray		20	**3 842 548 756**
45x90 (1x)	Black	⚠	20	**3 842 548 757**
Material:	PP			

Cover cap with hole	Color	ESD		No.
45x90 (1x)	Signal gray		20	**3 842 548 804**
45x90 (1x)	Black	⚠	20	**3 842 548 805**
Material:	PP			

45x90SL		L (mm)	No.
1 pc		50 ... 6070	**3 842 993 450 / L**
12 pcs		6070	**3 842 537 102**

Quick & Easy (p. 2-7, see fold-out section)

45x90SL	3 842 993 759 / ...
Length L (mm)	50 ... 6070
Standard profile finishing L_{max} = 6000 mm (note minimum length, p. 2-24)	M12 / D9.8 / D17 / DB17
Customized profile finishing ($L_{max\ i}$ = 5400 mm)	DI / DIS / DG[1]

[1] DG_{max} = 45°; L_{min1} / L_{min2} = 456 / 612 mm

45x90L

A = 11,3 cm²
I_x = 82,0 cm⁴
I_y = 23,6 cm⁴
W_x = 18,2 cm³
W_y = 10,5 cm³
m = 3,0 kg/m

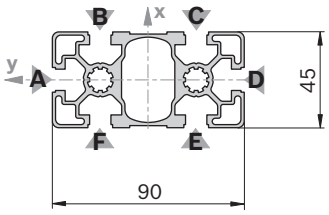

10 10 45

19435

45x90L		L (mm)	No.
1 pc		50 ... 6070	**3 842 992 432 / L**
1 pc	M12	60 ... 6000	**3 842 992 453 / L**
1 pc	M12 M12	110 ... 6000	**3 842 992 433 / L**
1 pc	D17 D17	80 ... 6000	**3 842 992 437 / L**
1 pc	D17 D17V	80 ... 6000	**3 842 992 436 / L**
1 pc	D17V	60 ... 6000	**3 842 992 452 / L**
1 pc	D17V D17V	80 ... 6000	**3 842 992 435 / L**
1 pc	LF LF	80 ... 6000	**3 842 993 084 / L**
12 pcs		6070	**3 842 553 612**

Profile finishing:
M12: in all core holes
D17: in slots B/F, C/E
D17V: in slots A/D
LF: in slots A/D

Cover cap	Color	ESD		No.
45x90 (1x)	Signal gray		20	**3 842 548 756**
45x90 (1x)	Black	⚠	20	**3 842 548 757**
Material:	PP			

Cover cap with hole	Color	ESD		No.
45x90 (1x)	Signal gray		20	**3 842 548 804**
45x90 (1x)	Black	⚠	20	**3 842 548 805**
Material:	PP			

Quick & Easy (p. 2-7, see fold-out section)

45x90L	3 842 993 662 / ...
Length L (mm)	50 ... 6070
Standard profile finishing L_{max} = 6000 mm (note minimum length, p. 2-24)	M12 / D9.8 / D17 / DB17 / F1 (A,D)[1]
Customized profile finishing ($L_{max\ i}$ = 5400 mm)	DI / DIS / MT / MTS / MI / MIS / DG[2]

[1] For the specified slots
[2] DG_{max} = 45°; L_{min1} / L_{min2} = 456 / 612 mm

45x90L 2N

A = 12,0 cm²
I_x = 26,9 cm⁴
I_y = 85,6 cm⁴
W_x = 6,0 cm³
W_y = 38,1 cm³
m = 3,2 kg/m

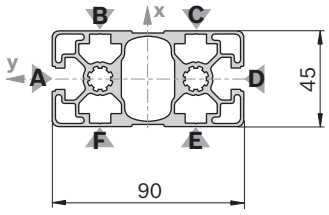

10 10 45

36364

Cover cap: see 45x90

45x90L 2N		L (mm)	No.
1 pc		50 ... 6070	**3 842 993 644 / L**
12 pcs		6070	**3 842 538 299**

Quick & Easy (p. 2-7, see fold-out section)

45x90L 2N	3 842 993 751 / ...
Length L (mm)	50 ... 6070
Standard profile finishing L_{max} = 6000 mm (note minimum length, p. 2-24)	M12 / D9.8 / D17 / DB17 / F1 (A,D)[1]
Customized profile finishing ($L_{max\ i}$ = 5400 mm)	DI / DIS / MT / MTS / MI / MIS / DG[2]

[1] For the specified slots
[2] DG_{max} = 45°; L_{min1} / L_{min2} = 456 / 612 mm

45x90L 2NVS

A = 12,0 cm²
I_x = 25,9 cm⁴
I_y = 90,6 cm⁴
W_x = 5,7 cm³
W_y = 40,3 cm³
m = 3,3 kg/m

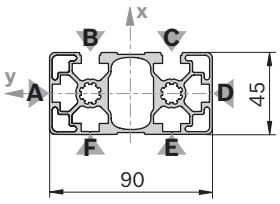



33096

Cover cap: see 45x90

45x90L 2NVS		L (mm)	No.
12 pcs		6070	**3 842 555 652**

Quick & Easy (p. 2-7, see fold-out section)

45x90L 2NVS	3 842 993 770 / ...
Length L (mm)	50 ... 6070
Standard profile finishing L_{max} = 6000 mm (note minimum length, p. 2-24)	M12 / D9.8 / D17 / DB17
Customized profile finishing ($L_{max\ i}$ = 5400 mm)	DI / DIS / MT / MTS / MI / MIS / DG[1)]

[1)] DG_{max} = 45°; L_{min1} / L_{min2} = 456/ 612 mm

45x90L 3NVS

A = 11,8 cm²
I_x = 87,2 cm⁴
I_y = 25,2 cm⁴
W_x = 38,8 cm³
W_y = 5,6 cm³
m = 3,2 kg/m

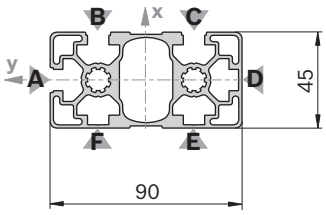



19437

Cover cap: see 45x90

45x90L 3NVS		L (mm)	No.
1 pc		50 ... 6070	**3 842 993 635 / L**
12 pcs		6070	**3 842 538 298**

Quick & Easy (p. 2-7, see fold-out section)

45x90L 3NVS	3 842 993 752 / ...
Length L (mm)	50 ... 6070
Standard profile finishing L_{max} = 6000 mm (note minimum length, p. 2-24)	M12 / D9.8 / D17 / DB17
Customized profile finishing ($L_{max\ i}$ = 5400 mm)	DI / DIS / MT / MTS / MI / MIS / DG[1)]

[1)] DG_{max} = 45°; L_{min1} / L_{min2} = 456 / 612 mm

45x90

A = 15,4 cm²
I_x = 124,6 cm⁴
I_y = 32,8 cm⁴
W_x = 27,7 cm³
W_y = 14,6 cm³
m = 4,2 kg/m

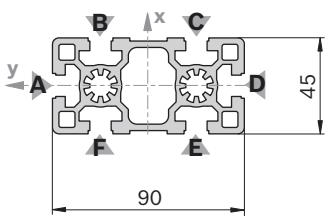

10 10 45

19438

Cover cap	Color	ESD		No.
45x90 (1x)	Signal gray		20	**3 842 548 756**
45x90 (1x)	Black	⚠	20	**3 842 548 757**
Material:	PP			

Cover cap with hole	Color	ESD		No.
45x90 (1x)	Signal gray		20	**3 842 548 804**
45x90 (1x)	Black	⚠	20	**3 842 548 805**
Material:	PP			

45x90		L (mm)	No.
1 pc		50 ... 6070	**3 842 990 300 / L**
1 pc	M12	60 ... 6000	**3 842 990 301 / L**
1 pc	M12 M12	110 ... 6000	**3 842 990 302 / L**
1 pc	M12 D17	90 ... 6000	**3 842 990 323 / L**
1 pc	M12 D17V	90 ... 6000	**3 842 990 305 / L**
1 pc	M16	120 ... 6000	**3 842 990 303 / L**
1 pc	M16 M16	240 ... 6000	**3 842 990 304 / L**
1 pc	M16 D17	170 ... 6000	**3 842 990 325 / L**
1 pc	M16 D17V	170 ... 6000	**3 842 990 307 / L**
1 pc	D17	60 ... 6000	**3 842 990 329 / L**
1 pc	D17 D17	80 ... 6000	**3 842 990 313 / L**
1 pc	D17 D17V	80 ... 6000	**3 842 990 311 / L**
1 pc	D17V	60 ... 6000	**3 842 990 331 / L**
1 pc	D17V D17V	80 ... 6000	**3 842 990 309 / L**
12 pcs		6070	**3 842 553 615**

Profile finishing: M12, M16: in all core holes
D17: in slots B/F, C/E
D17V: in slots A/D

Quick & Easy (p. 2-7, see fold-out section)

45x90	3 842 993 661 / ...
Length L (mm)	50 ... 6070
Standard profile finishing L_{max} = 6000 mm (note minimum length, p. 2-24)	M12 / M16 / D9.8 / D17 / DB17 / F1 (A,D)[1]
Customized profile finishing ($L_{max\ i}$ = 5400 mm)	DI / DIS / MT / MTS / MI / MIS / DG[2]

[1] For the specified slots
[2] DG_{max} = 45°; L_{min1} / L_{min2} = 456 / 612 mm

45x180

A = 25,5 cm²
I_x = 766,7 cm⁴
I_y = 57,3 cm⁴
W_x = 85,2 cm³
W_y = 25,5 cm³
m = 6,9 kg/m

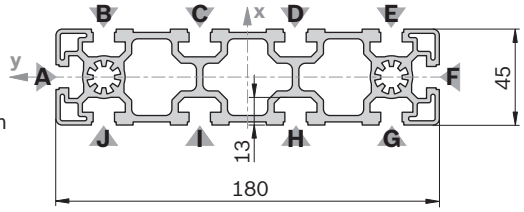

10 10 45

19439

Cover cap	Color	ESD		No.
45x180 (1x)	Signal gray		20	**3 842 548 794**
45x180 (1x)	Black	⚠	20	**3 842 548 795**
Material:	PP			

45x180		L (mm)	No.
1 pc		50 ... 6070	**3 842 990 335 / L**
1 pc	M12	60 ... 6000	**3 842 990 336 / L**
1 pc	M12 M12	110 ... 6000	**3 842 990 339 / L**
1 pc	D17 D17	80 ... 6000	**3 842 990 342 / L**
1 pc	D17V D17V	80 ... 6000	**3 842 990 344 / L**
6 pcs		6070	**3 842 553 616**

Profile finishing: M12: in all core holes
D17: in slots B/J, E/G
D17V: in slots A/F

Quick & Easy (p. 2-7, see fold-out section)

45x180	3 842 993 731 / ...
Length L (mm)	80 ... 6070
Standard profile finishing L_{max} = 6000 mm (note minimum length, p. 2-24)	M12 / M16 / D9.8 (B,C,D,E,G,H,I,J)[1] / D17 (B,C,D,E,G,H,I,J)[1] / DB17 / F1 (A,F)[1]
Customized profile finishing ($L_{max\ i}$ = 5400 mm)	DI / DIS / MT / MTS / MI / MIS / DG[2]

[1] For the specified slots
[2] DG_{max} = 30°; L_{min1} / L_{min2} = 404 / 508 mm

45x270

A = 61,9 cm²
I_x = 3962,0 cm⁴
I_y = 118,0 cm⁴
W_x = 300,2 cm³
W_y = 61,6 cm³
m = 16,7 kg/m

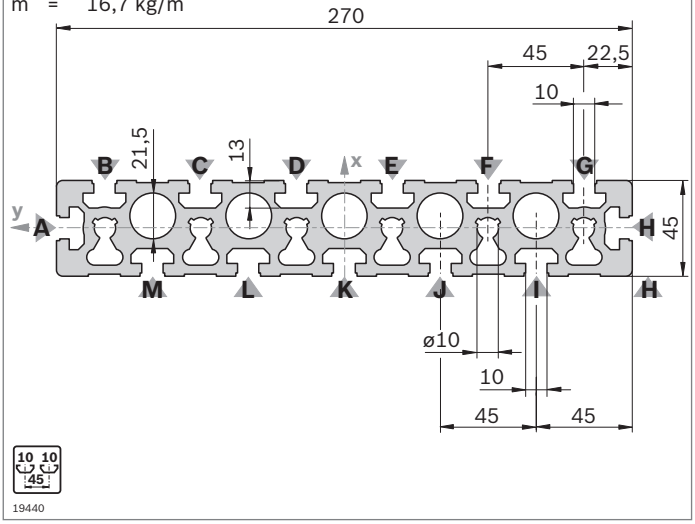

45x270		L (mm)	No.
1 pc		50 ... 6000	**3 842 992 927 / L**
1 pc	M12 M12	110 ... 6000	**3 842 992 928 / L**
2 pcs		6070	**3 842 557 949**

Profile finishing: M12: in core holes with C, F slots

Quick & Easy (p. 2-7, see fold-out section)

45x270	3 842 993 732 / ...
Length L (mm)	80 ... 6000
Standard profile finishing L_{max} = 6000 mm (note minimum length, p. 2-24)	M12 / D9.8 (B,C,D,E,F,G, I,J,K,L,M)[1] / D17 (B,C, D,E,F,G,I,J,K,L,M)[1] / DB17 / F1 (A,H)[1]
Customized profile finishing ($L_{max\ i}$ = 5400 mm)	DI / DIS / MT / MTS / MI / MIS

[1] For the specified slots

Cover cap	Color	ESD		No.
45x90 (3x)	Signal gray		20	**3 842 548 756**
45x90 (3x)	Black		20	**3 842 548 757**
Material:	PP			

45x90x90L

A = 21,2 cm²
I_x = 152,1 cm⁴
I_y = 152,1 cm⁴
W_x = 19,1 cm³
W_y = 19,1 cm³
m = 5,7 kg/m

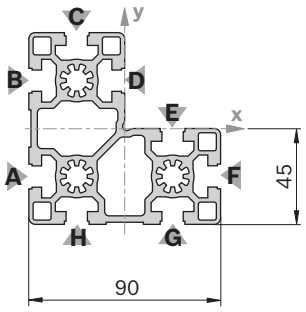

45x90x90L		L (mm)	No.
1 pc		50 ... 6070	**3 842 992 387 / L**
1 pc	M12	60 ... 6000	**3 842 992 388 / L**
8 pc		6070	**3 842 537 823**

Profile finishing: M12: in the central bore at the intersection of slots A and H

Quick & Easy (p. 2-7, see fold-out section)

45x90x90L	3 842 993 682 / ...
Length L (mm)	50 ... 6070
Standard profile finishing L_{max} = 6000 mm (note minimum length, p. 2-24)	M12 / D9.8 / D17 / DB17 (A,B,C,F,G,H)[1]
Customized profile finishing ($L_{max\ i}$ = 5400 mm)	DI / DIS / MT / MTS / MI / MIS / DG[2]

[1] For the specified slots
[2] DG_{max} = 45°; L_{min1} / L_{min2} = 456 / 612 mm

Cover cap	Color	ESD		No.
45x90x90 (1x)	Signal gray		20	**3 842 548 806**
45x90x90 (1x)	Black		20	**3 842 548 807**
Material:	PP			

Cover cap with hole[1]	Color	ESD		No.
45x90x90 (1x)	Signal gray		20	**3 842 548 806**
45x90x90 (1x)	Black		20	**3 842 548 807**
Material:	PP			

[1] The cover cap is also suitable for use with a hole, which can be broken out

45x90x90L 4N

A = 22,1 cm²
I_x = 160,8 cm⁴
I_y = 160,8 cm⁴
W_x = 30,6 cm³
W_y = 30,6 cm³
m = 6,0 kg/m

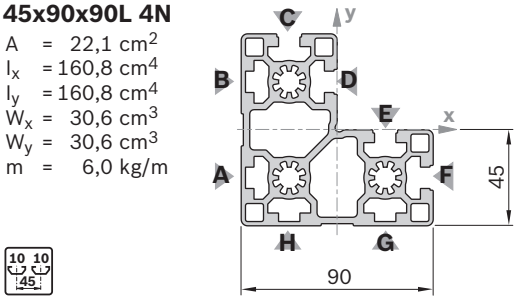

29432

Cover cap: see 45x90x90L

45x90x90L 4N		L (mm)	No.
8 pc		6070	**3 842 547 827**

Quick & Easy (p. 2-7, see fold-out section)

45x90x90L 4N	3 842 993 764
Length L (mm)	50 ... 6070
Standard profile finishing L_{max} = 6000 mm (note minimum length, p. 2-24)	M12 / D9.8 / D17 / DB17 (A,B,C,F,G,H)[1]
Customized profile finishing ($L_{max\ i}$ = 5400 mm)	DI / DIS / MT / MTS / MI / MIS / DG[2]

[1] For the specified slots
[2] DG_{max} = 45°; L_{min1} / L_{min2} = 456 / 612 mm

90x90SL

A = 14,1 cm2
I_x = 130,2 cm4
I_y = 130,2 cm4
W_x = 28,9 cm3
W_y = 28,9 cm3
m = 3,8 kg/m

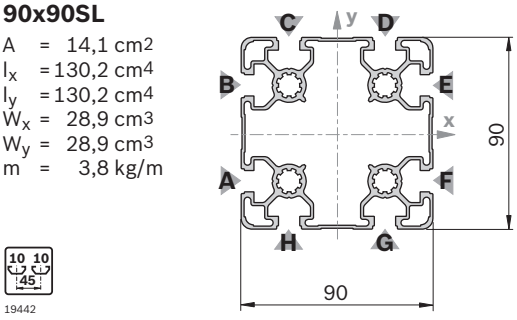

19442

Cover cap: see 90x90L

90x90SL		L (mm)	No.
1 pc		50 ... 6070	**3 842 993 449 / L**
6 pcs		6070	**3 842 537 100**

Quick & Easy (p. 2-7, see fold-out section)

90x90SL	3 842 993 681 / ...
Length L (mm)	50 ... 6070
Standard profile finishing L_{max} = 6000 mm (note minimum length, p. 2-24)	M12 / D9.8 / D17 / DB17
Customized profile finishing ($L_{max\ i}$ = 5400 mm)	DI / DIS / DG[1]

[1] DG_{max} = 45°; L_{min1} / L_{min2} = 456 / 612 mm

90x90L

A = 24,1 cm2
I_x = 211,1 cm4
I_y = 211,1 cm4
W_x = 46,9 cm3
W_y = 46,9 cm3
m = 6,5 kg/m

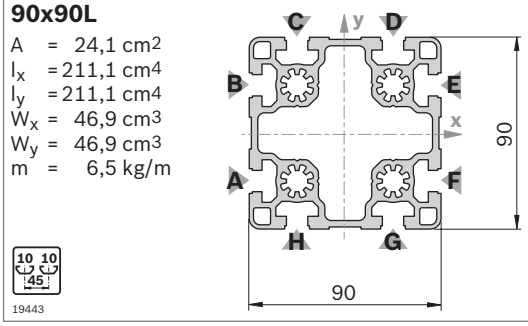

19443

90x90L			L (mm)	No.
1 pc			50 ... 6070	**3 842 992 415 / L**
1 pc	M12		60 ... 6000	**3 842 992 416 / L**
1 pc	M12	M12	110 ... 6000	**3 842 992 422 / L**
1 pc	M12	D17	90 ... 6000	**3 842 992 423 / L**
1 pc	D17		60 ... 6000	**3 842 992 417 / L**
1 pc	D17	D17	80 ... 6000	**3 842 992 420 / L**
1 pc	D17	D17V	80 ... 6000	**3 842 992 421 / L**
1 pc	LF	LF	80 ... 6000	**3 842 992 418 / L**
1 pc	LF	M12	90 ... 6000	**3 842 992 419 / L**
6 pcs			6070	**3 842 553 613**

Profile finishing:
M12: in all core holes
D17: in slots C/H, D/G
D17V: in slots A/F, B/E
LF: in slots C/H, D/G

Cover cap	Color	ESD		No.
90x90L (1x)	Signal gray		20	**3 842 548 758**
90x90L (1x)	Black		20	**3 842 548 759**
Material:	PP			

Quick & Easy (p. 2-7, see fold-out section)

90x90L	3 842 993 680 / ...
Length L (mm)	50 ... 6070
Standard profile finishing L_{max} = 6000 mm (note minimum length, p. 2-24)	M12 / D9.8 / D17 / DB17
Customized profile finishing ($L_{max\ i}$ = 5400 mm)	DI / DIS / MT / MTS / MI / MIS / DG[1]

[1] DG_{max} = 45°; L_{min1} / L_{min2} = 456 / 612 mm

90x90L 4N

A = 24,2 cm²
I_x = 227,4 cm⁴
I_y = 214,7 cm⁴
W_x = 50,5 cm³
W_y = 47,7 cm³
m = 6,5 kg/m



19444

90x90L 4N		L (mm)	No.
1 pc		50 ... 6070	**3 842 993 628 / L**
6 pcs		6070	**3 842 538 297**

Quick & Easy (p. 2-7, see fold-out section)

90x90L 4N	3 842 993 755 / ...
Length L (mm)	50 ... 6070
Standard profile finishing L_{max} = 6000 mm (note minimum length, p. 2-24)	M12 / D9.8 / D17 / DB17
Customized profile finishing ($L_{max\ i}$ = 5400 mm)	DI / DIS / MT / MTS / MI / MIS / DG[1]

[1] DG_{max} = 45°; L_{min1} / L_{min2} = 456 / 612 mm

Cover cap: see 90x90L

90x90L 4NVS

A = 24,2 cm²
I_x = 220,9 cm⁴
I_y = 220,9 cm⁴
W_x = 49,2 cm³
W_y = 49,2 cm³
m = 6,5 kg/m



19445

90x90L 4NVS		L (mm)	No.
1 pc		50 ... 6070	**3 842 993 621 / L**
6 pcs		6070	**3 842 538 296**

Quick & Easy (p. 2-7, see fold-out section)

90x90L 4NVS	3 842 993 756 / ...
Length L (mm)	50 ... 6070
Standard profile finishing L_{max} = 6000 mm (note minimum length, p. 2-24)	M12 / D9.8 / D17 / DB17
Customized profile finishing ($L_{max\ i}$ = 5400 mm)	DI / DIS / MT / MTS / MI / MIS / DG[1]

[1] DG_{max} = 45°; L_{min1} / L_{min2} = 456 / 612 mm

Cover cap: see 90x90L

90x90

A = 38,4 cm²
I_x = 299,8 cm⁴
I_y = 299,8 cm⁴
W_x = 66,7 cm³
W_y = 66,7 cm³
m = 10,4 kg/m



19446

90x90			L (mm)	No.
1 pc			50 ... 6070	**3 842 990 500 / L**
1 pc	M16		120 ... 6000	**3 842 990 501 / L**
1 pc	M16	M16	240 ... 6000	**3 842 990 502 / L**
1 pc	M16	D17	170 ... 6000	**3 842 992 961 / L**
1 pc	D17		60 ... 6000	**3 842 990 092 / L**
1 pc	D17	D17	80 ... 6000	**3 842 990 093 / L**
1 pc	D17	D17V	80 ... 6000	**3 842 990 094 / L**
1 pc	LF	LF	80 ... 6000	**3 842 993 082 / L**
1 pc	F2		60 ... 6000	**3 842 990 505 / L**
1 pc	F2	F2	110 ... 6000	**3 842 990 507 / L**
6 pcs			6070	**3 842 557 201**

Quick & Easy (p. 2-7, see fold-out section)

90x90	3 842 993 679 / ...
Length L (mm)	50 ... 6070
Standard profile finishing L_{max} = 6000 mm (note minimum length, p. 2-24)	M16 / D9.8 / D17 / DB17 / F1
Customized profile finishing ($L_{max\ i}$ = 5400 mm)	DI / DIS / MT / MTS / MI / MIS / DG[1]

[1] DG_{max} = 45°; L_{min1} / L_{min2} = 456 / 612 mm

Cover cap	Color	ESD		No.
90x90 (1x)	Signal gray		20	**3 842 548 760**
90x90 (1x)	Black		20	**3 842 548 761**
Material:	PP			

Cover cap with hole	Color	ESD		No.
90x90 (1x)	Signal gray		20	**3 842 548 814**
90x90 (1x)	Black		20	**3 842 548 815**
Material:	PP			

Notice: A quick connector cannot be used

90x180L

A = 42,8 cm²
I_x = 1380,0 cm⁴
I_y = 401,0 cm⁴
W_x = 153,3 cm³
W_y = 89,1 cm³
m = 11,6 kg/m

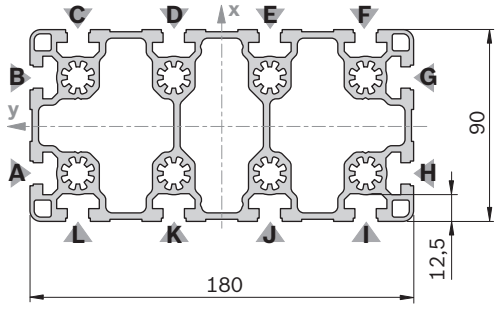

19447

90x180L		L (mm)	No.
1 pc		50 ... 6070	**3 842 992 857 / L**
1 pc	M12	60 ... 6000	**3 842 992 858 / L**
1 pc	M12 M12	110 ... 6000	**3 842 992 859 / L**
1 pc	M12 LF	90 ... 6000	**3 842 992 860 / L**
1 pc	D17V D17V	90 ... 6000	**3 842 992 864 / L**
1 pc	LF LF	80 ... 6000	**3 842 992 861 / L**
3 pcs		6070	**3 842 557 226**

Profile finishing: M12: in all core holes
D17V: in slots A/H, B/G
LF: in slots A/H, B/G

Cover cap	Color	ESD		No.
90x90L (2x)	Signal gray		20	**3 842 548 758**
90x90L (2x)	Black		20	**3 842 548 759**
Material:	PP			

Quick & Easy (p. 2-7, see fold-out section)

90x180L	3 842 993 677 / ...
Length L (mm)	80 ... 6070
Standard profile finishing L_{max} = 6000 mm (note minimum length, p. 2-24)	M12 / D9.8 (C,D,E,F,I,J,K,L)[1] / D17 (C,D,E,F,I,J,K,L)[1] / DB17 / F1 (A,G)[1]
Customized profile finishing ($L_{max\ i}$ = 5400 mm)	DI / DIS / MT / MTS / MI / MIS / DG[2]

[1] For the specified slots
[2] DG_{max} = 30°; L_{min1} / L_{min2} = 404 / 508 mm

90x180

A = 63,6 cm²
I_x = 2138,3 cm⁴
I_y = 544,3 cm⁴
W_x = 237,6 cm³
W_y = 121,0 cm³
m = 17,2 kg/m

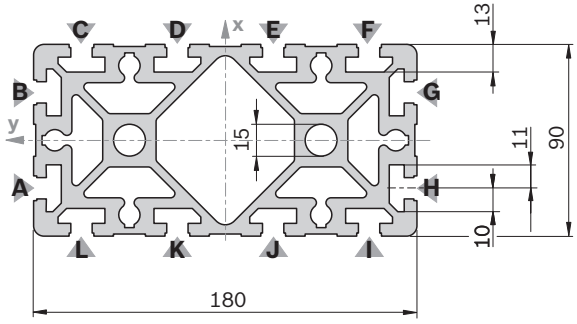

19448

90x180		L (mm)	No.
1 pc		50 ... 6070	**3 842 990 416 / L**
1 pc	M16	120 ... 6000	**3 842 990 417 / L**
1 pc	M16 M16	240 ... 6000	**3 842 990 418 / L**
1 pc	M16 F2	170 ... 6000	**3 842 990 419 / L**
1 pc	D17V D17V	80 ... 6000	**3 842 992 378 / L**
1 pc	LF LF	80 ... 6000	**3 842 992 898 / L**
1 pc	LF-S LF-S	80 ... 6000	**3 842 993 081 / L**
1 pc	F2 F2	110 ... 6000	**3 842 990 421 / L**
3 pcs		6070	**3 842 553 617**

Profile finishing: M16: in all core holes
D17V: in slots A/H, B/G
LF: in slots A/H, B/G
LF-S: in slots D/K, E/J

Cover cap	Color	ESD		No.
90x90 (2x)	Signal gray		20	**3 842 548 760**
90x90 (2x)	Black		20	**3 842 548 761**
Material:	PP			
Cover cap with hole	**Color**	**ESD**		**No.**
90x90 (2x)	Signal gray		20	**3 842 548 814**
90x90 (2x)	Black		20	**3 842 548 815**
Material:	PP			

Quick & Easy (p. 2-7, see fold-out section)

90x180	3 842 993 676 / ...
Length L (mm)	80 ... 6070
Standard profile finishing L_{max} = 6000 mm (note minimum length, p. 2-24)	M16 / D9.8 (C,D,E,F,I,J,K,L)[1] / D17 (C,D,E,F,I,J,K,L)[1] / DB17 / F1 (A,G)[1]
Customized profile finishing ($L_{max\ i}$ = 5400 mm)	DI / DIS / MT / MTS / MI / MIS / DG[2]

[1] For the specified slots
[2] DG_{max} = 30°; L_{min1} / L_{min2} = 404 / 508 mm

Notice: A quick connector cannot be used with profile 90x180

90x360

A = 90,2 cm²
I_x = 14065,0 cm⁴
I_y = 710,0 cm⁴
W_x = 781,4 cm³
W_y = 157,7 cm³
m = 24,4 kg/m

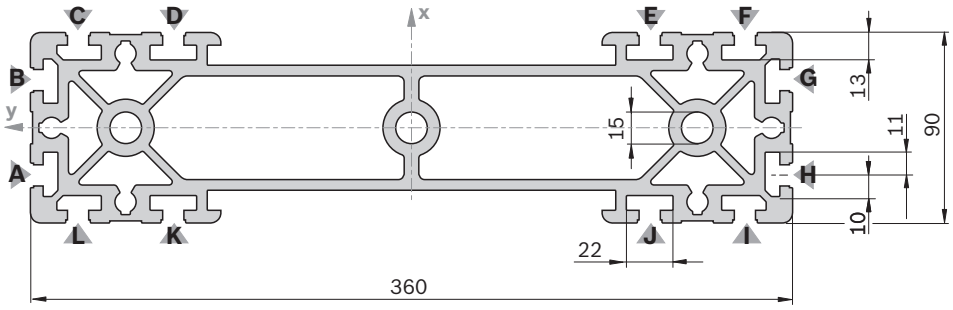

19449

Cover cap	Color	ESD		No.
90x90 (2x)	Signal gray		20	**3 842 548 760**
90x90 (2x)	Black	⚠	20	**3 842 548 761**
Material:	PP			

Cover cap with hole	Color	ESD		No.
90x90 (2x)	Signal gray		20	**3 842 548 814**
90x90 (2x)	Black	⚠	20	**3 842 548 815**
Material:	PP			

Notice: A quick connector cannot be used

90x360		L (mm)	No.
	▭	50 ... 6000	**3 842 993 434 / L**
	M16 ▭ M16	240 ... 6000	**3 842 993 435 / L**
	F2 ▭ F2	110 ... 6000	**3 842 993 436 / L**

Profile finishing: M16: in all core holes

Quick & Easy (p. 2-7, see fold-out section)

90x360	3 842 993 678 / ...
Length L (mm)	80 ... 6000
Standard profile finishing L_{max} = 6000 mm (note minimum length, p. 2-24)	M16 / D9.8 (C,D,E,F,I,J, K,L)[1] / D17 (C,D,E,F,I,J, K,L)[1] / DB17 / F1 (A,G)[1]
Customized profile finishing ($L_{max\ i}$ = 5400 mm)	DI / DIS / MT / MTS / MI / MIS

[1] For the specified slots

15x22,5

A = 1,3 cm²
I_x = 0,8 cm⁴
I_y = 0,3 cm⁴
W_x = 0,9 cm³
W_y = 0,6 cm³
m = 0,3 kg/m

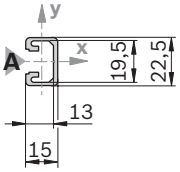

19450

Cover cap	Color	ESD		No.
15x22.5 (1x)	Signal gray		20	**3 842 548 816**
15x22.5 (1x)	Black	⚠	20	**3 842 548 817**
Material:	PP			

15x22.5		L (mm)	No.
1 pc	▭	50 ... 3000	**3 842 992 473 / L**
1 pc	D17 ▭	60 ... 3000	**3 842 992 474 / L**
1 pc	D17 ▭ D17	80 ... 3000	**3 842 992 475 / L**
10 pcs	▭	2000	**3 842 513 576**

Quick & Easy (p. 2-7, see fold-out section)

15x22.5	3 842 993 689 / ...
Length L (mm)	50 ... 2000
Standard profile finishing (note minimum length, p. 2-24)	D9.8 / D17
Customized profile finishing	–

15x180

A = 11,6 cm²
I_x = 321,7 cm⁴
I_y = 3,2 cm⁴
W_x = 35,7 cm³
W_y = 4,2 cm³
m = 3,1 kg/m

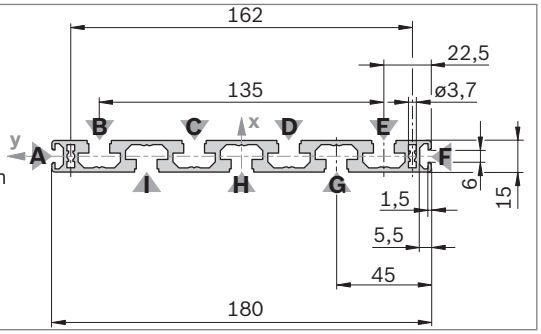

19451

Cover cap	Color	ESD		No.
15x180 (1x)	Signal gray		20	**3 842 548 772**
15x180 (1x)	Black	⚠	20	**3 842 548 773**
Material:	PP			

15x180		L (mm)	No.
1 pc		50 ... 6070	**3 842 993 079 / L**
6 pcs		6070	**3 842 557 242**

Quick & Easy (p. 2-7, see fold-out section)

15x180	3 842 993 686 / ...
Length L (mm)	80 ... 6070
Standard profile finishing L_{max} = 6000 mm (note minimum length, p. 2-24)	D9.8 (B,C,D,E,G,H,I)[1] / D17 (B,C,D,E,G,H,I)[1]
Customized profile finishing ($L_{max\ i}$ = 5400 mm)	DI / DIS / MT / MTS / MI / MIS

[1] For the specified slots

22,5x45

A = 4,7 cm²
I_x = 7,1 cm⁴
I_y = 2,9 cm⁴
W_x = 3,2 cm³
W_y = 2,6 cm³
m = 1,3 kg/m

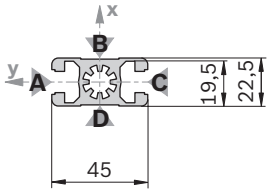

19452

Cover cap	Color	ESD		No.
22.5x45 (1x)	Signal gray		20	**3 842 548 830**
22.5x45 (1x)	Black	⚠	20	**3 842 548 831**
Material:	PP			

22.5x45		L (mm)	No.
1 pc		50 ... 6070	**3 842 990 292 / L**
1 pc	M12	60 ... 6000	**3 842 990 087 / L**
1 pc	M12 M12	110 ... 6000	**3 842 990 090 / L**
1 pc	D17V D17V	80 ... 6000	**3 842 990 091 / L**
24 pcs		6070	**3 842 537 812**

Quick & Easy (p. 2-7, see fold-out section)

22.5x45	3 842 993 700 / ...
Length L (mm)	50 ... 6070
Standard profile finishing L_{max} = 6000 mm (note minimum length, p. 2-24)	M12 / D9.8 (A,C)[1] / D17 / DB17 (A,C)[1]
Customized profile finishing ($L_{max\ i}$ = 5400 mm)	DI / DIS / MT / MTS / MI / MIS / DG[2]

[1] For the specified slots
[2] DG_{max} = 45°; L_{min1} / L_{min2} = 378 / 456 mm

22,5x180

A = 21,6 cm²
I_x = 581,0 cm⁴
I_y = 11,8 cm⁴
W_x = 66,8 cm³
W_y = 14,7 cm³
m = 5,8 kg/m

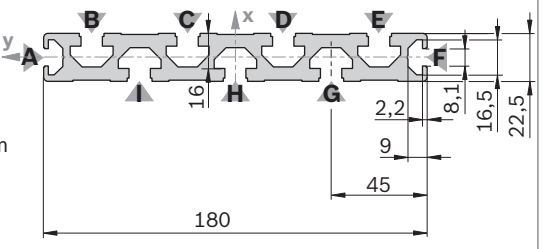

19453

Cover cap	Color	ESD		No.
22.5x180 (1x)	Signal gray		20	**3 842 548 770**
22.5x180 (1x)	Black	⚠	20	**3 842 548 771**
Material:	PP			

22.5x180		L (mm)	No.
1 pc		50 ... 6070	**3 842 990 345 / L**
6 pcs		6070	**3 842 557 944**
Profile finishing:		D28: in slots G, I	

Quick & Easy (p. 2-7, see fold-out section)

22.5x180	3 842 993 699 / ...
Length L (mm)	80 ... 6070
Standard profile finishing L_{max} = 6000 mm (note minimum length, p. 2-24)	D9.8 (B,C,D,E,G,H,I)[1] / D17 (B,C,D,E,G,H,I)[1]
Customized profile finishing ($L_{max\ i}$ = 5400 mm)	DI / DIS / MT / MTS / MI / MIS

[1] For the specified slots

50x50L

A = 9,3 cm²
I_x = 21,2 cm⁴
I_y = 21,2 cm⁴
W_x = 8,5 cm³
W_y = 8,5 cm³
m = 2,5 kg/m

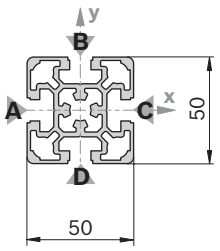

19454

Cover cap	Color	ESD		No.
50x50 (1x)	Signal gray		20	**3 842 548 820**
50x50 (1x)	Black	⚠	20	**3 842 548 821**
Material:	PP			

Cover cap with hole	Color	ESD		No.
50x50 (1x)	Signal gray		20	**3 842 548 822**
50x50 (1x)	Black	⚠	20	**3 842 548 823**
Material:	PP			

50x50L		L (mm)	No.
1 pc		50 ... 6070	**3 842 993 156 / L**
1 pc	M12	60 ... 6000	**3 842 993 157 / L**
1 pc	M12 M12	110 ... 6000	**3 842 993 158 / L**
1 pc	M12 D17	90 ... 6000	**3 842 993 159 / L**
1 pc	D9,8 D9,8	80 ... 6000	**3 842 993 164 / L**
1 pc	D17	60 ... 6000	**3 842 993 160 / L**
1 pc	D17 D17	80 ... 6000	**3 842 993 161 / L**
1 pc	D17 D17V	80 ... 6000	**3 842 993 162 / L**
20 pcs		6070	**3 842 529 351**

Quick & Easy (p. 2-7, see fold-out section)

50x50L	3 842 993 665 / ...
Length L (mm)	50 ... 6070
Standard profile finishing L_{max} = 6000 mm (note minimum length, p. 2-24)	M12 / M16 / D9.8 / D17 / DB17
Customized profile finishing ($L_{max\ i}$ = 5400 mm)	DI / DIS / MT / MTS / MI / MIS / DG[1]

[1] DG_{max} = 45°; L_{min1} / L_{min2} = 387 / 474 mm

50x100L

A = 17,2 cm²
I_x = 162,8 cm⁴
I_y = 42,6 cm⁴
W_x = 32,6 cm³
W_y = 17,0 cm³
m = 4,6 kg/m

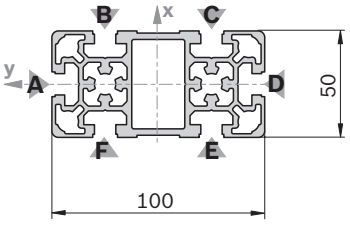

19455

Cover cap	Color	ESD		No.
50x50 (2x)	Signal gray		20	**3 842 548 820**
50x50 (2x)	Black	⚠	20	**3 842 548 821**
Material:	PP			

Cover cap with hole	Color	ESD		No.
50x50 (2x)	Signal gray		20	**3 842 548 822**
50x50 (2x)	Black	⚠	20	**3 842 548 823**
Material:	PP			

50x100L		L (mm)	No.
1 pc		50 ... 6070	**3 842 993 163 / L**
1 pc	M12	60 ... 6000	**3 842 993 165 / L**
1 pc	M12 M12	110 ... 6000	**3 842 993 166 / L**
1 pc	D17 D17	80 ... 6000	**3 842 993 167 / L**
1 pc	D17 D17V	80 ... 6000	**3 842 993 168 / L**
1 pc	D17V	60 ... 6000	**3 842 993 169 / L**
1 pc	D17V D17V	90 ... 6000	**3 842 993 170 / L**
10 pcs		6070	**3 842 537 825**

Profile finishing: M12: in all core holes
D17: in slots B/F, C/E
D17V: in slot A/D

Quick & Easy (p. 2-7, see fold-out section)

50x100L	3 842 993 663 / ...
Length L (mm)	50 ... 6070
Standard profile finishing L_{max} = 6000 mm (note minimum length, p. 2-24)	M12 / M16 / D9.8 / D17 / DB17 / F1 (A, D)[1]
Customized profile finishing ($L_{max\ i}$ = 5400 mm)	DI / DIS / MT / MTS / MI / MIS / DG[2]

[1] For the specified slots
[2] DG_{max} = 45°; L_{min1} / L_{min2} = 474 / 648 mm

50x150L

A = 25,8 cm²
I_x = 540,0 cm⁴
I_y = 64,2 cm⁴
W_x = 72,0 cm³
W_y = 25,7 cm³
m = 6,9 kg/m

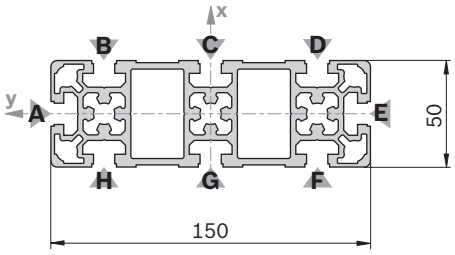



19456

50x150L			L (mm)	No.
	1 pc		50 ... 6070	**3 842 993 196 / L**
	1 pc	M12	60 ... 6000	**3 842 993 194 / L**
	1 pc	M12 M12	110 ... 6000	**3 842 993 199 / L**
	1 pc	D17 D17	80 ... 6000	**3 842 993 200 / L**
	4 pcs		6070	**3 842 537 826**

Profile finishing: M12: in all core holes
D17: in slots B/H, C/G, D/F
D17V: in slots A/E

Cover cap	Color	ESD		No.
50x150 (1x)	Signal gray		20	**3 842 548 818**
50x150 (1x)	Black	⚠	20	**3 842 548 819**
Material:	PP			

Quick & Easy (p. 2-7, see fold-out section)

50x150L	3 842 993 664 / ...
Length L (mm)	80 ... 6070
Standard profile finishing L_{max} = 6000 mm (note minimum length, p. 2-24)	M12 / M16 / D9.8 (B,C,D,F,G,H)[1] / D17 (B,C,D,F,G,H)[1] / DB17 / F1 (A,E)[1]
Customized profile finishing ($L_{max\ i}$ = 5400 mm)	DI / DIS / MT / MTS / MI / MIS / DG[2]

[1] For the specified slots
[2] DG_{max} = 45°; L_{min1} / L_{min2} = 450 / 600 mm

100x100L

A = 29,9 cm²
I_x = 318,3 cm⁴
I_y = 318,3 cm⁴
W_x = 63,7 cm³
W_y = 63,7 cm³
m = 8,1 kg/m

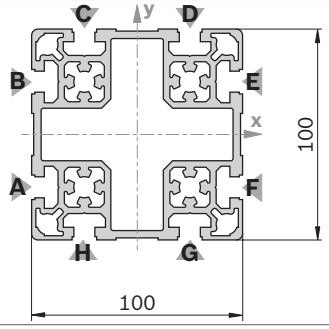



19457

100x100L			L (mm)	No.
	1 pc		50 ... 6070	**3 842 993 171 / L**
	1 pc	M12	60 ... 6000	**3 842 993 172 / L**
	1 pc	M12 M12	110 ... 6000	**3 842 993 173 / L**
	1 pc	M12 D17	90 ... 6000	**3 842 993 174 / L**
	1 pc	D17	60 ... 6000	**3 842 993 175 / L**
	1 pc	D17 D17	80 ... 6000	**3 842 993 176 / L**
	1 pc	D17 D17V	80 ... 6000	**3 842 993 177 / L**
	6 pcs		6070	**3 842 529 355**

Profile finishing: M12: in all core holes
D17: in slots C/H, D/G
D17V: in slots A/F, B/E

Cover cap	Color	ESD		No.
100x100 (1x)	Signal gray		20	**3 842 548 824**
100x100 (1x)	Black	⚠	20	**3 842 548 825**
Material:	PP			

Quick & Easy (p. 2-7, see fold-out section)

100x100L	3 842 993 685 / ...
Length L (mm)	50 ... 6070
Standard profile finishing L_{max} = 6000 mm (note minimum length, p. 2-24)	M12 / M16 / D9.8 / D17 / DB17 / F1
Customized profile finishing ($L_{max\ i}$ = 5400 mm)	DI / DIS / MT / MTS / MI / MIS / DG[1]

[1] DG_{max} = 45°; L_{min1} / L_{min2} = 474 / 648 mm

100x200L

A = 54,0 cm²
I_x = 2133,1 cm⁴
I_y = 602,1 cm⁴
W_x = 213,3 cm³
W_y = 120,4 cm³
m = 14,6 kg/m

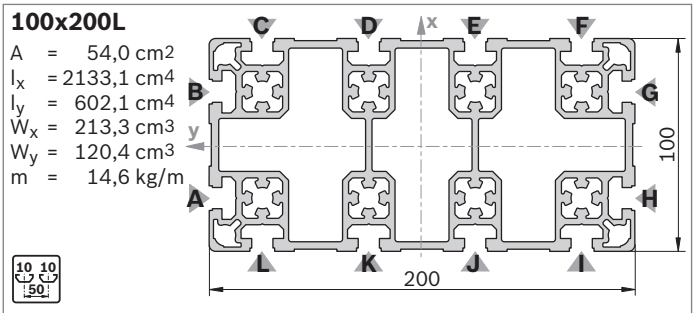

100x200L			L (mm)	No.
	1 pc		50 ... 6070	**3 842 993 178 / L**
	1 pc	M12	60 ... 6000	**3 842 993 179 / L**
	1 pc	M12 M12	110 ... 6000	**3 842 993 180 / L**
	1 pc	M12 D17	90 ... 6000	**3 842 993 181 / L**
	1 pc	D17	60 ... 6000	**3 842 993 182 / L**
	1 pc	D17 D17	80 ... 6000	**3 842 993 183 / L**
	3 pcs		6070	**3 842 529 357**

Profile finishing: M12: in all core holes
D17: in slots C/L, D/K, E/J, F/I
D17V: in slots A/H, B/G

Cover cap	Color	ESD		No.
100x100 (2x)	Signal gray		20	**3 842 548 824**
100x100 (2x)	Black		20	**3 842 548 825**
Material:	PP			

Quick & Easy (p. 2-7, see fold-out section)

100x200L	3 842 993 687 / ...
Length L (mm)	50 ... 6070
Standard profile finishing L_{max} = 6000 mm (note minimum length, p. 2-24)	M12 / M16 / D9.8 (C,D,E,F,I,J,K,L)[1] / D17 (C,D,E,F,I,J,K,L)[1] / DB17 / F1 (A,G)[1]
Customized profile finishing ($L_{max\,i}$ = 5400 mm)	DI / DIS / MT / MTS / MI / MIS / DG[2]

[1] For the specified slots
[2] DG_{max} = 30°; L_{min} = 416 / 532 mm

60x60L

A = 9,6 cm²
I_x = 32,4 cm⁴
I_y = 32,4 cm⁴
W_x = 10,8 cm³
W_y = 10,8 cm³
m = 2,6 kg/m

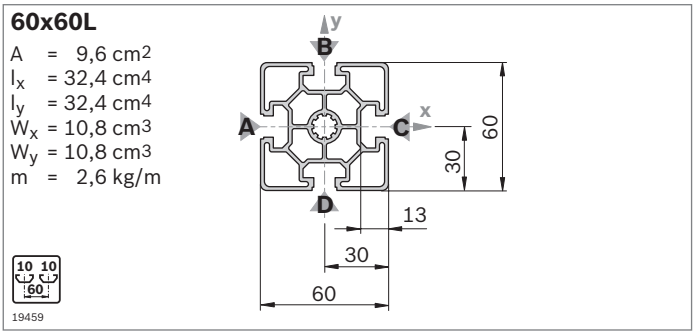

60x60L			L (mm)	No.
	1 pc		50 ... 6070	**3 842 992 443 / L**
	1 pc	M12	60 ... 6000	**3 842 992 444 / L**
	1 pc	M12 M12	110 ... 6000	**3 842 992 445 / L**
	1 pc	M12 D17	90 ... 6000	**3 842 992 446 / L**
	1 pc	D17	60 ... 6000	**3 842 992 449 / L**
	1 pc	D17 D17	80 ... 6000	**3 842 992 447 / L**
	1 pc	D17 D17V	80 ... 6000	**3 842 992 448 / L**
	20 pcs		6070	**3 842 557 204**

Cover cap	Color	ESD		No.
60x60 (1x)	Signal gray		100	**3 842 548 808**
60x60 (1x)	Black		20	**3 842 548 809**
Material:	PP			

Cover cap with hole	Color	ESD		No.
60x60 (1x)	Signal gray		20	**3 842 548 810**
60x60 (1x)	Black		20	**3 842 548 811**
Material:	PP			

Quick & Easy (p. 2-7, see fold-out section)

60x60L	3 842 993 670 / ...
Length L (mm)	50 ... 6070
Standard profile finishing L_{max} = 6000 mm (note minimum length, p. 2-24)	M12 / D9.8 / D17 / DB17
Customized profile finishing ($L_{max\,i}$ = 5400 mm)	DI / DIS / MT / MTS / MI / MIS / DG[1]

[1] DG_{max} = 45°; L_{min} = 404 / 508 mm

60x60

A = 14,4 cm²
I_x = 52,2 cm⁴
I_y = 52,2 cm⁴
W_x = 17,4 cm³
W_y = 17,4 cm³
m = 3,9 kg/m

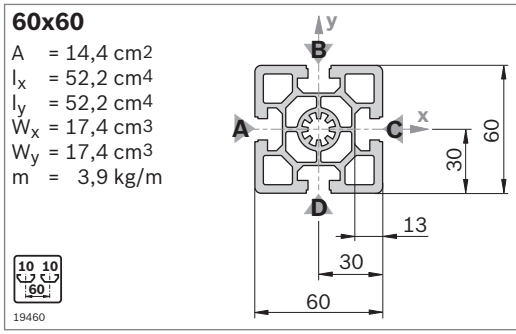

19460

Cover cap	Color	ESD		No.
60x60 (1x)	Signal gray		100	**3 842 548 808**
60x60 (1x)	Black	⚠	20	**3 842 548 809**
Material:	PP			

Cover cap with hole	Color	ESD		No.
60x60 (1x)	Signal gray		20	**3 842 548 810**
60x60 (1x)	Black	⚠	20	**3 842 548 811**
Material:	PP			

60x60		L (mm)	No.
1 pc		50 ... 6070	**3 842 990 350 / L**
1 pc	M12	60 ... 6000	**3 842 990 351 / L**
1 pc	M12 M12	110 ... 6000	**3 842 990 353 / L**
1 pc	M12 M16	180 ... 6000	**3 842 990 354 / L**
1 pc	M12 D17	90 ... 6000	**3 842 990 355 / L**
1 pc	M16	120 ... 6000	**3 842 990 352 / L**
1 pc	M16 D17	170 ... 6000	**3 842 990 373 / L**
1 pc	D17	50 ... 6000	**3 842 990 370 / L**
1 pc	D17 D17	80 ... 6000	**3 842 990 357 / L**
1 pc	D17 D17V	80 ... 6000	**3 842 990 359 / L**
20 pcs		6070	**3 842 557 202**

Quick & Easy (p. 2-7, see fold-out section)

60x60	3 842 993 668 / ...
Length L (mm)	50 ... 6070
Standard profile finishing L_{max} = 6000 mm (note minimum length, p. 2-24)	M12 / M16 / D9.8 / D17 / DB17
Customized profile finishing ($L_{max\,i}$ = 5400 mm)	DI / DIS / MT / MTS / MI / MIS / DG[1]

[1] DG_{max} = 45°; L_{min} = 404 / 508 mm

60x90

A = 25,8 cm²
I_x = 214,2 cm⁴
I_y = 90,5 cm⁴
W_x = 47,6 cm³
W_y = 30,2 cm³
m = 7,0 kg/m

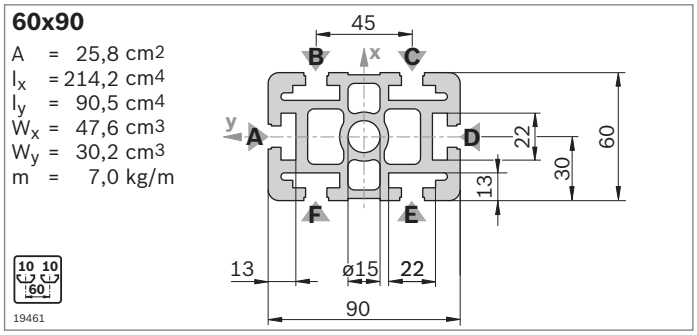

19461

Cover cap	Color	ESD		No.
60x90 (1x)	Signal gray		20	**3 842 548 812**
60x90 (1x)	Black	⚠	20	**3 842 548 813**
Material:	PP			

Cover cap with hole	Color	ESD		No.
60x90 (1x)	Signal gray		20	**3 842 551 050**
60x90 (1x)	Black	⚠	20	**3 842 551 051**
Material:	PP			

Notice: A quick connector cannot be used

60x90		L (mm)	No.
1 pc		50 ... 6070	**3 842 990 450 / ...**
1 pc	M16	120 ... 6000	**3 842 990 453 / ...**
1 pc	M16 M16	240 ... 6000	**3 842 990 454 / ...**
1 pc	M16 D17	170 ... 6000	**3 842 992 962 / ...**
1 pc	M16 D17V	170 ... 6000	**3 842 992 963 / ...**
1 pc	M16 F2	170 ... 6000	**3 842 990 472 / ...**
1 pc	D17 D17	80 ... 6000	**3 842 990 097 / ...**
1 pc	D17 D17V	80 ... 6000	**3 842 990 099 / ...**
1 pc	D17V D17V	90 ... 6000	**3 842 990 098 / ...**
1 pc	F1 F1	110 ... 6000	**3 842 990 464 / ...**
1 pc	F1 F1V	110 ... 6000	**3 842 990 481 / ...**
1 pc	F2 F2	110 ... 6000	**3 842 990 478 / ...**
10 pcs		6070	**3 842 557 207**

Profile finishing: D17: in slots B/F, C/E
D17V: in slots A/D

Quick & Easy (p. 2-7, see fold-out section)

60x90	3 842 993 671 / ...
Length L (mm)	50 ... 6070
Standard profile finishing L_{max} = 6000 mm (note minimum length, p. 2-24)	M16 / D9.8 / D17 / DB17 / F1 (A, D)[1]
Customized profile finishing ($L_{max\,i}$ = 5400 mm)	DI / DIS / MT / MTS / MI / MIS / DG[1]

[1] For the specified slots

[1] DG_{max} = 45°; L_{min} = 456 / 612 mm

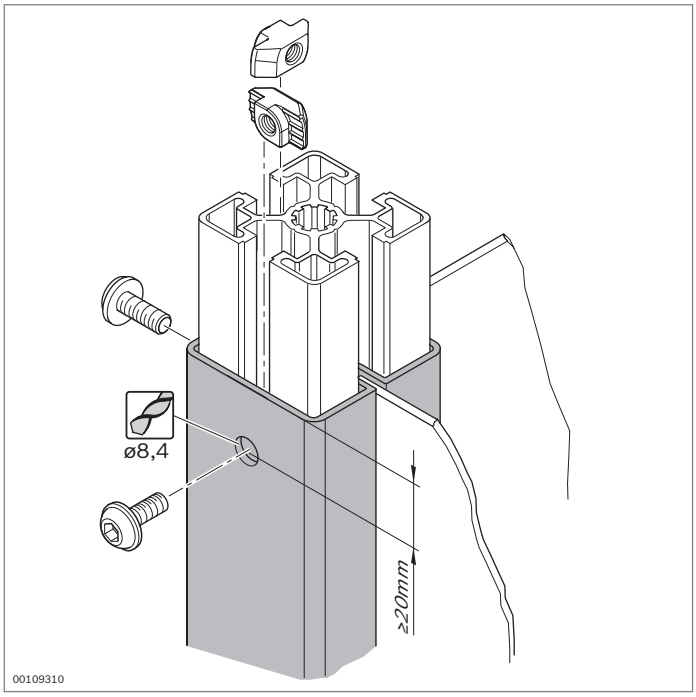

Rectangular tube

10

- For constructing manually height-adjustable frames
- Cut-outs for mounting of panel elements
- Profile finishing: Hole for screw

Required accessories:
Fastening material

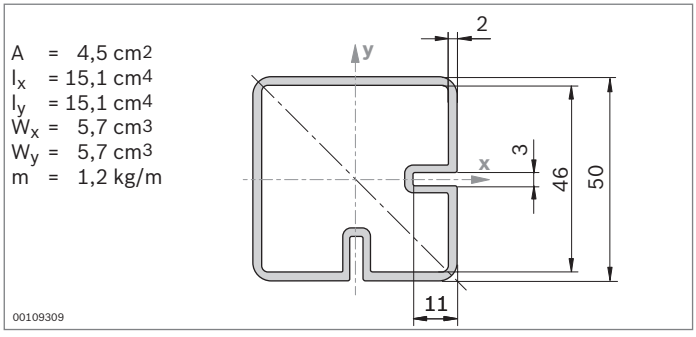

Rectangular tube		L (mm) No.
1 pc		50 ... 6070 **3 842 992 913 / L**
6 pcs		6070 **3 842 557 960**

Material: Aluminum; anodized

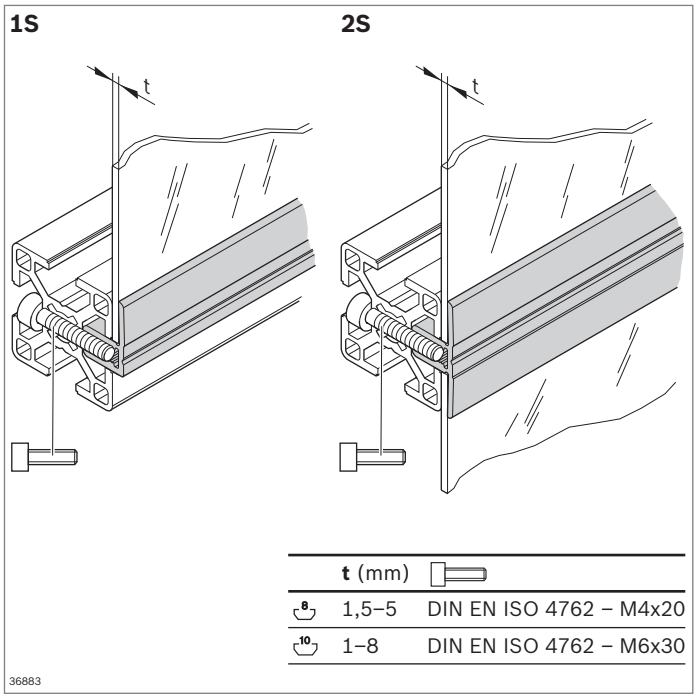

	t (mm)	
8	1,5–5	DIN EN ISO 4762 – M4x20
10	1–8	DIN EN ISO 4762 – M6x30

Clamping profile

- For simple fastening of panes, panel elements, or grilles on strut profiles
- For subsequent installation in closed frame constructions
- For panel elements with varying thicknesses
- Profile finishing: Through-hole for mounting screw

Required accessories:

- Cylinder head bolt DIN EN ISO 4762 – M4x20 (8 mm slot)
- Cylinder head bolt DIN EN ISO 4762 – M6x30 (10 mm slot)

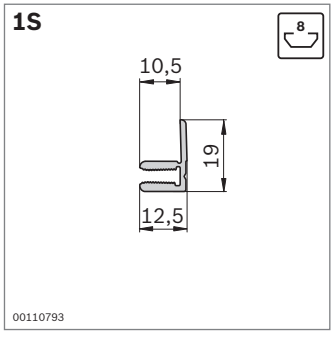

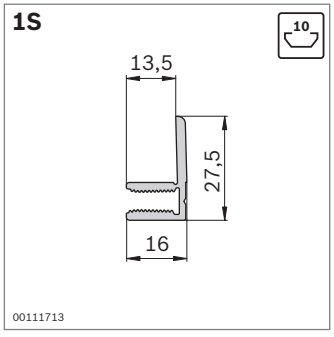

Clamping profile 1S		Slot	L (mm)	No.
1 pc		8	50 ... 3000	**3 842 993 017 / L**
10 pcs		8	3000	**3 842 524 058**
1 pc		10	50 ... 3000	**3 842 993 019 / L**
10 pcs		10	3000	**3 842 524 064**
Material:	Aluminum; anodized			

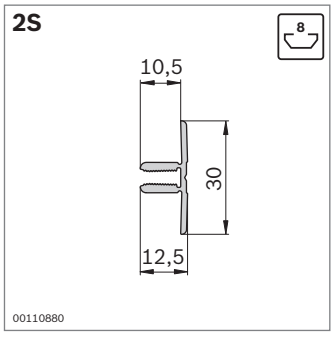

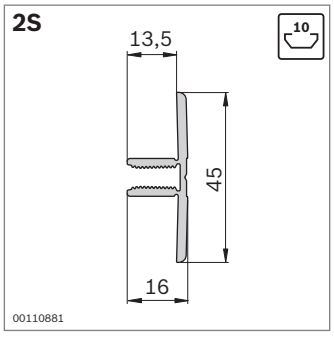

Clamping profile 2S		Slot	L (mm)	No.
1 pc		8	50 ... 3000	**3 842 993 018 / L**
10 pcs		8	3000	**3 842 524 061**
1 pc		10	50 ... 3000	**3 842 993 020 / L**
10 pcs		10	3000	**3 842 524 067**
Material:	Aluminum; anodized			

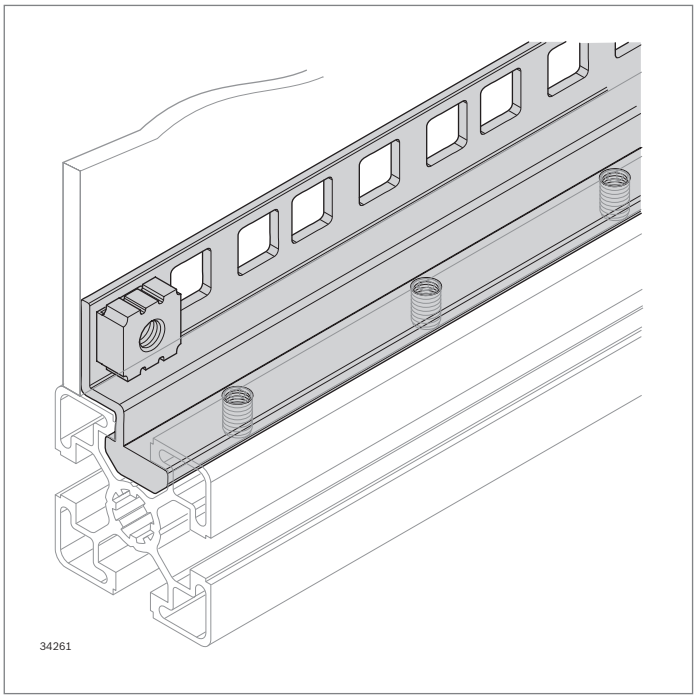

Al angle profile 19"

10

- Rail for mounting 19" devices in electronic and electrical production
- Suitable for fastening panel elements
- Fully finished angle profile
  - with square cutouts for fastening the 19" devices with a cage nut (hole according to DIN 60297-3-100)
  - with threads for fastening the Al angle profile with headless setscrews in the slot
- Angle profile, can be swiveled into slot

Required accessories: Headless setscrew M6x12

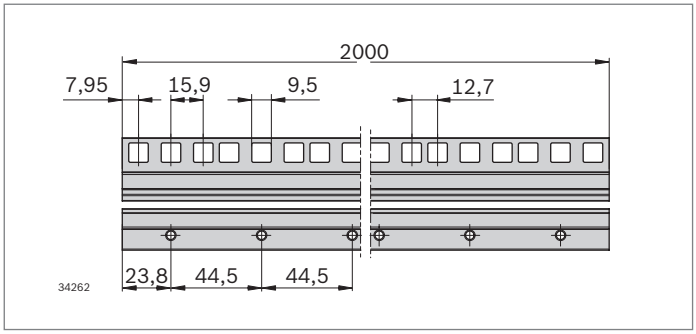

Al angle profile 19"		L (mm)	No.
	10 pcs	2000	**3 842 557 254**
Material:	Aluminum; anodized		

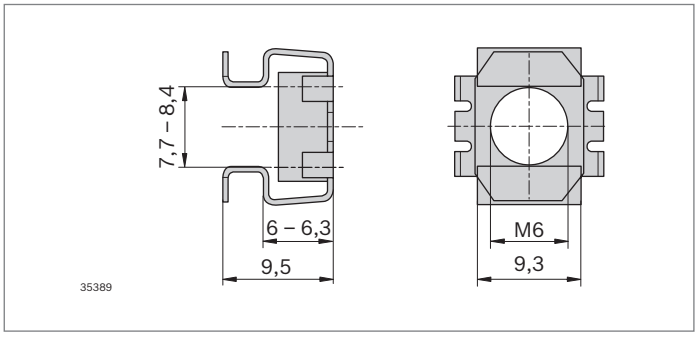

Cage nut

- For fastening panel elements or 19" devices on profile
- Easy assembly as tension springs snap into the recess

Cage nut M6		No.
	20	**3 842 557 255**
Material:	Steel; galvanized	

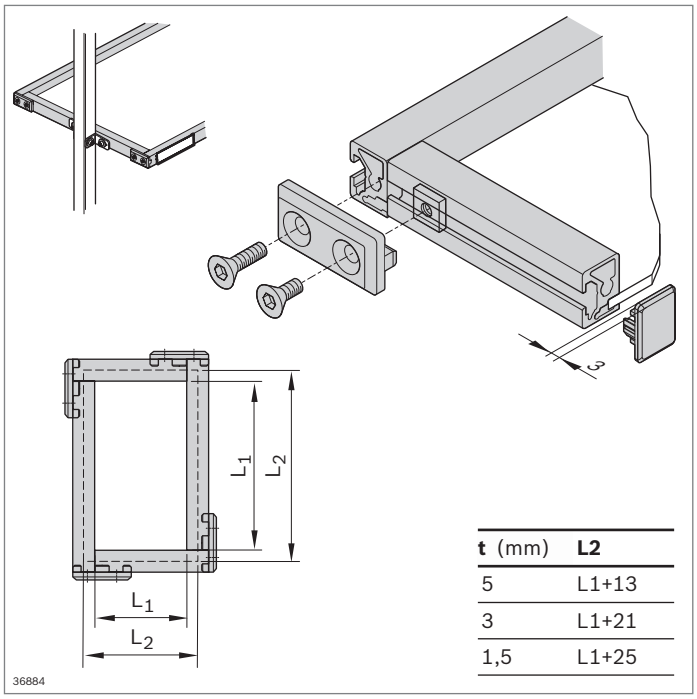

t (mm)	L2
5	L1+13
3	L1+21
1,5	L1+25

Frame profile 22.5x30

- For inexpensive construction of trays and material shelves
- Panel elements are mounted under tension so that they do not rattle

Optional accessories:
- Bracket set M6 (p. 3-30)
- Swivel mounting (p. 4-12)
- Labeling clip for 8 mm slot (p. 2-86)
- Plate (p. 2-62)

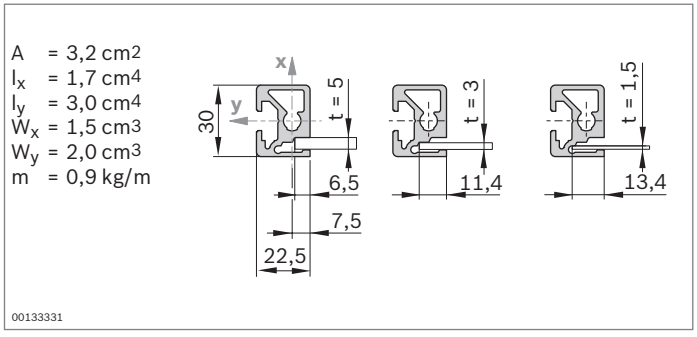

Frame profile 22.5x30		Slot	L (mm)	No.
1 pc		8	50 ... 6070	**3 842 992 493 / L**
20 pcs		8	6070	**3 842 557 946**

Material: Aluminum; anodized

Cover cap	Color	ESD		No.
22.5x30	Signal gray		20	**3 842 551 564**
22.5x30	Black		20	**3 842 551 565**

Material: PP

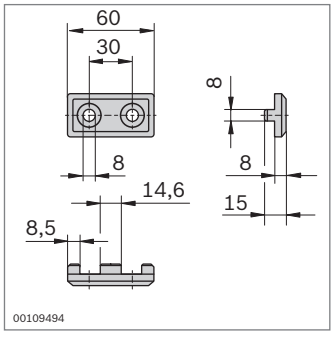

FS1

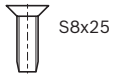

FS2

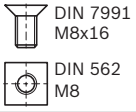

Corner piece for frame profile 22.5x30

- For the right-angled connection of two 22.5x30 frame profiles
- Profile finishing not required

Corner piece	Color	ESD		No.	FS
22.5x30	Signal gray		20	**3 842 554 708**	FS1, FS2
22.5x30	Black		20	**3 842 554 709**	FS1, FS2

Material: PA
Scope of delivery: Incl. fastening material (FS)

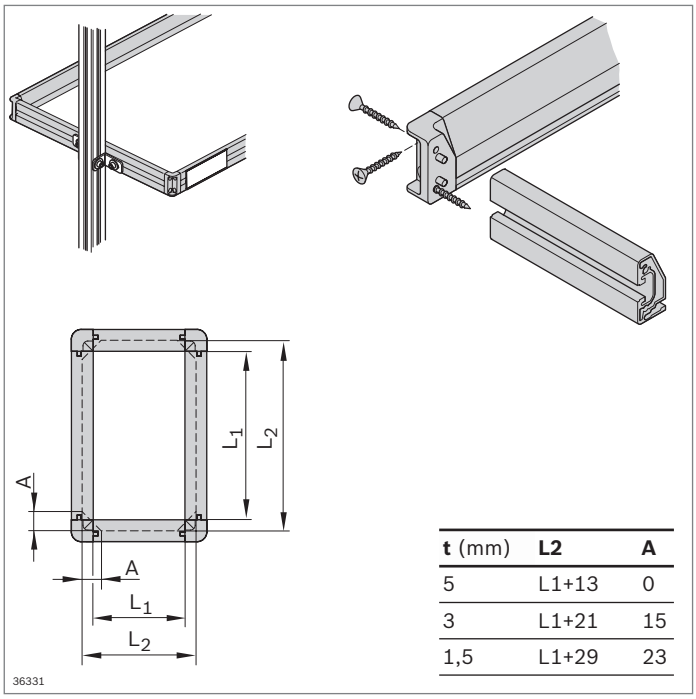

t (mm)	L2	A
5	L1+13	0
3	L1+21	15
1,5	L1+29	23

Frame profile 22.5x45

- For inexpensive construction of trays and material shelves
- Panel elements are mounted under tension so that they do not rattle

Optional accessories:
- Bracket set (p. 3-32)
- Swivel mounting (p. 4-12)
- Labeling clip for 10 mm slot (p. 2-86)
- Plate (p. 2-62)

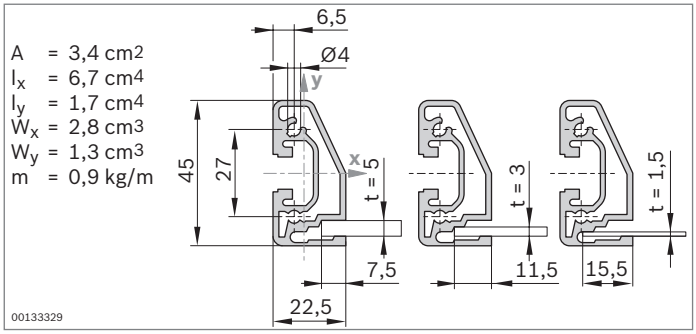

Frame profile 22.5x45	Slot	L (mm)	No.
1 pc	10	50 ... 6070	**3 842 992 411 / L**
20 pcs	10	6070	**3 842 557 941**

Material: Aluminum; anodized

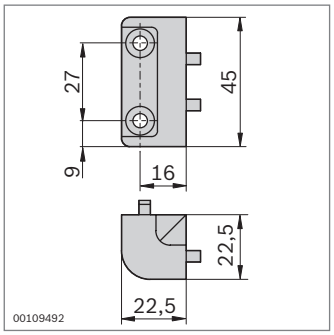

FS1



Corner bracket for frame profile 22.5x45

- For the right-angled connection of two 22.5x45 frame profiles
- Profile finishing not required

Corner bracket	ESD		No.	FS
22.5x45		20	**3 842 535 637**	4xFS1

Material: Diecast zinc
Scope of delivery: Incl. fastening material (FS)

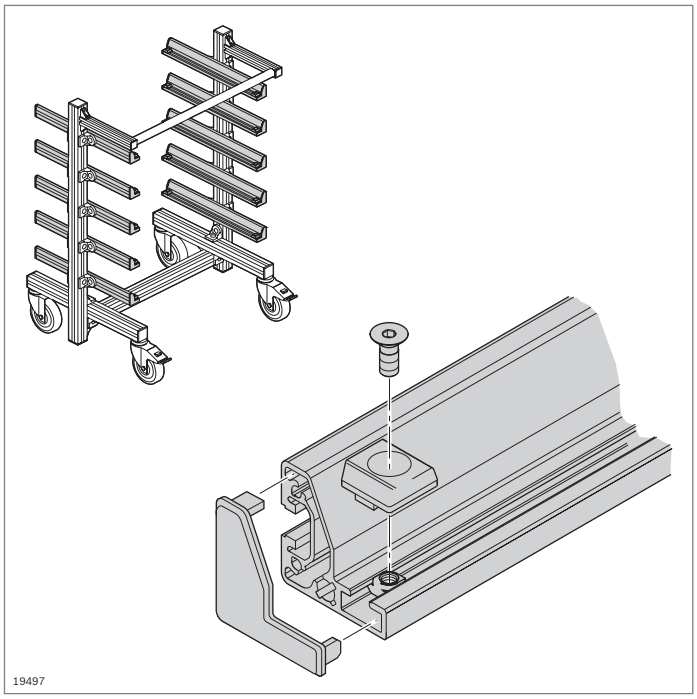

Angle profile

- For supporting containers, plates, or workpiece pallets in flow racks, material shuttles, or hopper stackers

Accessories:
Bracket R40x43 (p. 3-31)

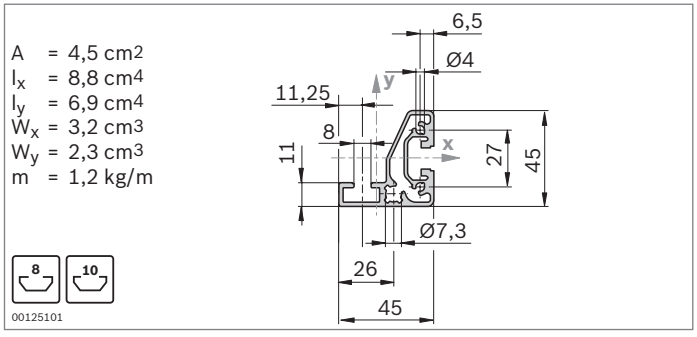

Angle profile		L (mm)	No.
1 pc		50 ... 6070	**3 842 992 412 / L**
20 pcs		6070	**3 842 557 942**

Material: Aluminum; anodized

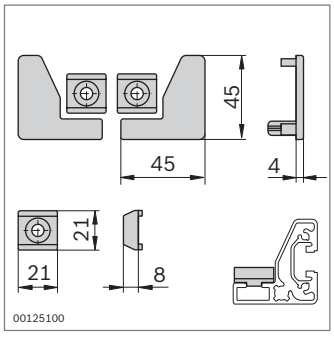

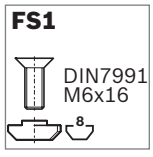

Stopper and cover cap

- The stopper prevents containers from shifting on the angle profile
- Cover cap to prevent injuries at open profile ends
- Attractive design

Stopper, cover cap	Color	ESD		No.	FS
Set	Signal gray		20	**3 842 554 490**	2xFS1
Set	Black		20	**3 842 554 491**	2xFS1

Material: PA
Fastening material: Steel; galvanized
Scope of delivery: Incl. fastening material (FS)

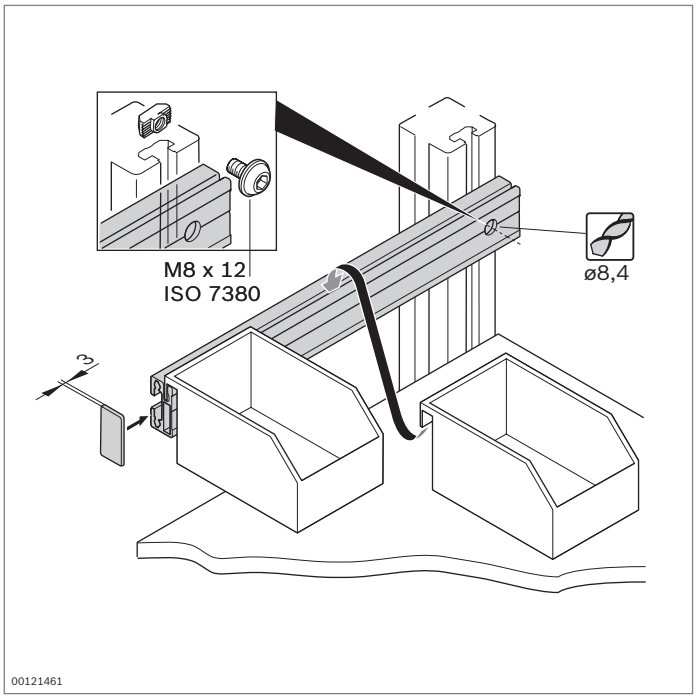

Suspension profile

- For the fast, secure suspension of grab containers, grab ledges, grab trays, and tool holders
- Profile finishing:
  Through-hole for screwdriver
- Matching grab containers in the Manual Production Systems catalog (**3 842 538 280**)

Required accessories:
- Screw
- T-nut (p. 3-4)

A = 2,0 cm²
I_x = 2,0 cm⁴
I_y = 0,5 cm⁴
W_x = 2,7 cm³
W_y = 0,3 cm³
m = 0,6 kg/m

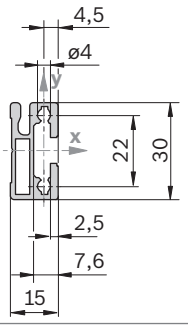

00109298

Suspension profile		L (mm)	ESD	No.
1 pc		50 ... 3000		**3 842 993 411 / L**
10 pcs		3000		**3 842 537 679**
1 pc		50 ... 3000		**3 842 993 063 / L**
10 pcs		3000		**3 842 554 157**

Material: Suspension profile: Aluminum; anodized
Suspension profile ESD: Aluminum; natural

Cover cap	Color	ESD		No.
15x30	Signal gray		20	**3 842 551 582**
15x30	Black		20	**3 842 551 583**

Material: PP

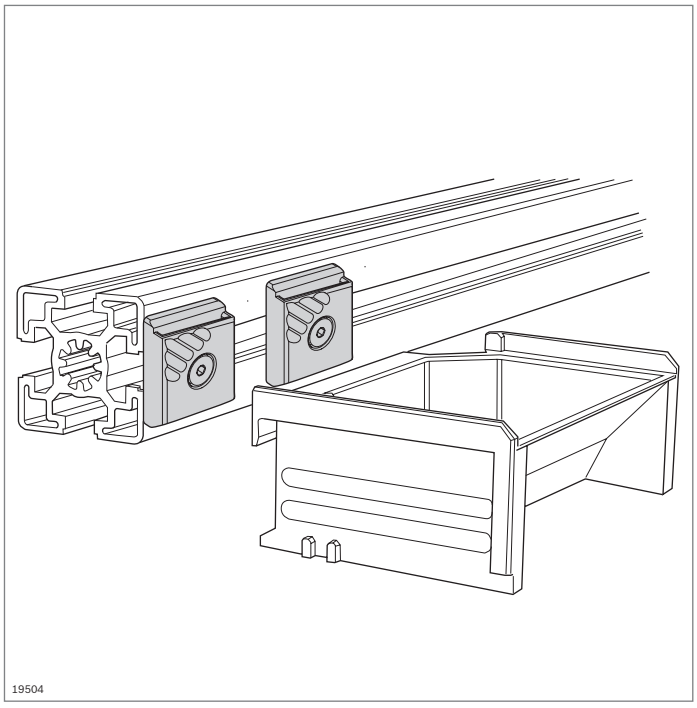

Container mount

- Container mount for mounting tool holders, grab containers, grab trays and grab ledges
- Suitable for 8 mm and 10 mm slots

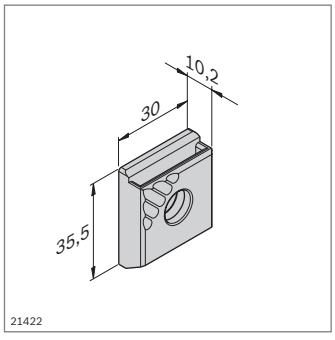

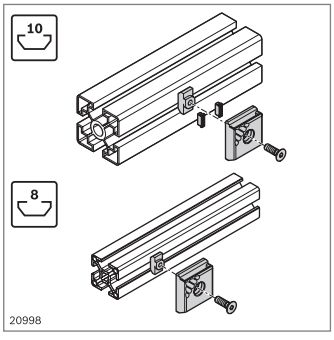

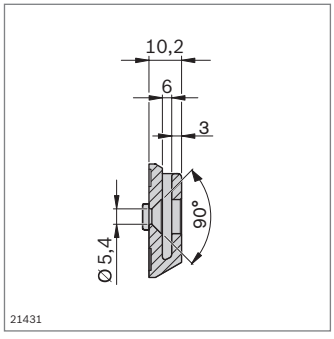

Container mount		ESD	No.
	10		**3 842 544 797**

Material: PA 66; black
Fastening material: Steel; galvanized
Scope of delivery: Incl. fastening material (FS)

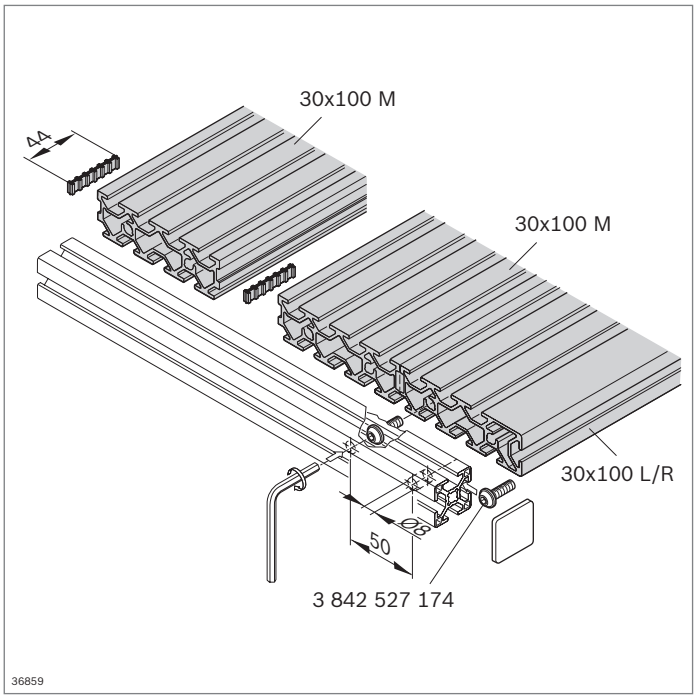

Grooved plate 30x100

- Modular plate profiles with multiple slots for experimental constructions of any size
- Slot spacing 25 mm
- Slot size 8.9 mm
- 8 mm slot connectors may be used

Optional accessories:
- Profile 30x30 (p. 2-16)
- Sliding block

30x100 L/R

A = 9,7 cm²
I_x = 88,8 cm⁴
I_y = 9,2 cm⁴
W_x = 17,8 cm³
W_y = 6,0 cm³
m = 2,6 kg/m

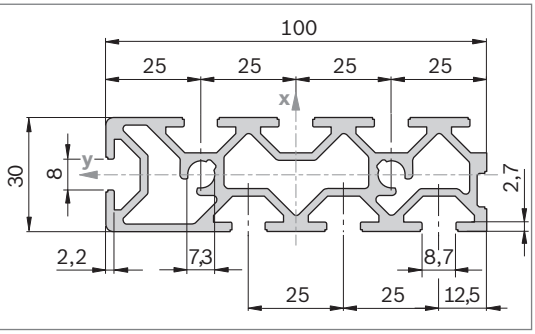

- Grooved plate **30x100 L/R** with lateral 8 mm slot as outer stop

Grooved plate 30x100 L/R		Slot	L (mm)	No.
1 pc		8	100 ... 5600	**3 842 993 337 / L**
18 pcs		8	5600	**3 842 542 696**

Material: Aluminum; anodized

30x100 M

A = 9,7 cm²
I_x = 88,8 cm⁴
I_y = 9,2 cm⁴
W_x = 17,8 cm³
W_y = 6,0 cm³
m = 2,6 kg/m

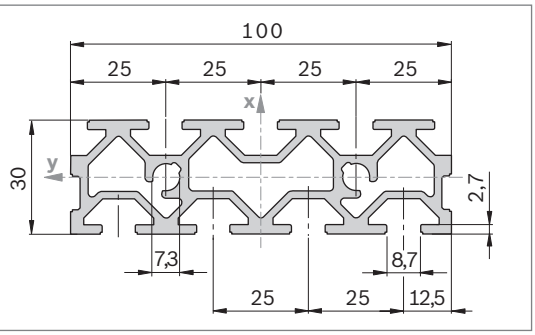

- Grooved plate **30x100 M** for constructing grooved plates of any width

Grooved plate 30x100 M		Slot	L (mm)	No.
1 pc		8	100 ... 5600	**3 842 993 336 / L**
18 pcs		8	5600	**3 842 542 698**

Material: Aluminum; anodized

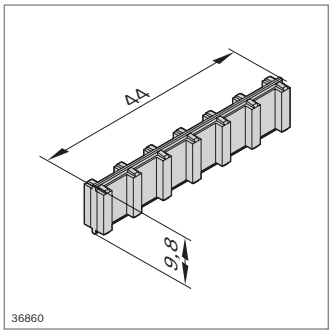

Sliding block

- For connecting grooved plates 30x100
- Recommendation: Use 3 sliding blocks per meter of profile length

Sliding block		No.
	100	**3 842 520 922**

Material: PA

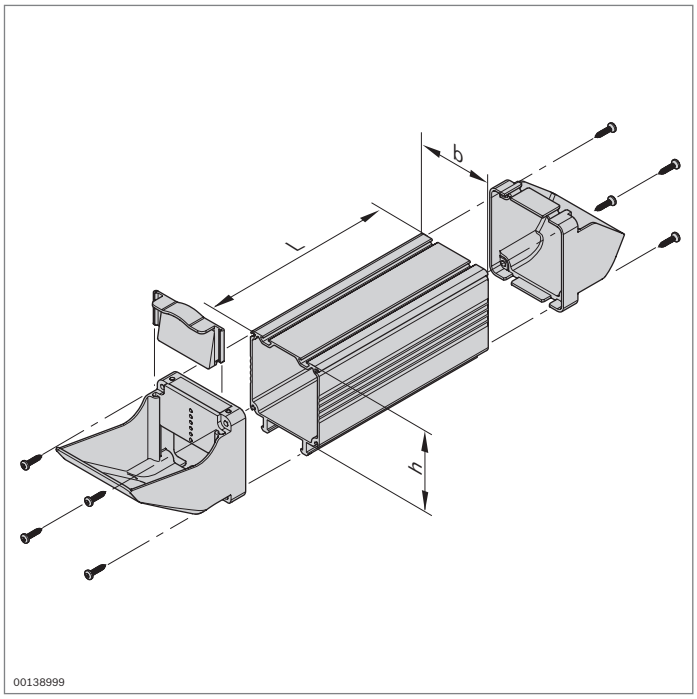

Material chute
Grab ledge and refill end-piece
Grab container base

- Small parts within easy reach on the workstation
- Components for the individual construction of stable Vario grab containers
- Customizable holding capacity

90x45

A = 7,0 cm²
I_x = 20,7 cm⁴
I_y = 54,3 cm⁴
m = 1,8 kg/m

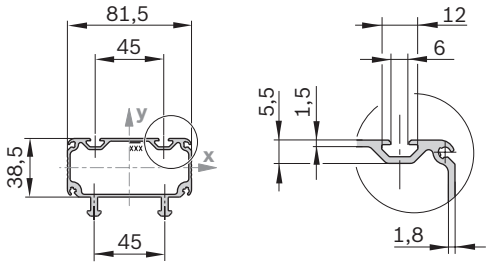

Material chute 90x45		L (mm)	ESD	No.
	1 pc	50 ... 3000		**3 842 993 071 / L**
	3 pcs	3000		**3 842 526 671**
	1 pc	50 ... 1500	ESD	**3 842 993 446 / L**
	6 pcs	1500	ESD	**3 842 558 332**

Material: Material chute: Aluminum; anodized
Material chute ESD: Aluminum; coated with Alutin

90x90

A = 9,6 cm²
I_x = 118,8 cm⁴
I_y = 88,1 cm⁴
m = 2,5 kg/m

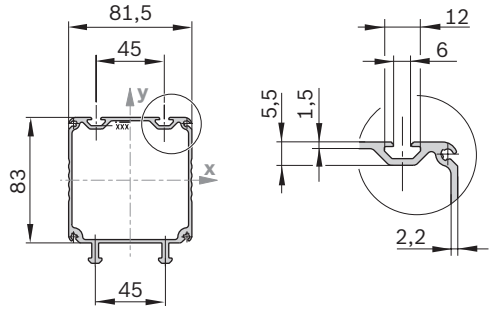

Material chute 90x90		L (mm)	ESD	No.
	1 pc	50 ... 3000		**3 842 993 072 / L**
	3 pcs	3000		**3 842 526 672**
	1 pc	50 ... 1500	ESD	**3 842 993 517 / L**
	6 pcs	1500	ESD	**3 842 558 333**

Material: Material chute: Aluminum; anodized
Material chute ESD: Aluminum; coated with Alutin

180x90

A = 15,5 cm²
I_x = 208,2 cm⁴
I_y = 597,5 cm⁴
m = 4,2 kg/m

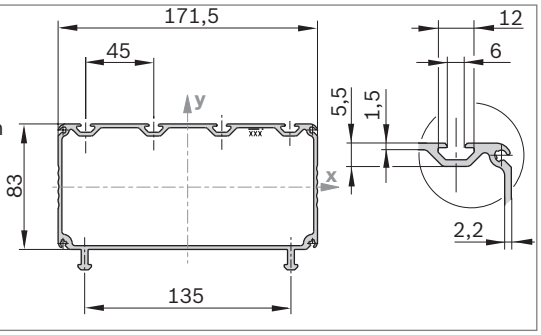

Material chute 180x90		L (mm)	ESD	No.
	1 pc	50 ... 3000		**3 842 993 073 / L**
	3 pcs	3000		**3 842 526 673**
	1 pc	50 ... 1500	ESD	**3 842 993 527 / L**
	6 pcs	1500	ESD	**3 842 558 334**

Material: Material chute: Aluminum; anodized
Material chute ESD: Aluminum; coated with Alutin

90x45

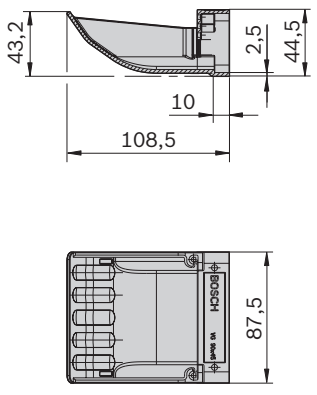

19925

90x45

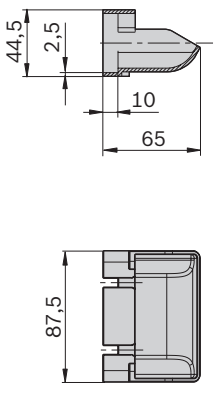

19926

- Refill end-piece with large opening for easy filling
- Ergonomically designed grab ledge for easy, safe grabbing
- Grab container pusher for closing

Grab ledge and refill end-piece	ESD	No.	FS
90 x 45		**3 842 526 626**	8xFS1, FS2
	⚠	**3 842 558 328**	8xFS1, FS2

Material: Grab ledge and refill end-piece
Plastic ABS, light gray RAL 7035
Grab ledge and refill end-piece ESD:
ABS plastic, black, similar to RAL 9005
Fastening material: Steel; galvanized

Scope of delivery: Incl. fastening material (FS)

FS1



FS2

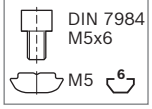

90x90
180x90

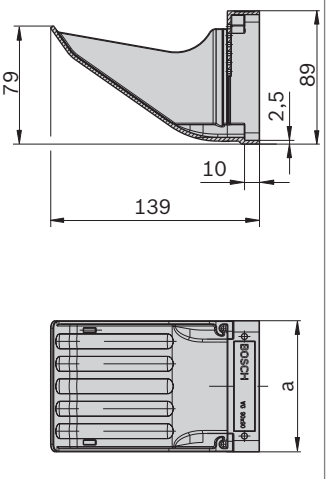

	90x90	180x90
a	87,5	172,5

36885

90x90
180x90

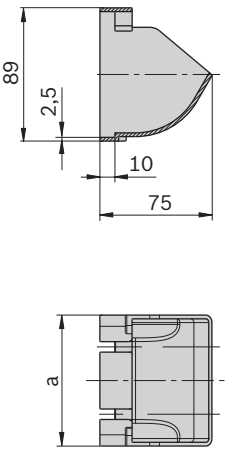

	90x90	180x90
a	87,5	172,5

36886

Grab ledge and refill end-piece	ESD	No.	FS
90 x 90		**3 842 526 627**	8xFS1, FS2
	⚠	**3 842 558 329**	8xFS1, FS2
180 x 90		**3 842 526 628**	8xFS1, FS2
	⚠	**3 842 558 330**	8xFS1, FS2

Material: Grab ledge and refill end-piece
Plastic ABS, light gray RAL 7035
Grab ledge and refill end-piece ESD:
ABS plastic, black, similar to RAL 9005
Fastening material: Steel; galvanized

Scope of delivery: Incl. fastening material (FS)

FS1



FS2

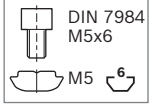

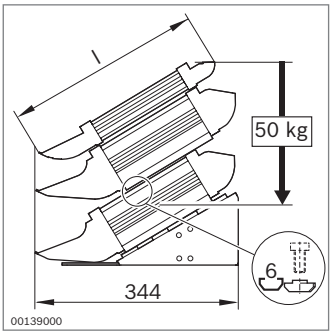

00139000

- Grab container base for an ergonomically optimized arrangement of grab containers

Grab container base	w x h x l (mm)	ESD	No.
SG 90	90 x 149 x 315		**3 842 526 660**
		⚠	**3 842 558 331**
SG 180	180 x 149 x 315		**3 842 526 665**
		⚠	**3 842 559 310**

Material: Grab container base: Sheet steel, light gray powder coating (RAL 7035)
Grab container base ESD: Sheet steel; dusty gray (RAL 7037)

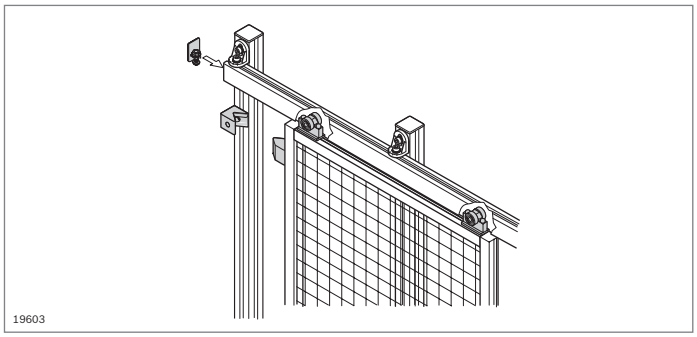

Profile rail, trolley

- Profile rail and trolley for movable mounting of parts, e.g. for use as a screwdriver hanger at work tables or for EcoSafe sliding doors (p. 10-14)

Accessories:

See page 12-4

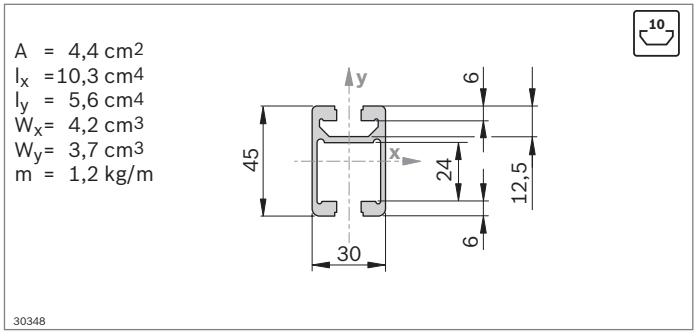

Profile rail 30x45C		L (mm)	No.
1 pc		50 ... 6070	**3 842 992 946 / L**
20 pcs		6070	**3 842 557 950**

Material: Aluminum; anodized

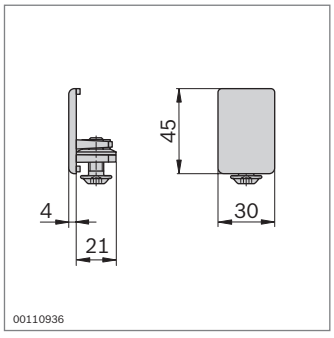

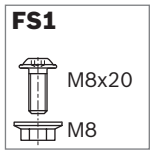

- Profile rail end piece for use for trolley as a cover cap with stop
- With screw protection

End piece 30x45C	Color	ESD		No.	FS
	Signal gray		20	**3 842 554 710**	FS1
	Black		20	**3 842 554 711**	FS1

Material: End piece: PA
Fastening material: Steel; galvanized

Scope of delivery: Incl. fastening material (FS)

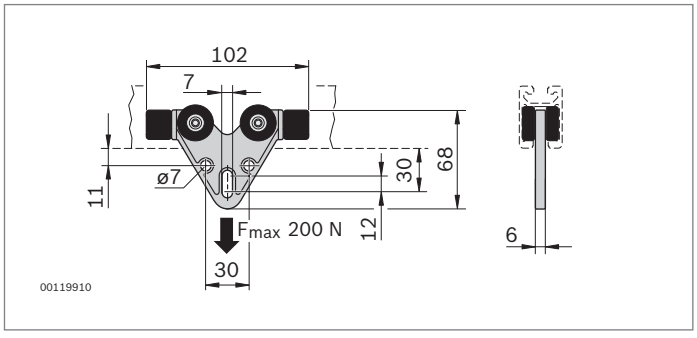

- Trolley with eye, e.g. for suspending a snap hook

Trolley for profile rail 30x45C	No.
	3 842 521 510

Material: Trolley: PA 6; black
Cam roller: POM; natural
Rubber buffer: NK/SBR; black

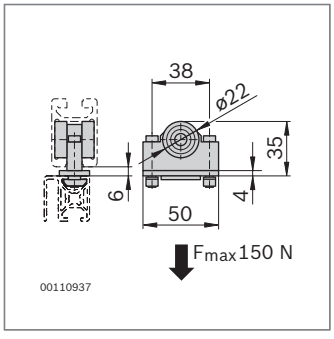

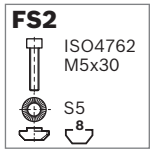

- Trolley with dust-proof ball bearings for smooth sliding motion
- For fastening profiles with a 8 mm slot

Trolley	No.	FS
	3 842 524 153	2xFS2

Material: PA; black / steel, galvanized
Fastening material: Steel; galvanized

Scope of delivery: Incl. fastening material (FS)

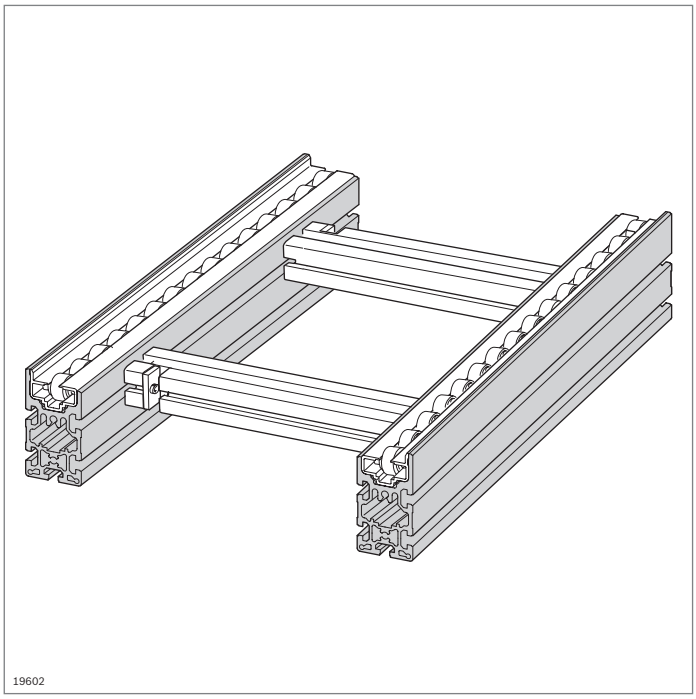

Profiles for installing conveyor media



- Profiles that are normally used to construct the transfer systems TS 2*plus* and TS 4, as well as Lean conveyor sections, are also suitable for the construction of manual conveyor sections. Detailed information is available in chapter 12 “Elements for manual movement” and in the respective special catalogs

U-profile

A = 4,4 cm²
I_x = 10,4 cm⁴
I_y = 8,3 cm⁴
W_x = 4,6 cm³
W_y = 4,1 cm³
m = 1,2 kg/m

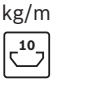

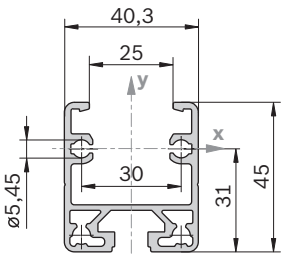

36861

U-profile		Slot	L (mm)	ESD	No.
1 pc		10	50 ... 6070		**3 842 993 316 / L**
20 pcs		10	6070		**3 842 535 115**
1 pc		10	50 ... 6070	ESD	**3 842 995 027 / L**
20 pcs		10	6070	ESD	**3 842 541 814**

Material: U-profile: Aluminum; anodized
U-profile ESD: Aluminum, untreated

SP 2/R

A = 5,2 cm²
I_x = 4,3 cm⁴
I_y = 11,7 cm⁴
W_x = 2,4 cm³
W_y = 5,2 cm³
m = 1,4 kg/m

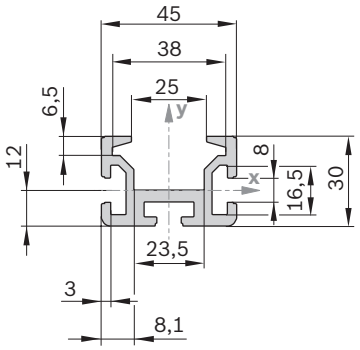

19893

Section profile SP 2/R	L (mm)	No.
	50 ... 6070	**3 842 992 676**

Material: Aluminum, natural-colored, anodized

SP 2/B

A = 10,4 cm²
I_x = 49,6 cm⁴
I_y = 25,8 cm⁴
W_x = 12,1 cm³
W_y = 11,5 cm³
m = 2,8 kg/m

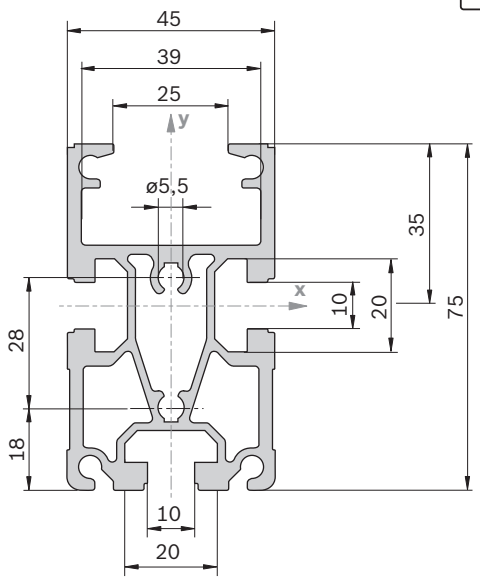

19903

Section profile SP 2/B		Slot	L (mm)	No.
1 pc		10	200 ... 6070	**3 842 992 884 / L**
16 pcs		10	6070	**3 842 532 695**

Material: Aluminum, natural-colored, anodized

SP 2/B-50

A = 6,9 cm²
I_x = 16,1 cm⁴
I_y = 16,9 cm⁴
W_x = 5,3 cm³
W_y = 7,5 cm³
m = 1,9 kg/m

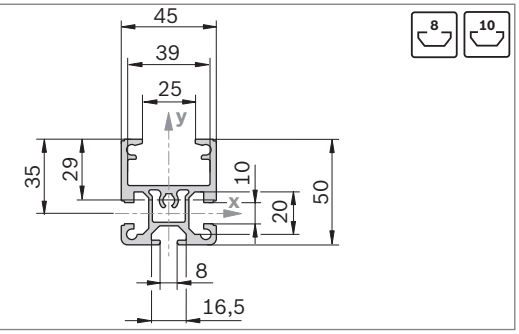

19904

Section profile SP 2/B-50		Slot	L (mm)	No.
1 pc		8 / 10	200...6070	**3 842 992 903 / L**
20 pcs		8 / 10	6070	**3 842 532 697**

Material: Aluminum, natural-colored, anodized

SP 2/B-100

A = 11,9 cm²
I_x = 95,1 cm⁴
I_y = 30,4 cm⁴
W_x = 20,0 cm³
W_y = 13,5 cm³
m = 3,2 kg/m

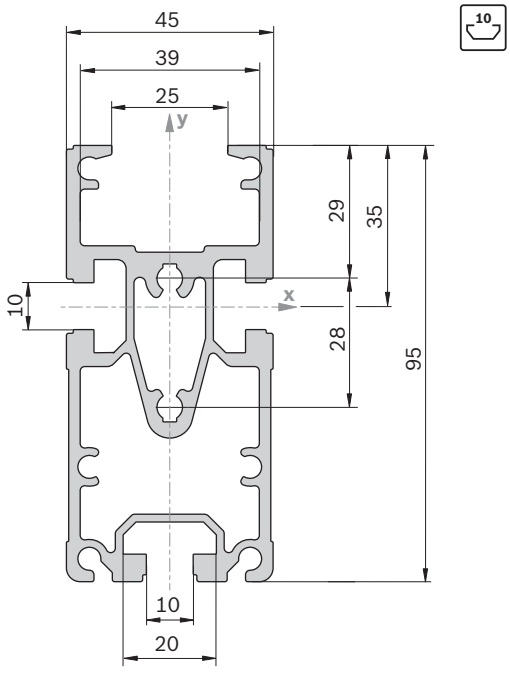

19905

Section profile SP 2/B-100		Slot	L (mm)	No.
1 pc		10	200...6070	**3 842 993 259 / L**
16 pcs		10	6070	**3 842 532 608**

Material: Aluminum, natural-colored, anodized

SP 2/BH

A = 12,4 cm²
I_x = 53,7 cm⁴
I_y = 28,6 cm⁴
W_x = 14,0 cm³
W_y = 13,8 cm³
m = 3,3 kg/m

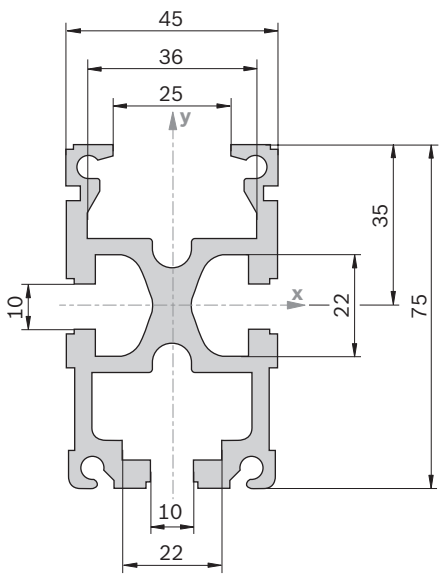

19906

Section profile SP 2/BH		Slot	L (mm)	No.
1 pc		10	200 ... 6070	**3 842 990 409 / L**
16 pcs		10	6070	**3 842 532 696**

Material: Aluminum, natural-colored, anodized

SP 4/R

A = 26,1 cm²
I_x = 222,0 cm⁴
I_y = 95,5 cm⁴
W_x = 84,9 cm³
W_y = 16,4 cm³
m = 3,5 kg/m

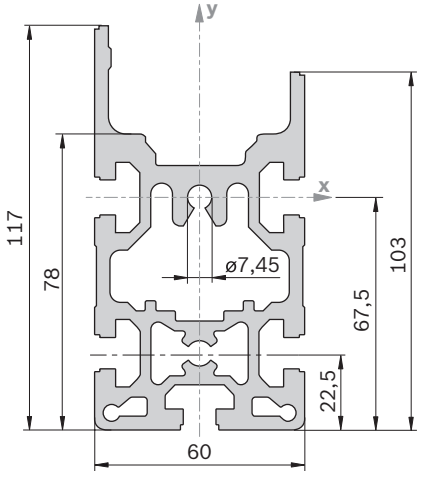

19907

Section profile SP 4/R		Slot	L (mm)	No.
10 pcs		10	6070	**3 842 532 505**

Material: Aluminum, natural-colored, anodized

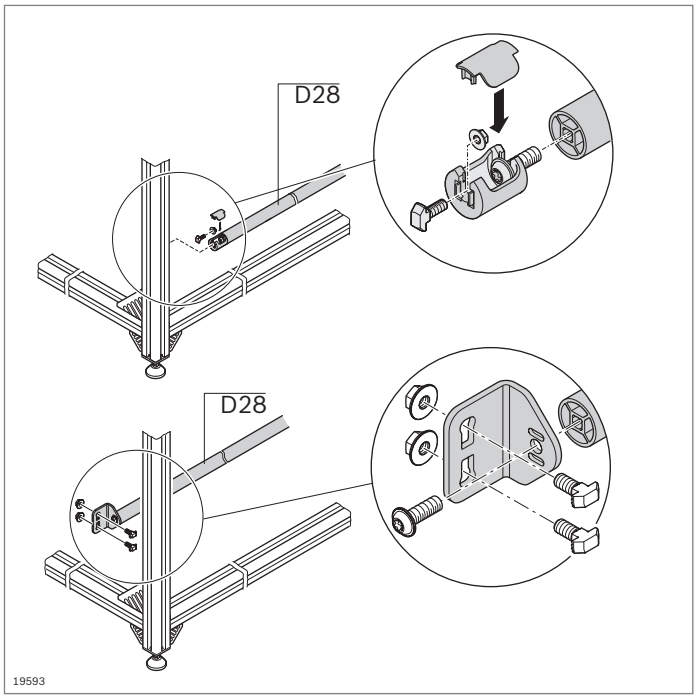

Round tube D28, strut profile D28x55 bracket, T-connector Bracket, T-connector

- For constructing cross ties in flow racks or workstations
- Suitable for heavy loads
- Use of brackets makes for easy assembly
- Elongated hole in the mounting bracket for longitudinal compensation
- Central holes can be used for self-tapping screws S8x25 (p. 3-41)
- For matching components to construct conveyor tracks, see chapter 12 “Elements for manual movement”

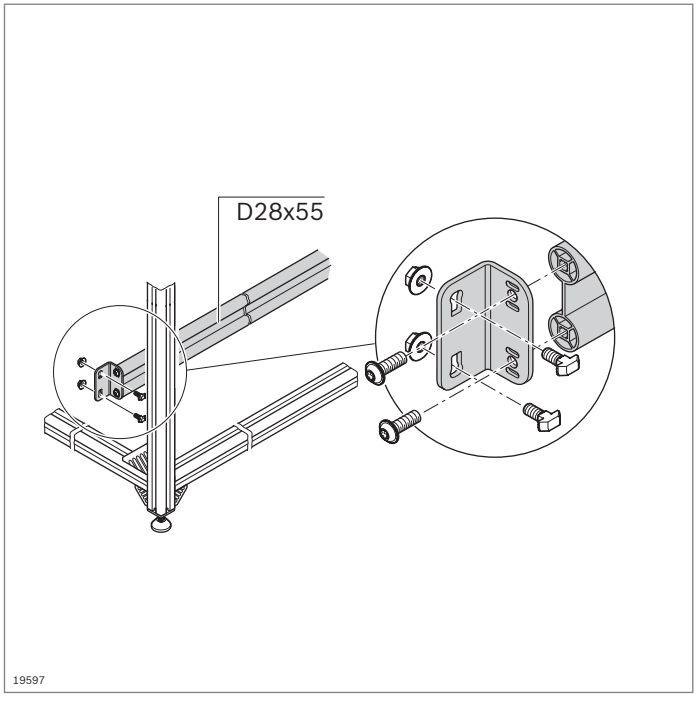

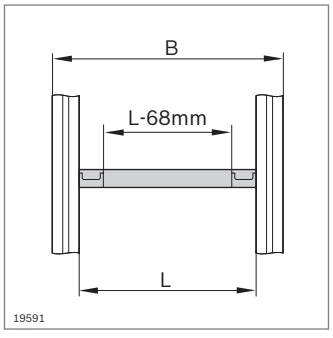

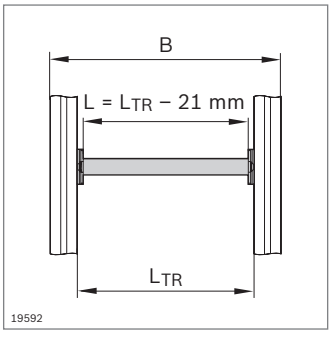

D28

A = 2,4 cm²
I_x = 1,5 cm⁴
I_y = 1,5 cm⁴
W_x = 1,1 cm³
W_y = 1,1 cm³
m = 0,7 kg/m

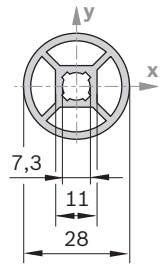

19505

Round tube D28		L (mm)	No.
	1 pc	50 ... 6070	**3 842 993 317 / L**
	20 pcs	6070	**3 842 535 118**

Material: Aluminum; anodized
Optional accessories: Labeling clip (p. 2-86)

Cover cap D28	Color	ESD		No.
	Gray		20	**3 842 537 718**
	Black		20	**3 842 535 835**

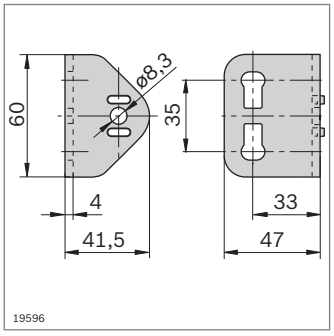

19596

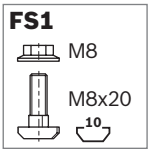



Holding bracket for round tube D28

- For mounting a round tube D28 to a strut profile with a 10 mm slot
- Extremely simple mounting thanks to easy adjustment of the installation height

Bracket 60x47x4		No.	FS
	20	**3 842 536 002**	2xFS1, FS2

Material: Steel; galvanized
Scope of delivery: Incl. fastening material (FS)

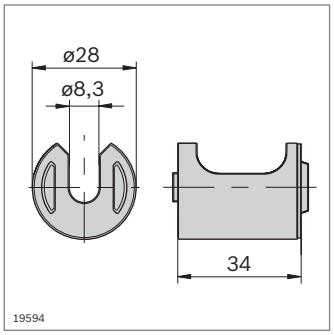

19594



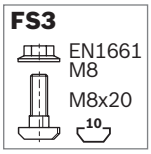

T-connector for round tube D28

- For mounting a round tube D28 to a strut profile with a 10 mm slot
- Without interfering contours

T-connector D28		No.	FS
	20	**3 842 532 879**	FS2, FS3

Material: T-connector: Diecast aluminum
Cover cap: ABS; black
Scope of delivery: Incl. cover cap, fastening material (FS)

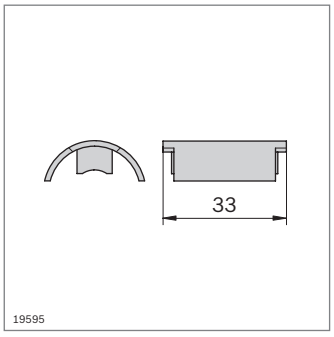

19595

Cover cap D28		No.
	20	**3 842 532 878**

Material: ABS; black

D28x55

A = 5,9 cm²
I_x = 3,2 cm⁴
I_y = 88,3 cm⁴
W_x = 2,3 cm³
W_y = 23,1 cm³
m = 1,6 kg/m

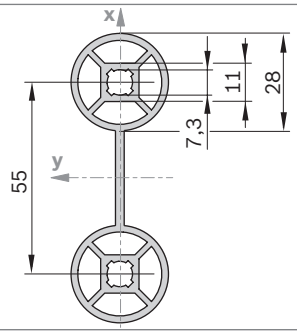

19468

Strut profile D28x55		L (mm)	No.
1 pc		100...6070	**3 842 993 489 / L**
20 pcs		6070	**3 842 537 477**

Material: Aluminum; anodized
Optional accessories: Labeling clip (p. 2-86)

Cover cap D28	Color	ESD		No.
(2x)	Gray		20	**3 842 537 718**
(2x)	Black		20	**3 842 535 835**

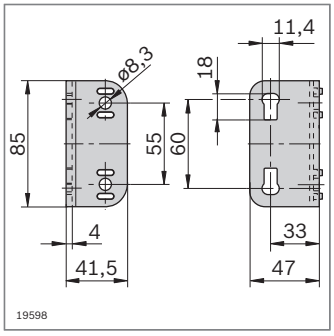

19598

FS1

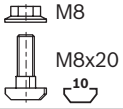

FS2



Bracket 85x47x4

- For mounting a strut profile D28x55 to a strut profile with a 10 mm slot
- Extremely simple mounting thanks to easy adjustment of the installation height

Bracket 85x47x4		No.	FS
	20	**3 842 536 730**	2xFS1, 2xFS2

Material: Steel; galvanized
Scope of delivery: Incl. fastening material (FS)

EcoShape tubular framing system

- All connectors can be combined with the EcoShape D28L round tubes and D28L, N10, and the D28 round tube
- Integrated poka-yoke system for easy and secure connector installation
  - Anti-torsion element for secure joints
  - Form-fit connection
- All connectors are suitable for setting up ESD-conductive systems.

Material: Diecast zinc
Scope of delivery: Incl. Fastening material



32 components – countless options

The EcoShape system is characterized by its consistent simplicity and efficiency: Using just a few components, you can build complete assembly lines as well as simple transport shuttles.

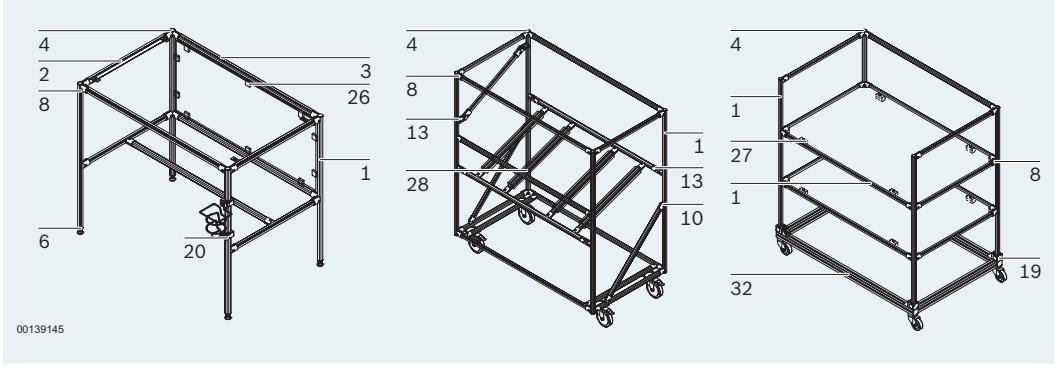

1 Round tube D28L

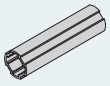
24878

2 Round tube D28L, N10

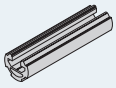
24879

3 Slide rail

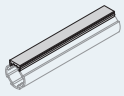
24880

4 Cover cap D28L

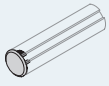
24881

5 Cover cap D28L, N10

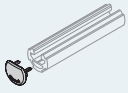
24882

6 Threaded sleeve D28L, PA


24883

7 Threaded sleeve D28L, Zn

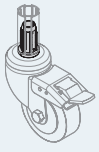
24884

8 90° Connector

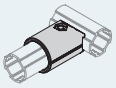
24885

9 Parallel connector

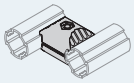
24886

10 45° Connector

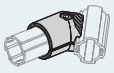
24887

11 Strut D28L, 45°

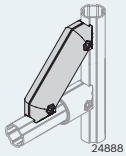
24888

12 Cross connector

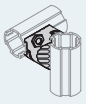
24889

13 0°-90° Connector

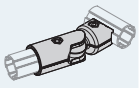
24890

14 0°-90° D28 connector

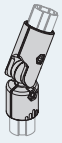
24891

15 Corner bracket D28


24892

16 Swivel bearing D28L

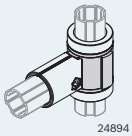
24894

17 Bushing

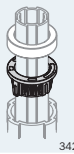
34277

18 Retaining ring D28L


24893

19 Adapter N8, N10

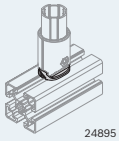
24895

20 Adapter N10/45

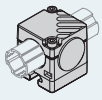
24896

21 Adapter N10/30

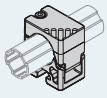
24897

22 Adapter mount D28L

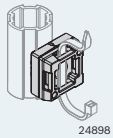
24898

23 Adapter XLean

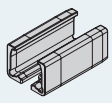
24899

24 Tube clamp D28L, N10

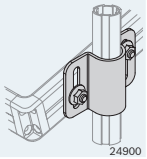
24900

25 Hinge D28L/D28L

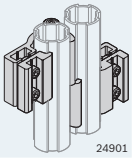
24901

26 Hinge D28L/-

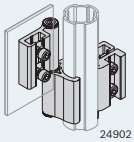
24902

27 PA Variofix block

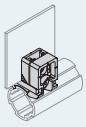
24903

28 Variofix block Zn

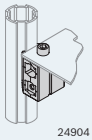
24904

29 Impact protection

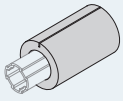
24905

30 Ring D50

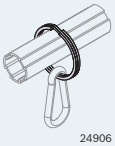
24906

31 Rubber foot D28


24907

32 Stopper D28L, N10

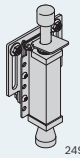
24908

1
A = 1,8 cm²
I_x = 1,3 cm⁴
I_y = 1,3 cm⁴
W_x = 1,0 cm³
W_y = 1,0 cm³
m = 0,5 kg/m

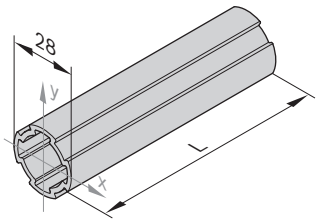

36806

- D28L round tube with 4 interfaces for attaching EcoShape connectors

Round tube D28L		L (mm)	No.
1 pc		50 ... 6070	**3 842 996 191/L**
50 pcs		6070	**3 842 557 243**

Material: Aluminum; anodized

2
A = 2,6 cm²
I_x = 1,2 cm⁴
I_y = 2,0 cm⁴
W_x = 0,8 cm³
W_y = 1,4 cm³
m = 0,7 kg/m

10

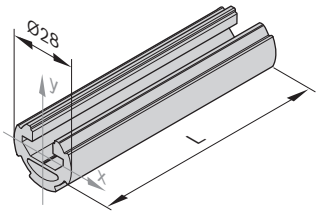

36807

- D28L round tube, N10 with 10 mm slot for mounting accessories from the MGE modular system
- Three interfaces for attaching EcoShape connectors

Round tube D28L, N10		L (mm)	No.
1 pc		50 ... 6070	**3 842 996 192/L**
20 pcs		6070	**3 842 557 244**

Material: Aluminum; anodized

3

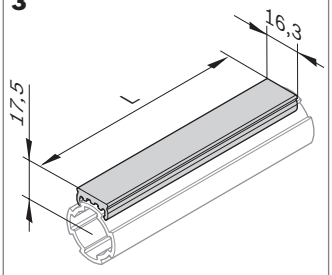

00134987

- Slide rail for creating a simple conveyor track or manual slide section by clipping the slide rail onto the D28L round tube or D28L, N10 round tube

Slide rail	Color	L (mm)	ESD		No.
	Signal gray	2000		10	**3 842 554 750**
	Black	2000		10	**3 842 548 117**

Material: PVC

4
D28L

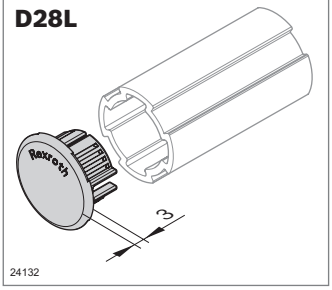

24132

5
D28L, N10

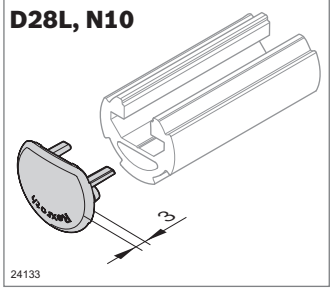

24133

- Cover cap for D28L round tube and D28L, N10 round tube

Cover cap	Color	ESD		No.
D28L	Signal gray		20	**3 842 554 752**
	Black		20	**3 842 548 129**
D28L, N10	Signal gray		20	**3 842 554 754**
	Black		20	**3 842 548 130**

Material: PA6

6

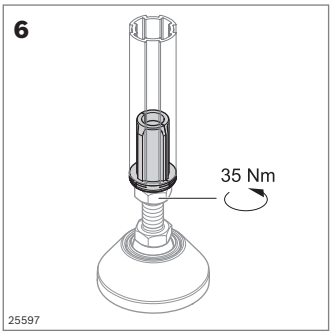

25597

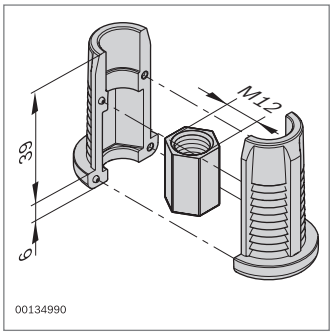

00134990

- Threaded sleeve for incorporating a leveling foot or castor wheel. For further information (see page 6-7)

Threaded sleeve D28L, PA	ESD		No.
		20	**3 842 541 185**

Material: PA66 (conductive); black
Hexagon nut: Aluminum

7

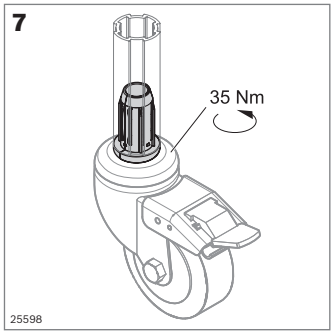

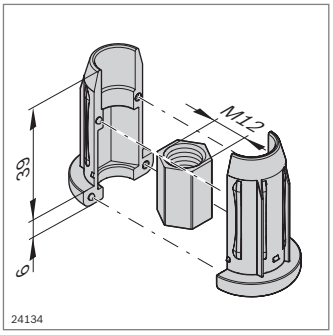

Threaded sleeve D28L, Zn	ESD		No.
		20	**3 842 548 119**

Material: Diecast zinc
Hexagon nut: Aluminum

8

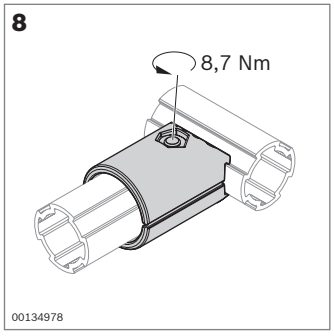

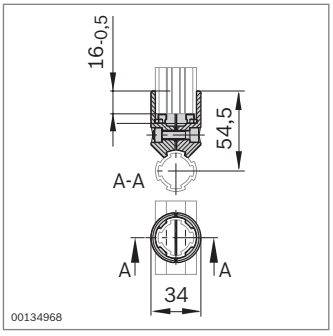

90° connector	ESD		No.	FS
		20	**3 842 541 173**	FS1

Material: Diecast zinc
Scope of delivery: Incl. fastening material (FS)

FS1
ISO 4762 M6x25
DIN EN ISO 10511 M6

9

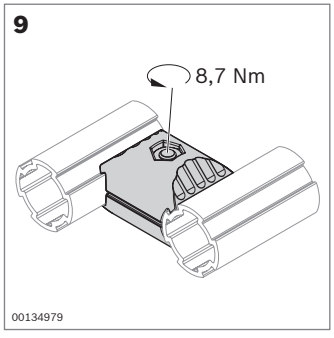

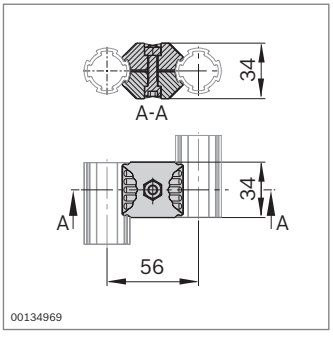

Parallel connector	ESD		No.	FS
		20	**3 842 541 183**	FS1

Material: Diecast zinc
Scope of delivery: Incl. fastening material (FS)

FS1
ISO 4762 M6x25
DIN EN ISO 10511 M6

10

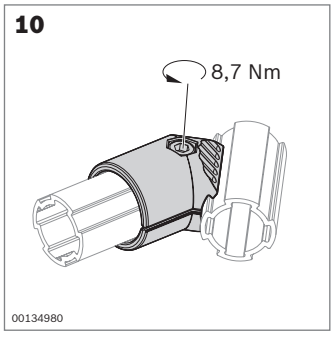

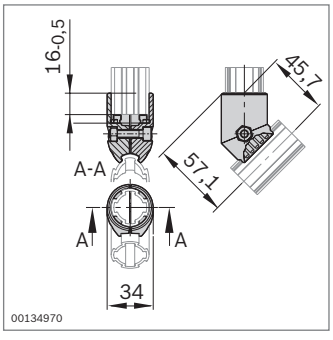

45° connector	ESD		No.	FS
		20	**3 842 541 175**	FS1

Material: Diecast zinc
Scope of delivery: Incl. fastening material (FS)

FS1
ISO 4762 M6x25
DIN EN ISO 10511 M6

11

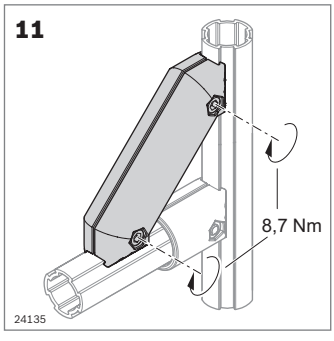

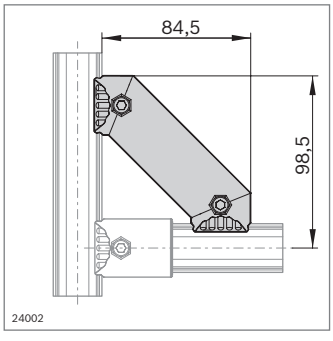

Strut D28L, 45°	ESD		No.	FS
		20	**3 842 548 118**	2xFS1

Material: Diecast zinc
Scope of delivery: Incl. fastening material (FS)

FS1
ISO 4762 M6x25
DIN EN ISO 10511 M6

12

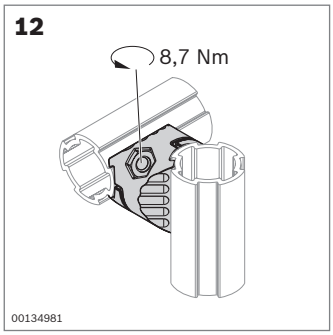

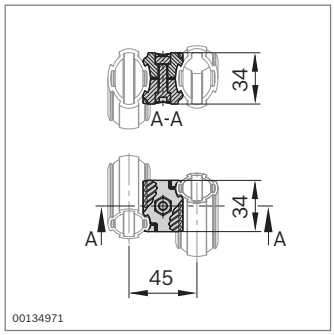

Cross connector	ESD		No.	FS
		20	**3 842 541 181**	FS1

Material: Diecast zinc
Scope of delivery: Incl. fastening material (FS)

FS1
ISO 4762 M6x25
DIN EN ISO 10511 M6

13 90° 90°

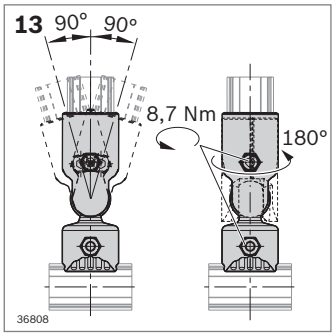

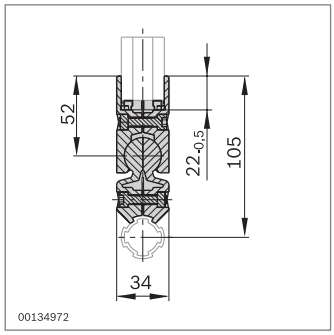

0°-90° connector	ESD		No.	FS
		20	**3 842 541 178**	2xFS1

Material: Diecast zinc
Scope of delivery: Incl. fastening material (FS)

FS1
ISO 4762 M6x25
DIN EN ISO 10511 M6

14

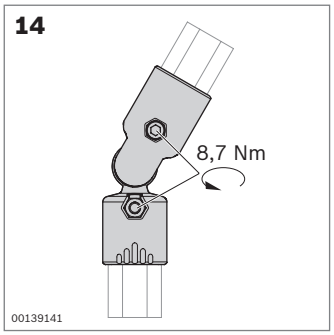

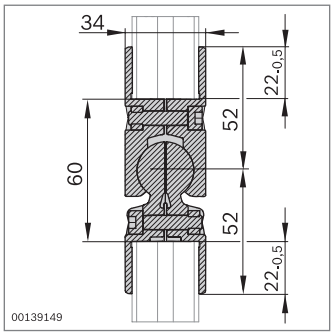

0°-90° D28 connector	ESD		No.	FS
		20	**3 842 543 480**	2xFS1

Material: Diecast zinc
Scope of delivery: Incl. fastening material (FS)

FS1
ISO 4762 M6x25
DIN EN ISO 10511 M6

15

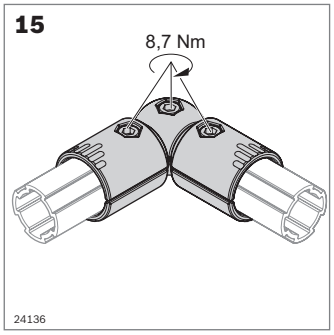

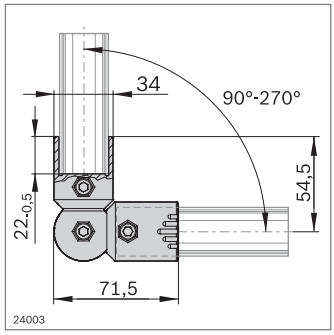

- Corner bracket D28 for easy adjustment within a 15° range
- Swivel range: 90°-270°

Corner bracket D28	ESD		No.	FS
		20	**3 842 548 123**	3xFS1

Material: Diecast zinc
Scope of delivery: Incl. fastening material (FS)

FS1
ISO 4762 M6x25
DIN EN ISO 10511 M6

16/1

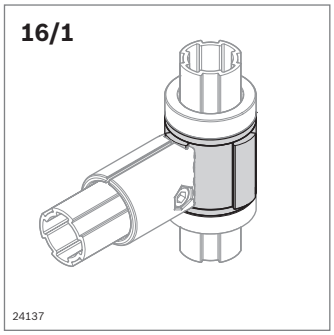

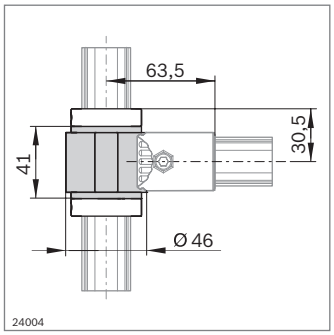

- For axial shifting along the D28L round tube or D28L, N10 round tube. The retaining ring determines the end position
- Construction of swiveling applications
- Additional thread for flexible bracket adjustment

Required accessories:
Retaining ring D28L

Swivel bearing D28L	L (mm)	ESD	No.
	34	20	**3 842 548 121**

Material: Swivel bearing: Aluminum

Scope of delivery: D28L swivel bearing, L = 34 mm D28 bushing (17), headless setscrew ISO 4026 M4x10

16/2

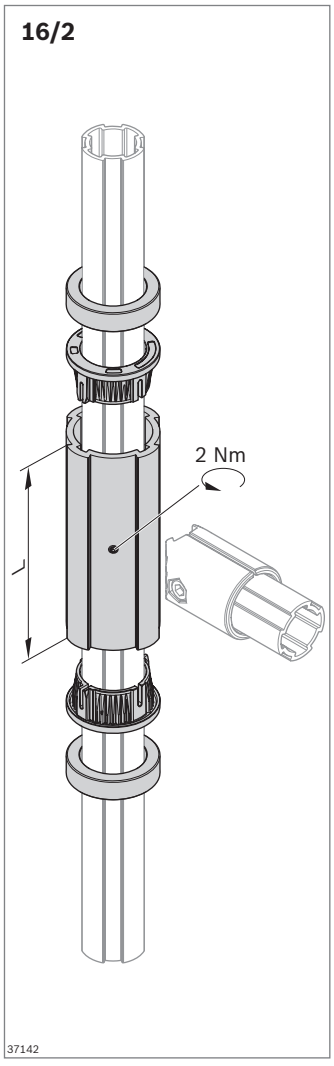

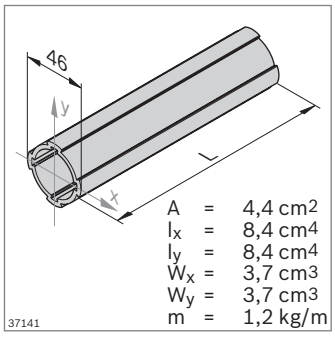

For self-assembly:

- D28L swivel bearing with L = 1000 mm that can be cut to length

Swivel bearing D28L	L (mm)		No.
	1000	2	**3 842 557 298**

Material: Swivel bearing: Aluminum

17

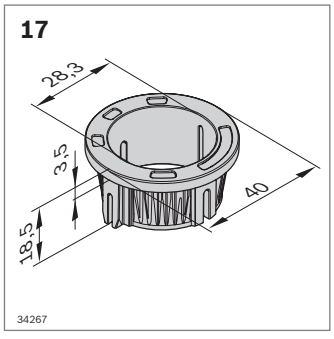

Bushing D28	L (mm)		No.
		4	**3 842 557 299**

Material: Bushing: POM; black

18

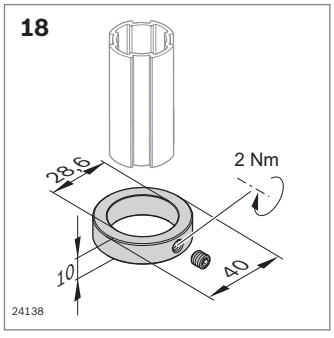

Retaining ring D28L	L (mm)	ESD	No.
		20	**3 842 548 122**

Material: Retaining ring: Aluminum

Scope of delivery: Retaining ring: incl. headless setscrew DIN 913 M6x6

19

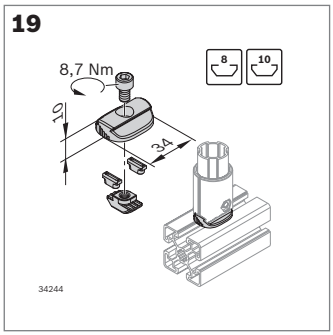

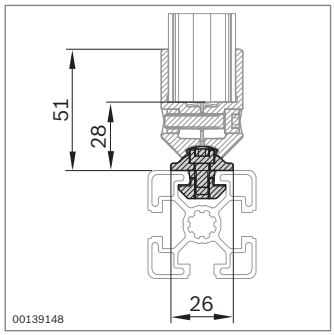

▶ N8, N10 adapter for connecting an MGE strut profile (8 mm, 10 mm slots)

Adapter N8, N10	ESD		No.	FS
		20	**3 842 543 272**	FS4, FS5

Material:	Diecast zinc
Scope of delivery:	Incl. fastening material (FS)

FS4
ISO4762 M6x10
M6 8

FS5
ISO4762 M6x12
2x M6 10

20

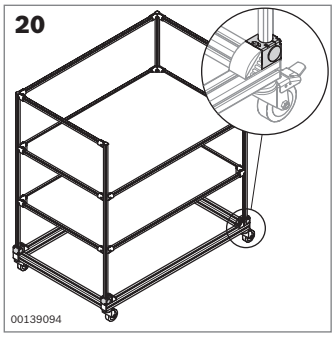

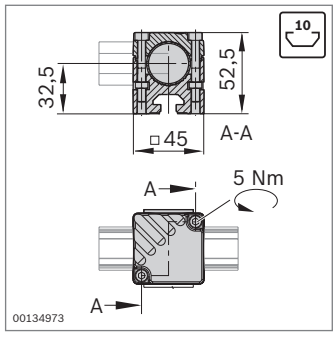

▶ N10/45 adapter for connecting D28L round tubes or D28L, N10 round tubes to profiles with a 10 mm slot

Adapter N10/45	ESD		No.	FS
		20	**3 842 541 187**	2xFS3

Material:	Adapter: Diecast zinc Cover cap: PE
Scope of delivery:	Incl. cover cap, fastening material (FS)

FS3
ISO 4762 M5x40
DIN 934 M5

21

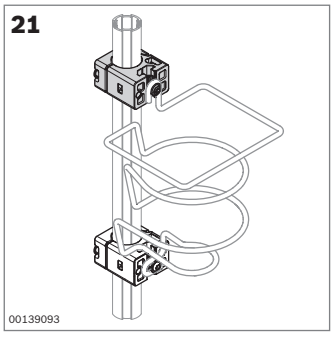

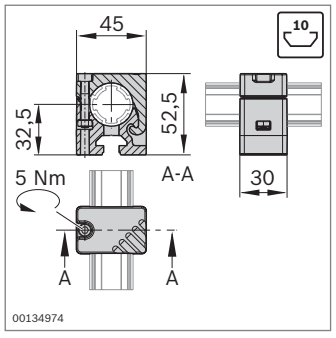

▶ N10/30 adapter for fastening light accessories such as a bottle holder to the D28L round tube

Adapter N10/30	ESD		No.	FS
		20	**3 842 541 190**	FS6

Material:	Diecast zinc
Scope of delivery:	Incl. fastening material (FS)

FS6
ISO 4762 M5x30
DIN 934 M5

22

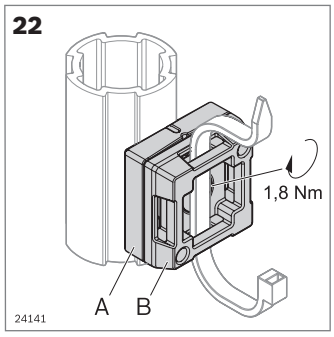

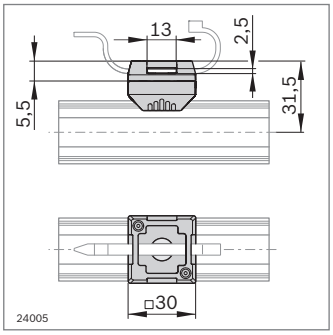

▶ For attaching cable ties

Adapter mount D28L		No.	FS
A + B	20	**3 842 548 120**	FS7

Material: PA66 (conductive); black
Scope of delivery: Incl. fastening material (FS)

FS7



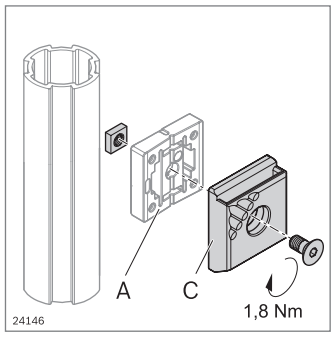

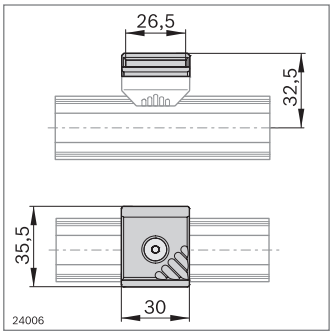

▶ For attaching containers using the container mount

Container mount	ESD		No.	FS
C		10	**3 842 544 797**	FS8, FS9

Material: PA66 (conductive); black
Scope of delivery: Incl. fastening material (FS)

FS8

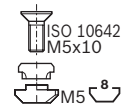

FS9

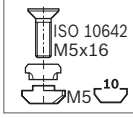

23

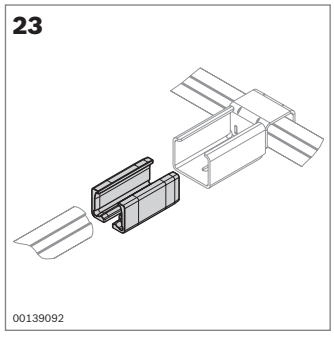

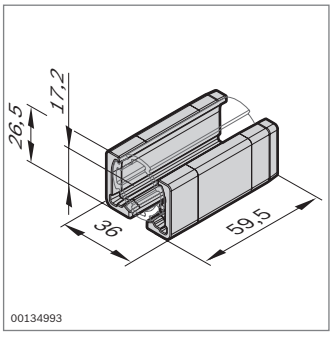

▶ XLean adapter for combination with XLean.
The XLean adapter connects the D28L round tube with the XLean rail holder (p. 12-25)

XLean adapter	ESD		No.
		20	**3 842 541 296**

Material: PA66 (conductive); black

24

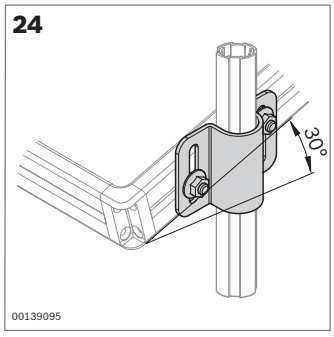

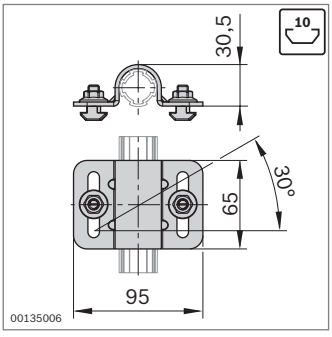

▶ Tube clamp D28L, N10 for fastening material shelves with a 10 mm slot to the D28L round tube; oblique positioning up to 30 degrees is possible

Tube clamp D28L, N10	ESD		No.	FS
		20	**3 842 541 193**	2xFS10

Material: Steel; galvanized
Scope of delivery: Incl. fastening material (FS)

FS10

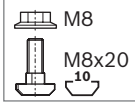

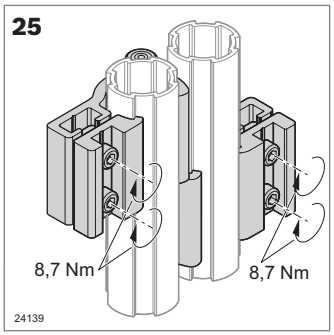

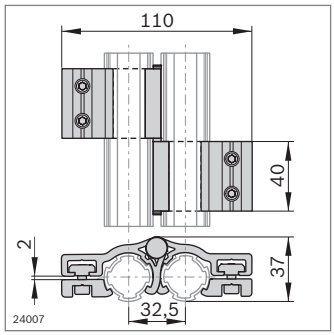

- Opening angle: 180°
- For mounting D28L round tube

Hinge D28L/D28L	ESD		No.	FS
		2	**3 842 548 126**	4x FS11, FS12

Material: Aluminum
Scope of delivery: Incl. fastening material (FS)

FS11
ISO4762 M6x10
M6 8

FS12
ISO8741 6x60
DIN125 A6,4

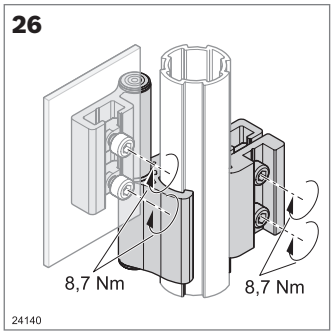

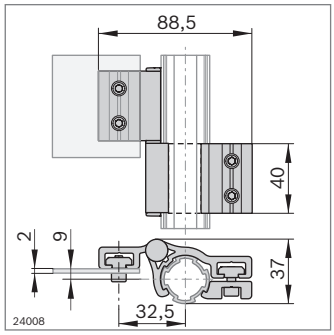

- Opening angle: 180°
- For mounting panel elements

Hinge D28L/-	ESD		No.	FS
		2	**3 842 548 127**	2x FS11, FS12

Material: Aluminum
Scope of delivery: Incl. fastening material (FS)

FS11
ISO4762 M6x10
M6 8

FS12
ISO8741 6x60
DIN125 A6,4

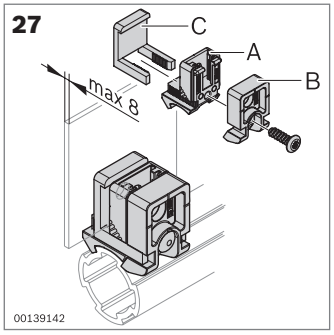

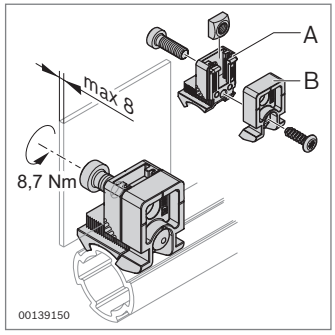

- Plastic Variofix block for fastening panel elements with snap-in clips or a screw
- Variofix remover for releasing the snap-in clip (p. 14-6)

Variofix block (PA)		No.	FS
A + B	20	**3 842 543 311**	FS13, FS14

Material: PA66 (conductive); black
Scope of delivery: Incl. fastening material (FS)

FS13
ISO 4762 M6x16
DIN 557 M6

FS14

Snap-in clip		No.
C	10	**3 842 184 738**

Material: PA6; transparent

28

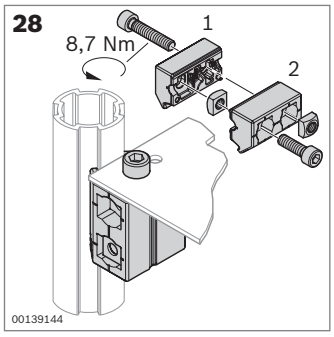

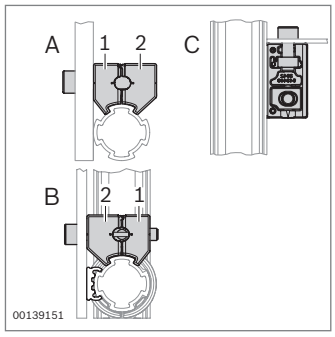

- Diecast zinc Variofix block for fastening panel elements
- Three arrangements possible (“A”, “B”, “C”)

Variofix block Zn	ESD		No.	FS
		20	**3 842 543 494**	FS15

Material: Diecast zinc
Scope of delivery Incl. fastening material (FS)

FS15
2x ISO 4762 M6x22
ISO 4762 M6x30
DIN 557 M6

29

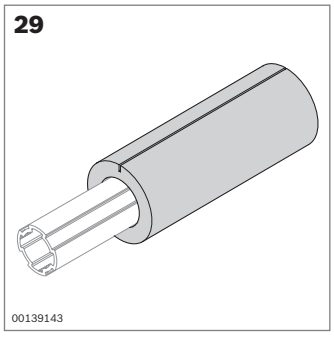

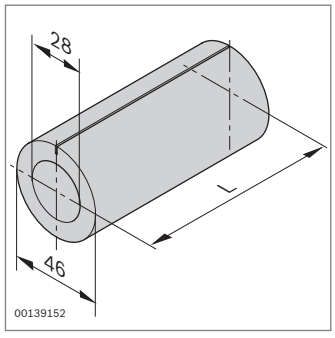

- Impact protection for D28 and D28L round tubes

Impact protection	L (mm)		No.
	2000	10	**3 842 544 637**

Material: PE-LD; gray

30

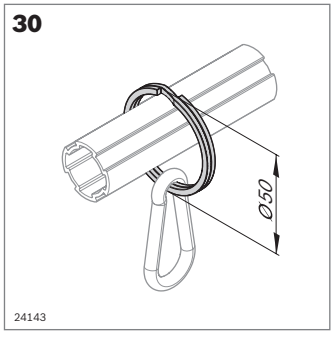

- For designing simple tool holders

Ring D50		No.
	20	**3 842 548 131**

Material: Nickel-plated steel

Spring hook		No.
	1	**0 842 901 309**

Material: Steel; galvanized

31

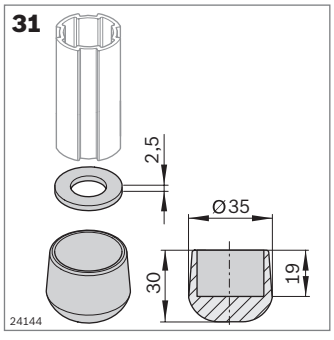

- Non-slip design of flow racks and stands

Rubber foot D28	ESD		No.	FS
		20	**3 842 548 128**	FS16

Material: NR/SBR (conductive); black

FS16
ISO 7089-14-200HV-CM

32

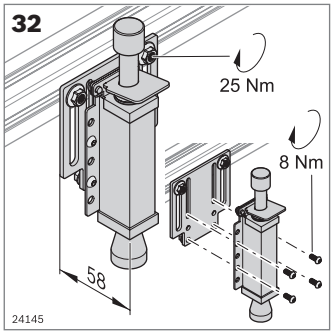

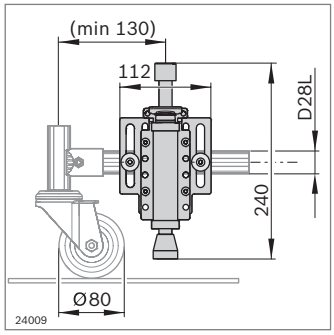

- To stop material shuttles ergonomically at just one point
- All-purpose option for attachment to different round tubes and profile cross-sections
- Stopper tension path: 34 mm

Stopper D28L, N10	No.	FS
	3 842 548 132	4x FS17, 2xFS18

Material:	Stopper: Stainless steel, EPDM Attachment plate: Aluminum
Scope of delivery:	Incl. fastening material (FS)

FS17



FS18

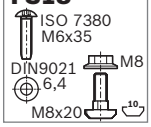

33

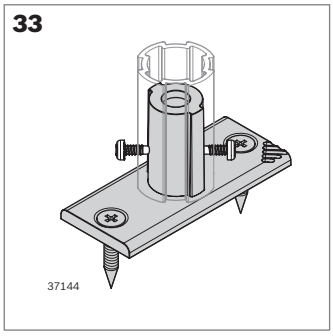

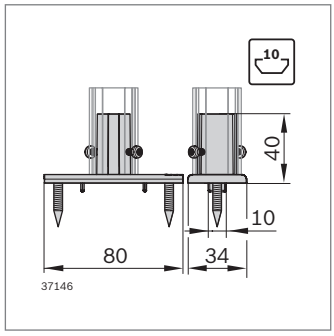

- Base plate for fastening frames directly onto walls, floors, table tops and strut profiles with 10 mm slot via EcoShape round tubes
- No additional connector required
- Anti-torsion element by centering lug (can be broken off)
- Reference load during profile installation: 15 Nm admissible in lengthwise and crosswise direction. Load values at installation on other surfaces depend on the respective material

FS19



Recommended accessories for profile installation:
Countersunk screw ISO 10642 M5x16-8.8;
T-nut (**3 842 530 283**) (p. 3-4)
Optional accessories: Self-tapping screw (**3 842 552 267**)

Base plate D28L	ESD		No.	FS
		10	**3 842 559 346**	2xFS19

Material:	Diecast zinc
Scope of delivery:	Incl. fastening material (FS)

34

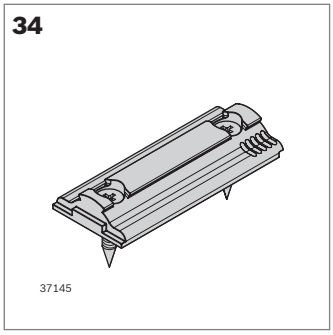

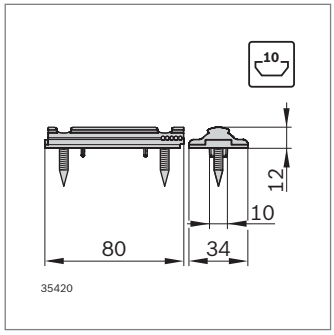

- Base plate for fastening frames onto walls, floors, table tops and strut profiles with 10 mm slot with the help of EcoShape connectors
- Anti-torsion element by centering lug (can be broken off)
- Reference load during profile installation: 15 Nm admissible in lengthwise and crosswise direction. Load values at installation on other surfaces depend on the respective material

FS19

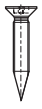

Recommended accessories for profile installation:
Countersunk screw ISO 10642 M5x16-8.8;
T-nut (**3 842 530 283**) (p. 3-4)

EcoShape base plate	ESD		No.	FS
		10	**3 842 559 345**	2xFS19

Material:	Diecast zinc
Scope of delivery:	Incl. fastening material (FS)

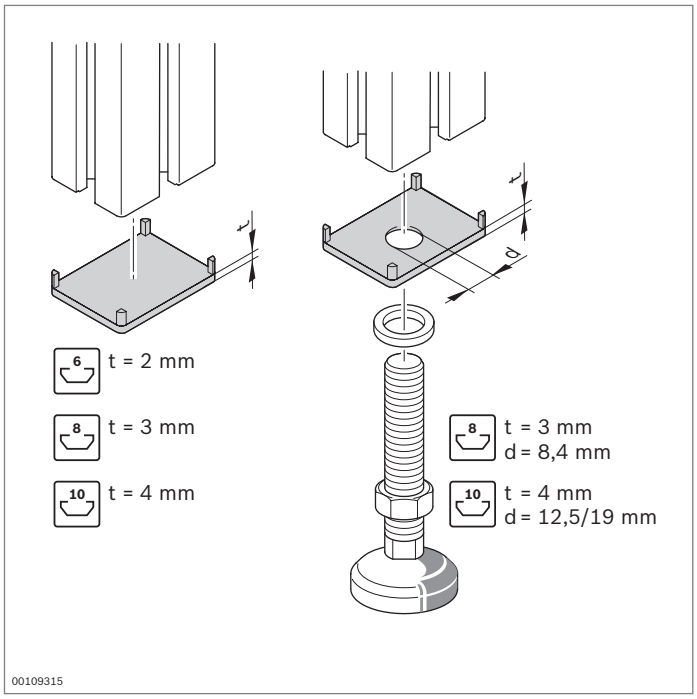

Cover cap
Cover cap with hole

ESD 6 8 10

- To prevent injuries at open profile ends
- Attractive design
- Cover cap with hole for use with leveling feet and rollers
- Cover cap material: PA or PP

Order information for the cover caps can be found in the profile section

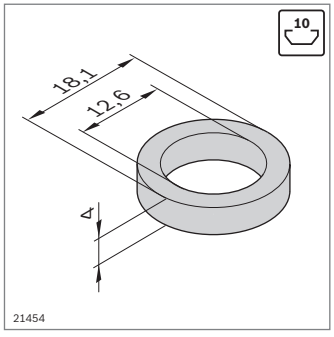

Bearing ring

- For cover caps with hole in the sizes 40x40, 45x45, 50x50 and 60x60
- For M12 threads
- To protect the cover caps when tightening accessories

Bearing ring		No.
	100	**3 842 555 653**
Material:	Diecast zinc	

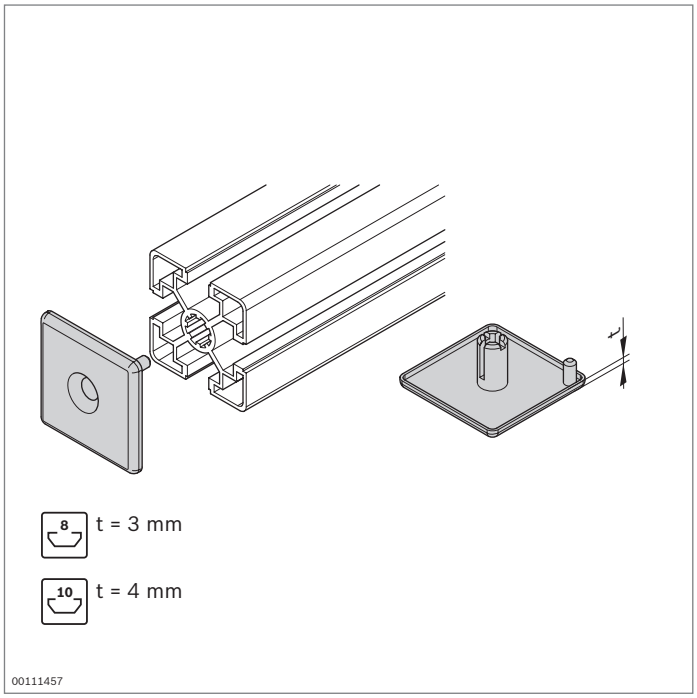

Diecast zinc cover cap

- Shock-proof
- Resistant to aggressive media
- Fastening with countersunk screw; profile finishing not required

Cover cap ZN		ESD	No.	FS
30x30-ZN			**3 842 518 204**	FS1
40x40-ZN			**3 842 541 807**	FS2
45x45-ZN			**3 842 518 205**	FS2
Material:	Cover cap: Diecast zinc Fastening material: Steel; galvanized			

FS1
DIN 7991 M4x16

FS2
DIN 7991 M6x16

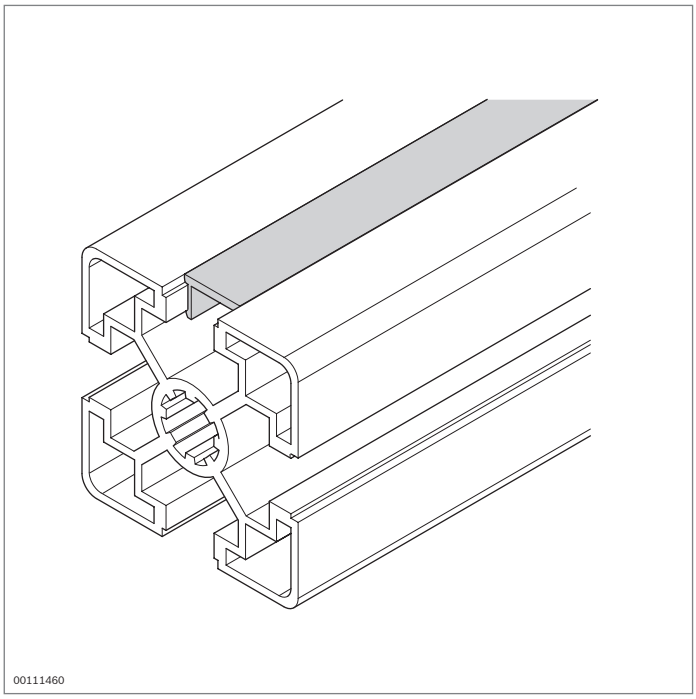

Cover profiles

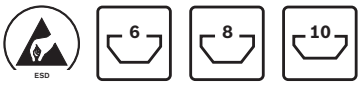

- For fixing cables in position
- To prevent dirt from entering the profile slot
- Attractive design
- Soft PVC cover profile for 6 mm slot is provided as a roller
- Flush with profile
- An ESD-conductive connection between the cover profile and the strut profile must be ensured by a suitable design solution, e.g. screw

Cover profile, 6 mm slot	Color	Material	ESD	L (mm)		No.
 00109365	Colorless, natural	Aluminum; anodized	⚠	2000	10	**3 842 523 254**
 00117777	Signal gray (RAL 7035)	Soft PVC		10000	1	**3 842 555 268**
Cover profile, 8 mm slot	**Color**	**Material**	**ESD**	**L** (mm)		**No.**
 00109366	Colorless, natural	Aluminum; anodized	⚠	2000	10	**3 842 523 256**
 00109367	Signal gray (RAL 7004)	PP		2000	10	**3 842 548 878**
	Black (RAL 9005)	PP	⚠	2000	10	**3 842 548 879**
	Light gray (RAL 7035)	PP		2000	10	**3 842 548 898**
	Red (RAL 3020)	PP		2000	10	**3 842 549 878**
	Yellow (RAL 1023)	PP		2000	10	**3 842 549 879**
	Green (RAL 6032)	PP		2000	10	**3 842 554 771**
	Blue (RAL 5010)	PP		2000	10	**3 842 549 880**
	Orange (RAL 2004)	PP		2000	10	**3 842 549 881**
	Colorless, transparent	PET		2000	10	**3 842 549 877**
Cover profile, 10 mm slot	**Color**	**Material**	**ESD**	**L** (mm)		**No.**
 00109368	Colorless, natural	Aluminum; anodized	⚠	2000	10	**3 842 523 258**
 19502	Signal gray (RAL 7004)	Hard PVC		2000	10	**3 842 548 876**
	Black (RAL 9005)	Hard PVC	⚠	2000	10	**3 842 548 877**
	Light gray (RAL 7035)	Hard PVC		2000	10	**3 842 518 367**
	Red (RAL 3020)	Hard PVC		2000	10	**3 842 518 368**
	Yellow (RAL 1023)	Hard PVC		2000	10	**3 842 518 369**
	Yellow (RAL 6032)	Hard PVC		2000	10	**3 842 549 888**
	Blue (RAL 5010)	Hard PVC		2000	10	**3 842 538 955**
	Orange (RAL 2004)	Hard PVC		2000	10	**3 842 538 957**
	Colorless, transparent	Hard PVC		2000	10	**3 842 191 182**

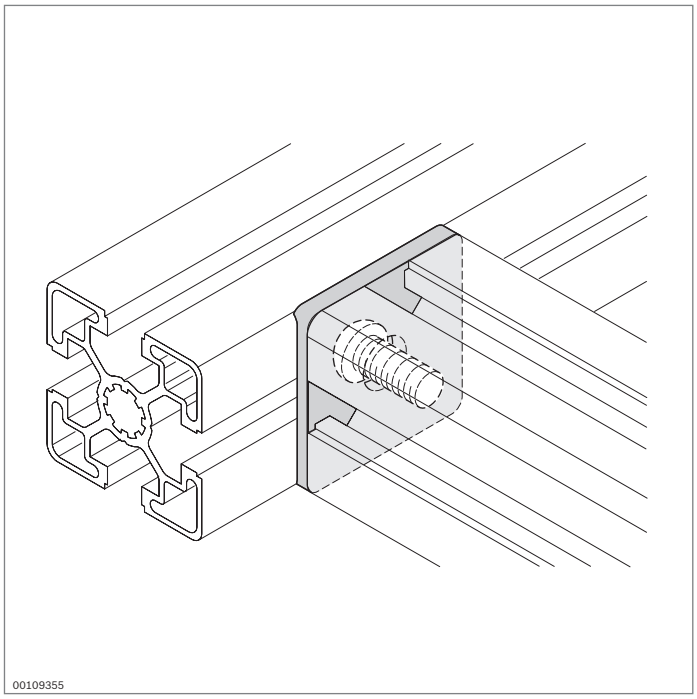

Radial compensation



- For avoiding gaps and sharp edges on T-connections between two profiles using a central bolt or quick connector (note spacing of hole from the end of the profile)
- Slot segments can be broken out to support panel elements in the slot
- Important note: The load carrying capacity of the profile connection is reduced when using radial compensation (see “Technical data”, page 18-20)!

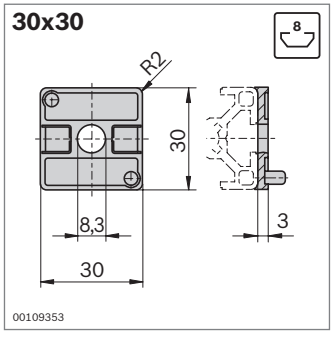

Radial compensation		Slot		No.
30x30		8	10	**3 842 551 026**
Material:	PA; signal gray RAL 7004			

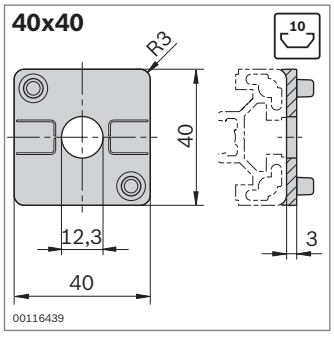

Radial compensation		Slot		No.
40x40		10	10	**3 842 551 028**
Material:	PA; signal gray RAL 7004			

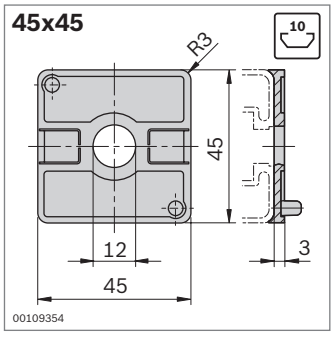

Radial compensation		Slot		No.
45x45		10	10	**3 842 551 030**
Material:	PA; signal gray RAL 7004			

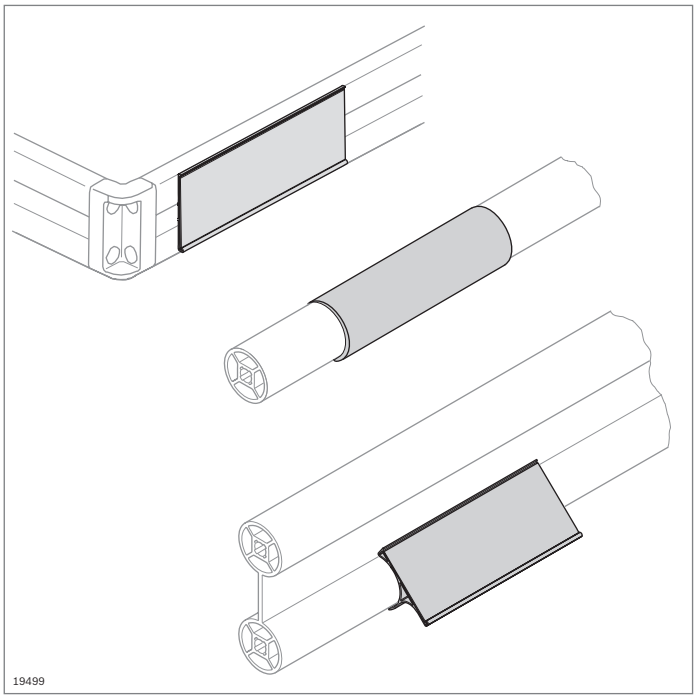

Labeling clips

- For labeling profiles and tubular cross ties

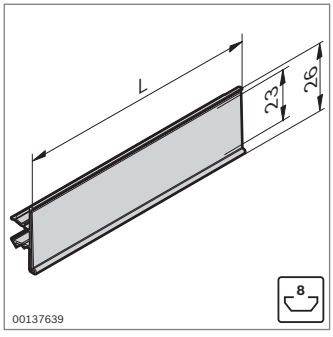

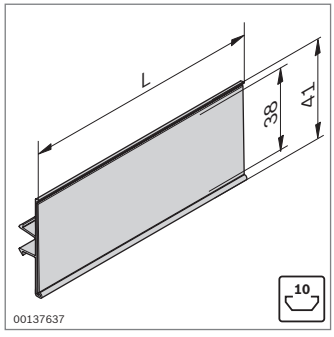

- Labeling clip for strut profiles with 8 mm and 10 mm slot

Labeling clip	Slot	L (mm)		No.
	8	2000	20	**3 842 537 113**
	8	102	20	**3 842 537 650**
	10	2000	20	**3 842 537 116**
	10	102	20	**3 842 537 651**

Material: Hard PVC, light gray (RAL 7035), transparent

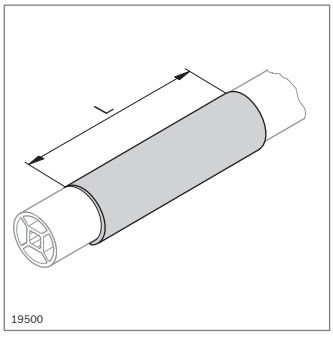

- Self-adhesive
- Labeling clip with rounded text surface for strut profiles D28; D28L; D28L, N10, and D28x55
- Label height 38 mm

Labeling clip	L (mm)		No.
For tubular cross ties	2000	20	**3 842 535 136**
	102	20	**3 842 538 093**

Material: Hard PVC, colorless, transparent

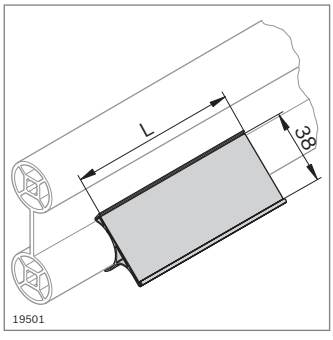

- Self-adhesive
- Labeling clip with flat text surface for strut profiles D28; D28L; D28L, N10, and D28x55

Labeling clip	L (mm)		No.
For tubular cross ties	2000	20	**3 842 537 119**
	102	20	**3 842 537 652**

Material: Hard PVC, light gray (RAL 7035), transparent

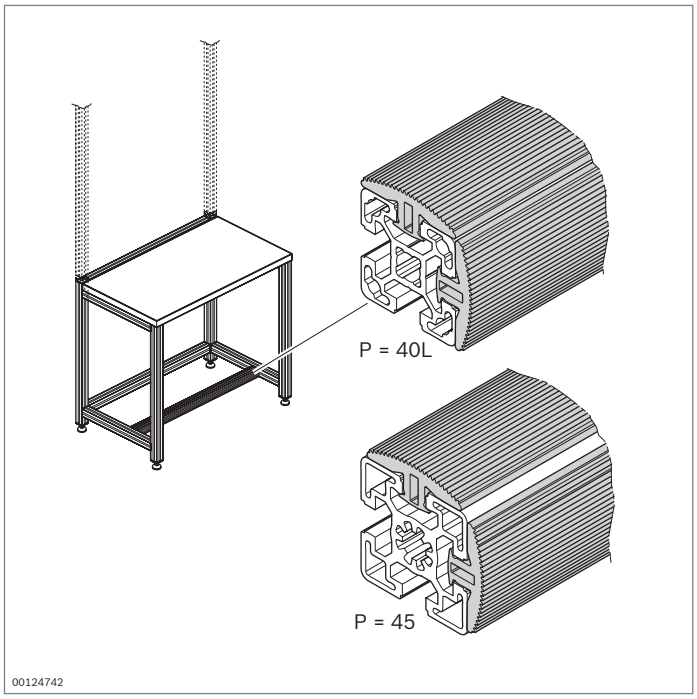

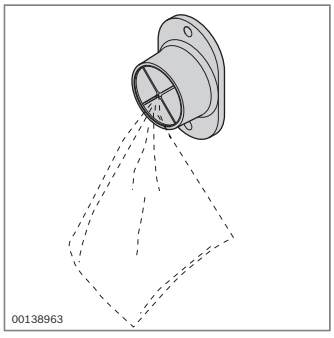

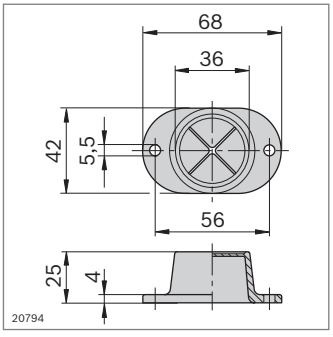

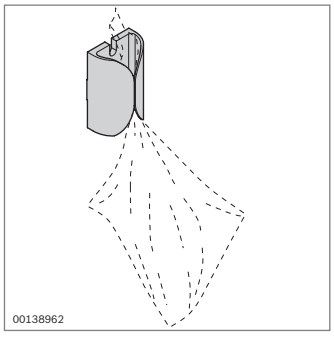

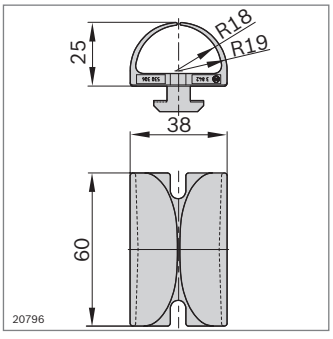

Rubber profile
Cloth holder

Rubber profile

- To avoid impact on hard edges, such as when setting down impact-sensitive products
- For use as footrest to clip in from top and front on the cross strut of the workstation
- Really simple and inexpensive
- Suitable for the construction of ESD workstations

Rubber profile	L (mm)	ESD		No.
	30 ... 2000		1	**3 842 994 979 / L**
	2000		10	**3 842 537 135**
Material:	EPDM; bleeder resistance R = 10^4 ... 10^9 Ω			

Screwed-on cloth holder

- For hanging cleaning cloths

Required accessories:

- T-nut, 10 mm slot, M5 (**3 842 530 283**) (p. 3-4)
- Screw DIN 7984 M5x12

Screwed-on cloth holder	No.
	1 845 719 000
Material: PE; black	

Cloth holder with clamp base

- With injection molded clamp base for direct assembly on strut profile with 10 mm slot
- Can also be used as a cable guide

Cloth holder with clamp base	No.
	3 842 530 306
Material: PA6, black	

Connection elements

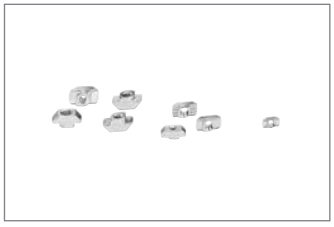

T-nut (p. 3-4)
Collar screw (p. 3-5)



Flange nut, T-bolt (p. 3-6)

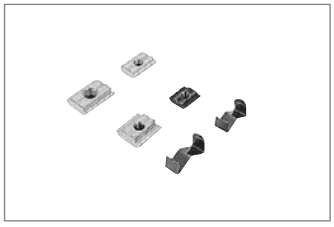

Sliding block (p. 3-7)

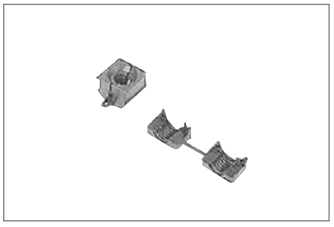

Expanding nut (p. 3-10)



Parallel connector (p. 3-11)



Tensioning connector (p. 3-12)

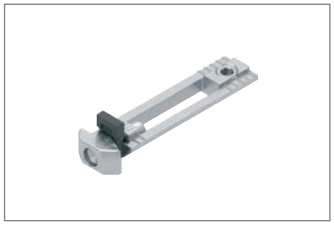

Slot connector (p. 3-13)

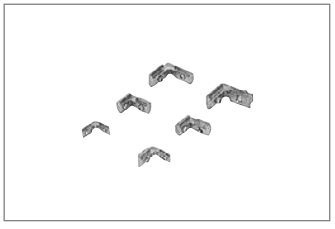

Inner bracket (p. 3-14)
Inner bracket R (p. 3-15)

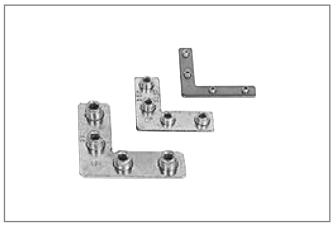

Miter bracket (p. 3-17)



Bracket (p. 3-18)

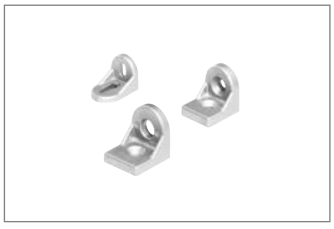

Bracket R (p. 3-30)



Steel bracket (p. 3-32)



Metal bracket, supporting bracket (p. 3-33)

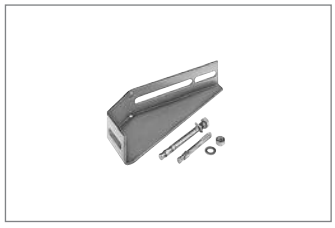

Foundation bracket (p. 3-34)



Holder (p. 3-35)



Supporting bracket (p. 3-37)

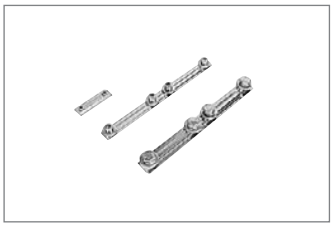

Profile connector (p. 3-39)



Central bolt (p. 3-41)

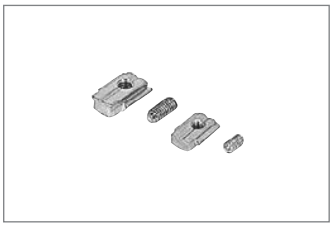

Anti-torsion element (p. 3-42)

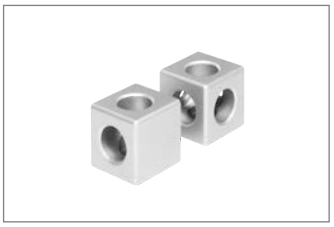

Cubic connector (p. 3-43)

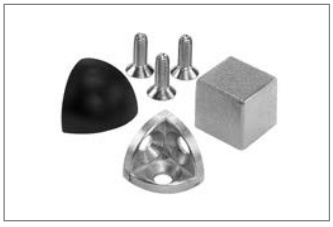

Corner bracket (p. 3-47)

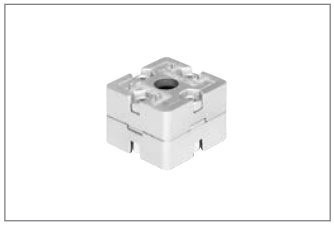

End connector (p. 3-49)

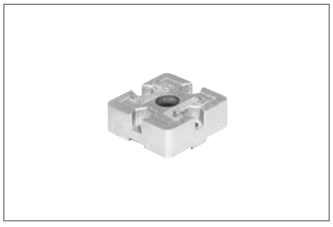

T-connector (p. 3-51)

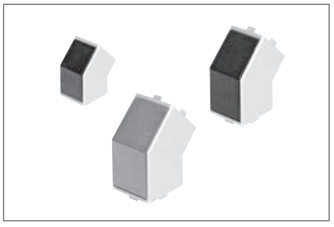

Connector 45° (p. 3-53)



Quick connector (p. 3-54)



Quick connector, bendable (p. 3-57)

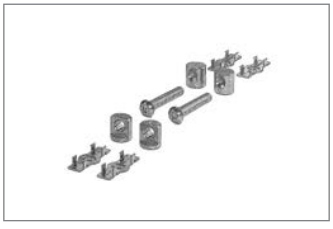

Longitudinal end connector (p. 3-59)

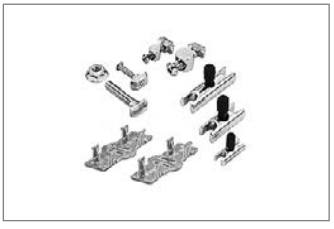

Bolt connector (p. 3-60)

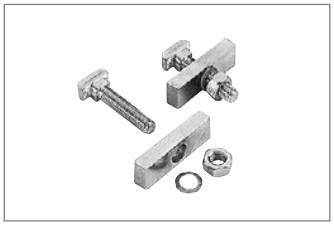

QV mounting kit (p. 3-62)

Connection elements, selection criteria

● recommended ◑ suitable ○ unsuitable

	Tensioning connector	Slot connector	Inner bracket	Bracket	Central bolt	T-connector	Quick connector	Bolt connector
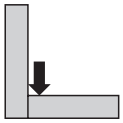 High feed force	●	●	○	●	●	●	●	●
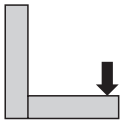 High moment	◑	◑	○	●	◑	◑	○	●
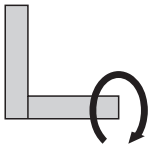 High torsional moment	●	●	○	◑	○	●	○	●
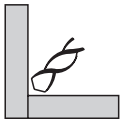 Minimal finishing	●	●	●	●	◑ M12 9,8	●	◑ D17	◑ D17
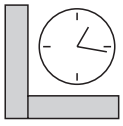 Minimal assembly	●	●	●	●	●	○	●	○
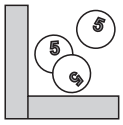 Low parts costs	◑	◑	◑	◑	●	○	◑	○
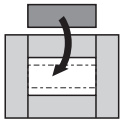 Subsequent mounting in closed frame	◑	◑	○	●	○	◑	○	●
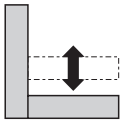 Adjustment possible	●	●	◑	●	○	●	●	●
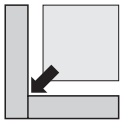 Mounting of panel elements	◑	◑	◑	◑	●	○	●	○
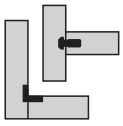 Internal connection (concealable)	●	●	●	○	●	◑	◑	●

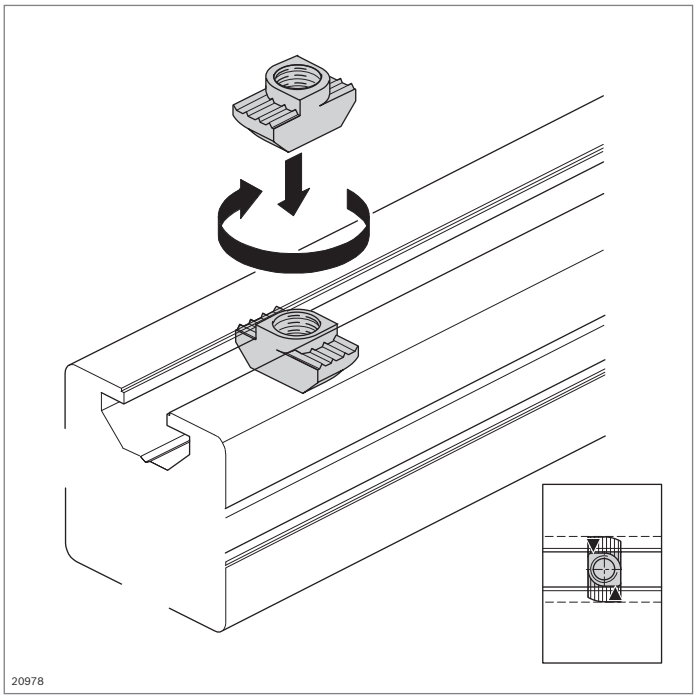

T-nut



- Standard element for a secure and conductive connection
- End stop for correct positioning in the profile slot
- Stainless steel T-nut, e.g. for outdoor or cleanroom applications
- Profile finishing: Not required

Technical data (p. 18-15)

Accessories:
Insulating cap (p. 3-5)

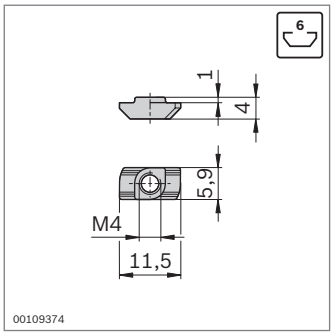

Slot	F_{max}
6	1700 N

T-nut, 6 mm slot	Slot	M	ESD		No.
Steel; galvanized	6	M4		100	**3 842 523 135**
Stainless steel	6	M4		100	**3 842 536 599**

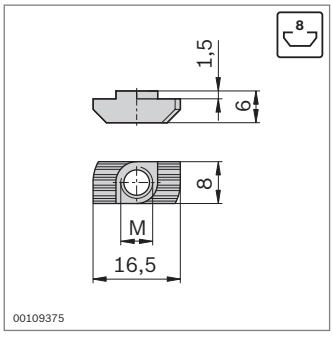

Slot	F_{max}
8 (M6)	4000 N

T-nut, 8 mm slot	Slot	M	ESD		No.
Steel; galvanized	8	M4		100	**3 842 501 751**
		M5*		100	**3 842 501 752**
		M6*		100	**3 842 501 753**
Stainless steel	8	M4		100	**3 842 536 600**
		M5		100	**3 842 536 601**
		M6		100	**3 842 536 602**

* Suitable for standard screws. **Attention:** T-nuts have driving torque for safe turning in the base of the slot.

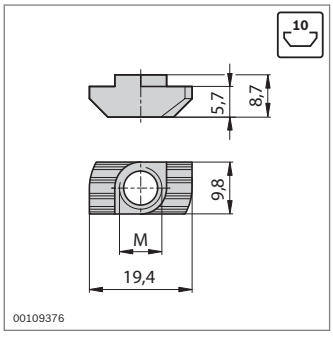

Slot	F_{max}
10 (M8)	6000 ... 18000 N[1)]

[1)] Depending on profile (p. 19-5)

T-nut, 10 mm slot	Slot	M	ESD		No.
Steel; galvanized	10	M4		100	**3 842 530 281**
		M5*		100	**3 842 530 283**
		M6*		100	**3 842 530 285**
		M8*		100	**3 842 530 287**
Stainless steel	10	M4		100	**3 842 536 606**
		M5		100	**3 842 536 605**
		M6		100	**3 842 536 604**
		M8		100	**3 842 536 603**

* Suitable for standard screws. **Attention:** T-nuts have driving torque for safe turning in the base of the slot.

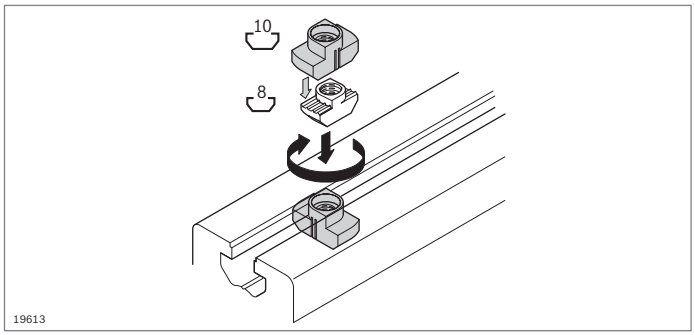

- Insulating cap for decoupling directly grounded components; for use with T-nuts for 8 mm slots in a 10 mm slot

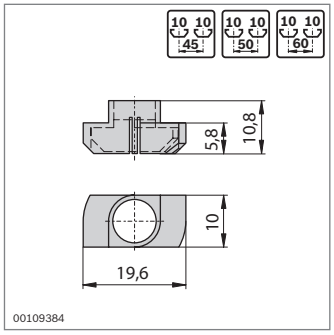

Insulating cap for T-nut, 8 mm slot	Slot		No.
	10	10	**3 842 524 012**

Material: PA; high-strength, black

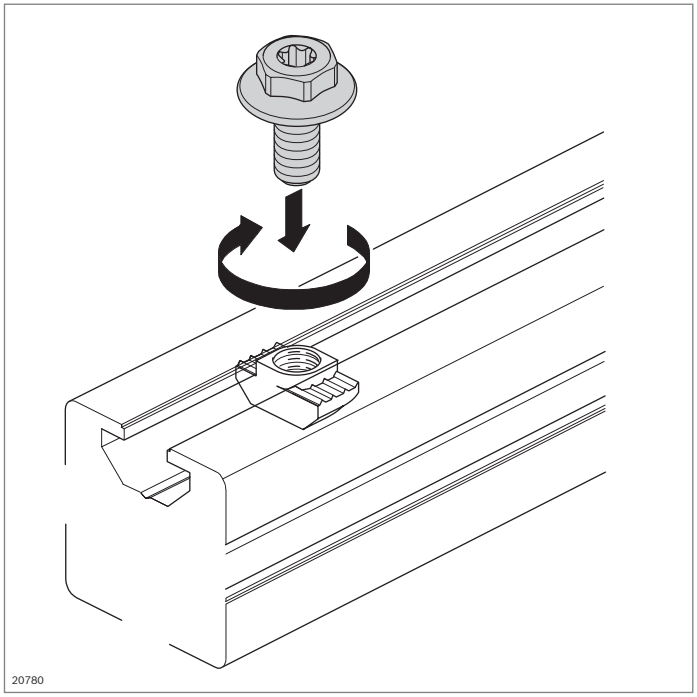

Collar screw

- Collar screw with multi-function head for tightening with ring/open-end wrench (WS 13) or Torx screwdriver (T40)
- Machine tightening possible
- Preferably to be used for fastening brackets
- Quick and simple assembly
- Excellent force transmission via the wide flange
- ESD-capable
- With Polyfleck to secure the T-nut

Tools:
Offset screwdriver (p. 14-5)

Accessories:
T-nut (p. 3-4)

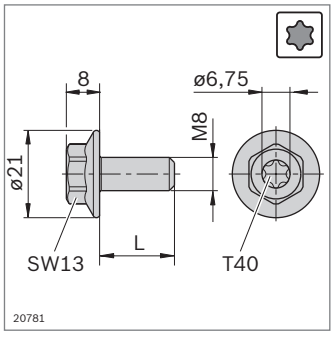

Collar screw	M	L (mm)	ESD		No.
M8x18-SW13-T40[1]	M8	18	ESD	100	**3 842 541 246**
M8x20-SW13-T40[2]	M8	20	ESD	100	**3 842 541 409**

[1] For 40/40 and 60/60 brackets

[2] For all other brackets for 10 mm slot

Material: Steel; galvanized

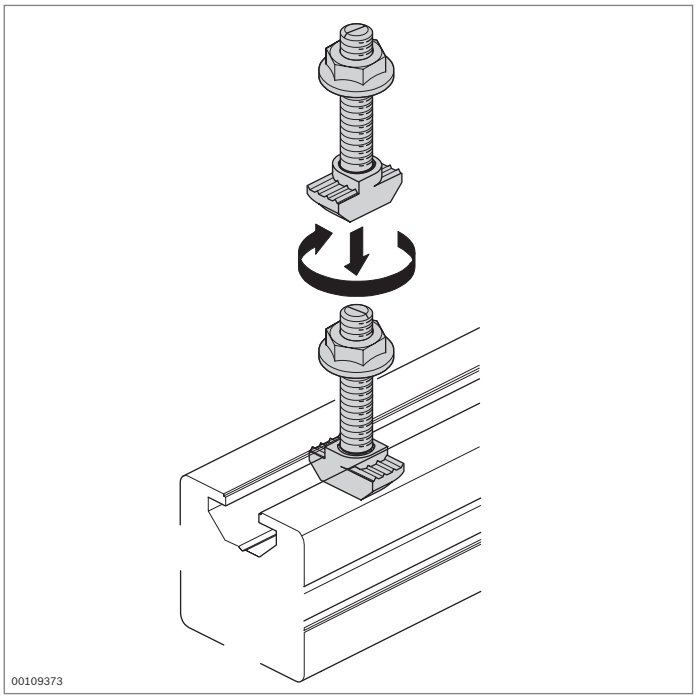

Flange nut
T-bolt

- Secure and conductive connection
- Notch at bolt end as marker for correct position recognition
- Profile finishing: Not required

Technical data (p. 18-15)

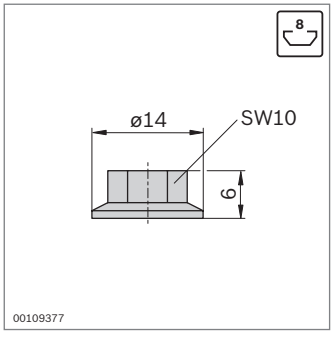

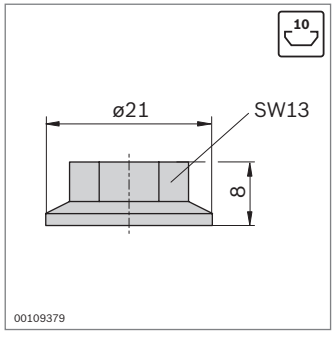

Flange nut	Slot	M	ESD		No.
	8	M6		100	**3 842 523 925**
	10	M8		100	**3 842 345 081**

Material: Steel; galvanized

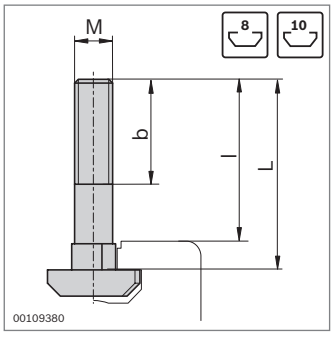

Slot	F_{max}
8	4000 N
10	6000 ... 18000 N[1)]

[1)] Depending on profile (p. 18-15)

T-bolt	Slot	MxL	b (mm)	l (mm)	ESD		No.
	8	M6x16	10	14		100	**3 842 523 920**
		M6x20	14	18		100	**3 842 523 921**
		M6x25	18	23		100	**3 842 523 922**
	10	M8x20	14	14		100	**3 842 528 715**
		M8x25	19	19		100	**3 842 528 718**
		M8x30	24	24		100	**3 842 528 721**
		M8x40	22	34		100	**3 842 528 724**
		M8x50	22	44		100	**3 842 528 727**
		M8x60	22	54		100	**3 842 528 730**

Material: Steel; galvanized

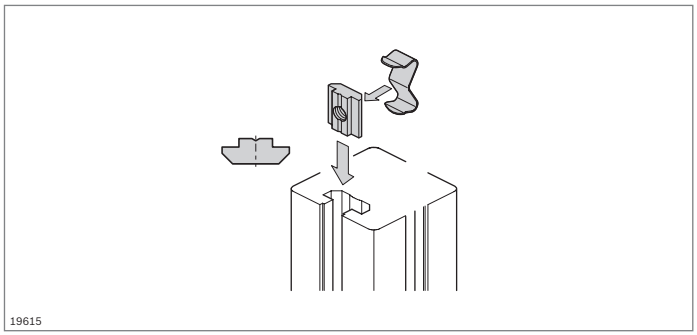

Sliding block, sliding block profile



- Sliding block for reliable absorption of high forces
- Sliding block profile for self-assembly of individual fastening elements
- Profile finishing: Not required
- The spring assists with the assembly and positioning of the sliding block and swivel-in sliding block (p. 3-8)

Technical data (p. 18-15)

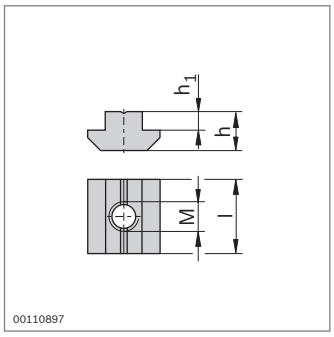

Slot	F_{max}
6 (M5)	3000 N
8 (M8)	6000 N
10 (M8)	8000 ... 24000 N[1)]

[1)] Depending on profile (p. 18-15)

Sliding block	Slot	M	h (mm)	h_1 (mm)	l (mm)	ESD		No.
Steel; galvanized	6	M4	4.0	1.0	12	✓	100	**3 842 542 692**
		M5	4.0	1.0	12	✓	100	**3 842 542 693**
	8	M4	6.0	2.0	16		100	**3 842 514 928**
		M5	6.0	2.0	16		100	**3 842 514 929**
		M6	6.0	2.0	16		100	**3 842 514 930**
		M8	6.0	2.0	16		100	**3 842 514 931**
	10	M5	10.5	5.0	20		100	**3 842 528 741**
		M6	10.5	5.0	20		100	**3 842 528 738**
		M8	10.5	5.0	20		100	**3 842 528 735**
Steel; stainless	6	M4	4.0	1.0	12	✓	100	**3 842 523 140**
		M5	4.0	1.0	12	✓	100	**3 842 523 142**
	8	M4	6.0	2.0	16	✓	100	**3 842 547 817**
		M5	6.0	2.0	16	✓	100	**3 842 547 816**
		M6	6.0	2.0	16	✓	100	**3 842 547 815**
		M8	6.0	2.0	16	✓	100	**3 842 547 814**
	10	M5	10.5	5.0	20	✓	100	**3 842 547 813**
		M6	10.5	5.0	20	✓	100	**3 842 547 812**
		M8	10.5	5.0	20	✓	100	**3 842 547 811**

Accessories: Spring (p. 3-9)

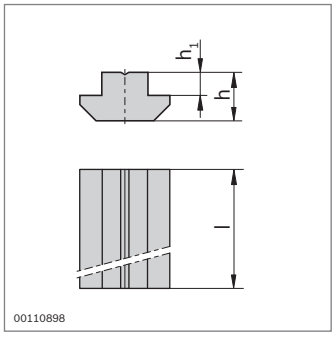

Sliding block profile	Slot	h (mm)	h_1 (mm)	l (mm)	No.
Steel; galvanized	6	4.0	1.0	1000	**3 842 542 694**
	8	6.0	2.0	1000	**3 842 510 078**
	10	10.5	5.0	1000	**3 842 528 744**
Steel; stainless	6	4.0	1.0	1000	**3 842 523 438**

Accessories: Spring (p. 3-9)

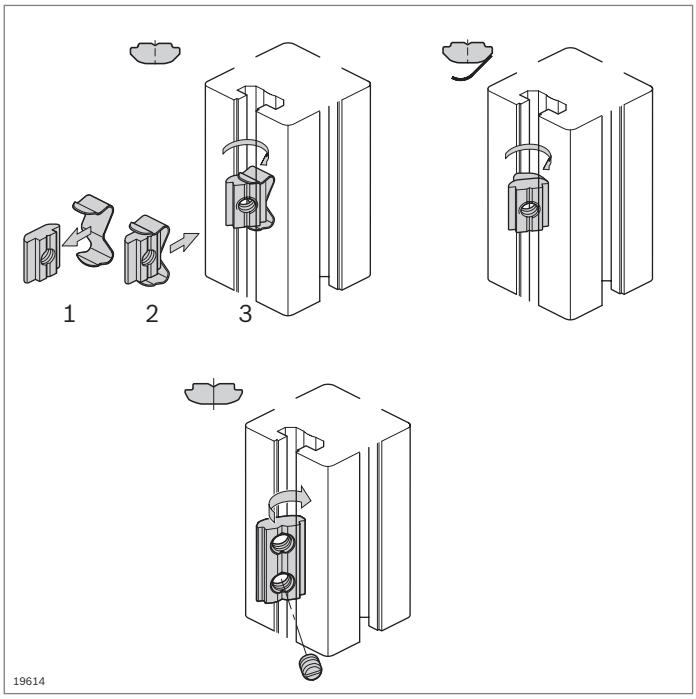

Swivel-in sliding block
Swivel-in sliding block profile
Spring

- Swivel-in sliding block profile for self-assembly of individual fastening elements
- The swivel-in sliding block can be inserted directly at the assembly point for easy assembly
- The swivel-in sliding block with spring can be inserted directly at the assembly point and fixed in position thanks to attached springs
- Swivel-in sliding block with headless setscrews for shake-proof fixing in all positions
- Profile finishing: Not required

Technical data (p. 18-15)

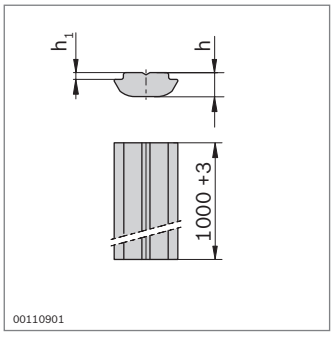

Slot	F_{max}
8 (M8)	2200 N
10 (M8)	8000 ... 18000 N[1)]

[1)] Depending on profile (p. 18-15)

Swivel-in sliding block profile	Slot	h (mm)	h_1 (mm)	l (mm)	No.
Steel; galvanized	8	4.8	1.0	1000	**3 842 529 327**
	10	5.3	1.5	1000	**3 842 529 325**

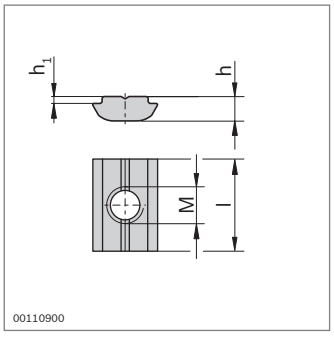

Swivel-in sliding block	Slot	M	h (mm)	h_1 (mm)	l (mm)	ESD		No.
Steel; galvanized	8	M5	4.8	1.0	16		100	**3 842 529 319**
		M6	4.8	1.0	16		100	**3 842 529 320**
		M8	4.8	1.0	16		100	**3 842 529 321**
	10	M6	5.3	1.5	20		100	**3 842 529 323**
		M8	5.3	1.5	20		100	**3 842 529 324**
Steel; stainless	6	M3	3.0	0.9	12	ESD	100	**3 842 547 826**
		M4	3.0	0.9	12	ESD	100	**3 842 536 669**
		M5	3.0	0.9	12	ESD	100	**3 842 547 825**
	8	M6	4.8	1.0	16	ESD	100	**3 842 530 321**
	10	M8	5.3	1.5	20	ESD	100	**3 842 530 316**

Accessories: spring (p. 3-9)

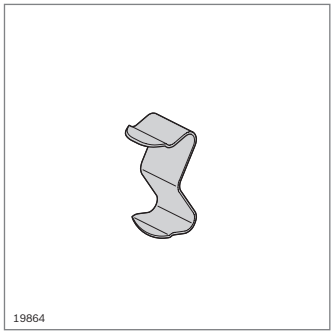

- The spring assists with the assembly and positioning of the sliding block and swivel-in sliding block

Spring	Slot		No.
Spring steel; stainless	6	100	**3 842 523 145**
	8	100	**3 842 516 685**
	10	100	**3 842 516 669**

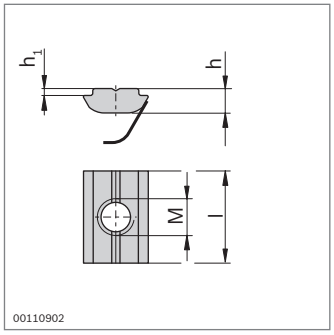

Slot	F_{max}
8 (M8)	2200 N
10 (M8)	8000 ... 18000 N[1)]

[1)] Depending on profile (p. 18-15)

Swivel-in sliding block with spring	Slot	M	h (mm)	h_1 (mm)	l (mm)	ESD		No.
Steel; galvanized	8	M4	4.8	1.0	16		100	**3 842 529 294**
		M5	4.8	1.0	16		100	**3 842 529 295**
		M6	4.8	1.0	16		100	**3 842 529 296**
		M8	4.8	1.0	16		100	**3 842 529 297**
	10	M4	5.3	1.5	20		100	**3 842 541 393**
		M5	5.3	1.5	20		100	**3 842 529 298**
		M6	5.3	1.5	20		100	**3 842 529 299**
		M8	5.3	1.5	20		100	**3 842 529 300**
Steel; stainless	8	M4	4.8	1.0	16		100	**3 842 547 824**
		M5	4.8	1.0	16		100	**3 842 547 823**
		M6	4.8	1.0	16		100	**3 842 547 822**
		M8	4.8	1.0	16		100	**3 842 547 821**
	10	M5	5.3	1.5	20		100	**3 842 547 808**
		M6	5.3	1.5	20		100	**3 842 547 807**
		M8	5.3	1.5	20		100	**3 842 547 806**

Material: Spring: Spring steel; stainless

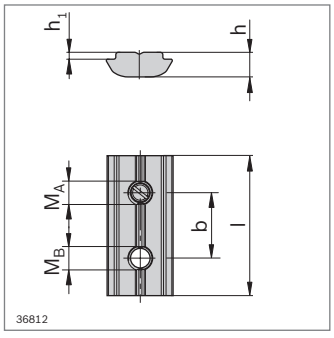

Swivel-in sliding block, with Headless setscrew (M_A)	Slot	M_A; M_B	b (mm)	h (mm)	h_1 (mm)	l (mm)		No.
Steel; stainless	6	M4; M4	8	3.0	0.9	15	100	**3 842 536 673**
Steel; galvanized	8	M5; M4	12	4.8	1.0	24	100	**3 842 557 259**
		M5; M5	12	4.8	1.0	24	100	**3 842 536 675**
		M5; M6	12	4.8	1.0	24	100	**3 842 557 260**
	10	M5; M5	14	5.3	1.5	30	100	**3 842 536 676**
		M5; M6	14	5.3	1.5	30	100	**3 842 557 261**
		M5; M8	14	5.3	1.5	30	100	**3 842 557 262**

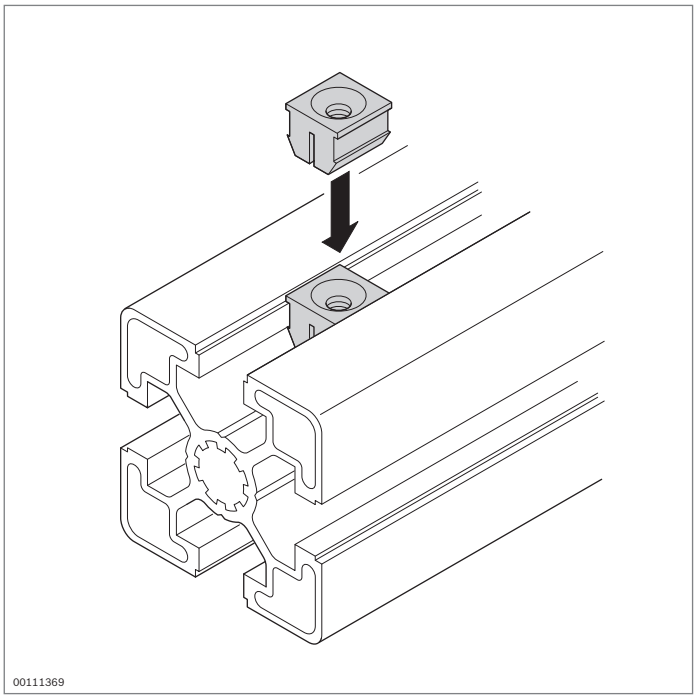

Expanding nut



- For attaching light accessories such as cable ties or rings
- Easy assembly by clipping into the profile slot
- Profile finishing: Not required

Required accessories:
Countersunk screw

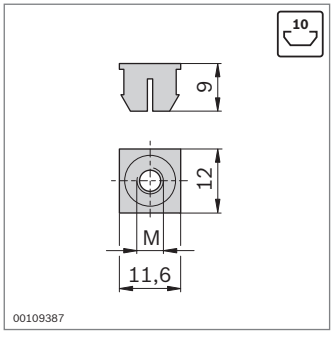

Expanding nut	Slot	M		No.
	10	M4	100	**3 842 554 774**
		M5	100	**3 842 554 776**
		M6	100	**3 842 554 778**

Material: PA; signal gray similar to RAL 7004

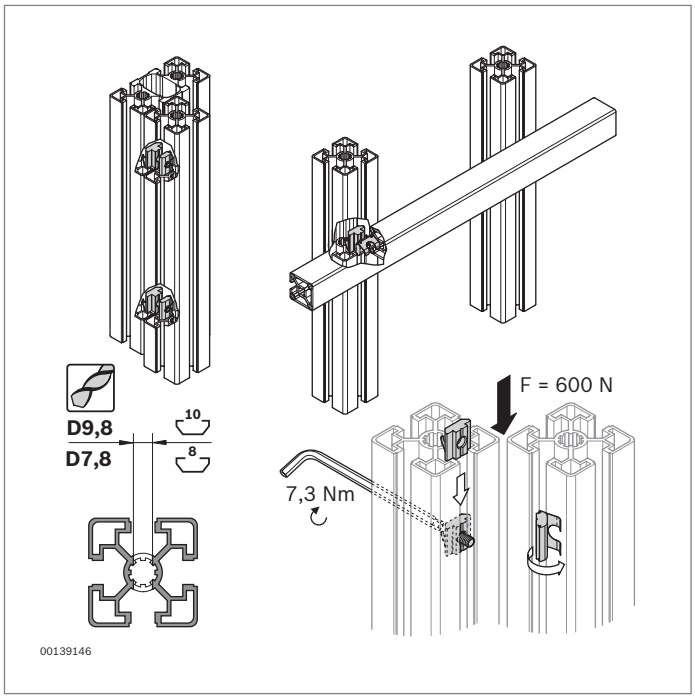

Parallel connector



- For a gap-free connection between two strut profiles, parallel to the axis or at any angle
- Parallel connector consisting of two sliding blocks with welded springs for simple assembly
- Attractive-looking interior connection, e.g. for material shelves
- Connection possible in any position
- Transferable displacement force per parallel connector: 600 N
- Profile finishing: Through-hole

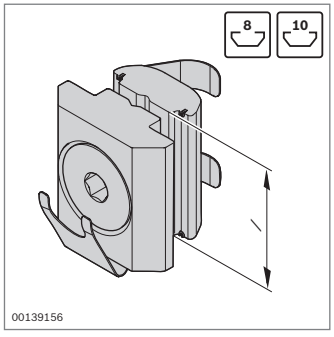

Slot	F_{max}
8	600 N
10	600 N

Parallel connector	Slot	l (mm)		No.
	8	16	10	**3 842 542 737**
	10	20	10	**3 842 542 736**

Material:	Sliding block: Steel; galvanized Spring: Spring steel; stainless
Scope of delivery:	Sliding block with spring, swivel-in sliding block with spring, countersunk screw M5

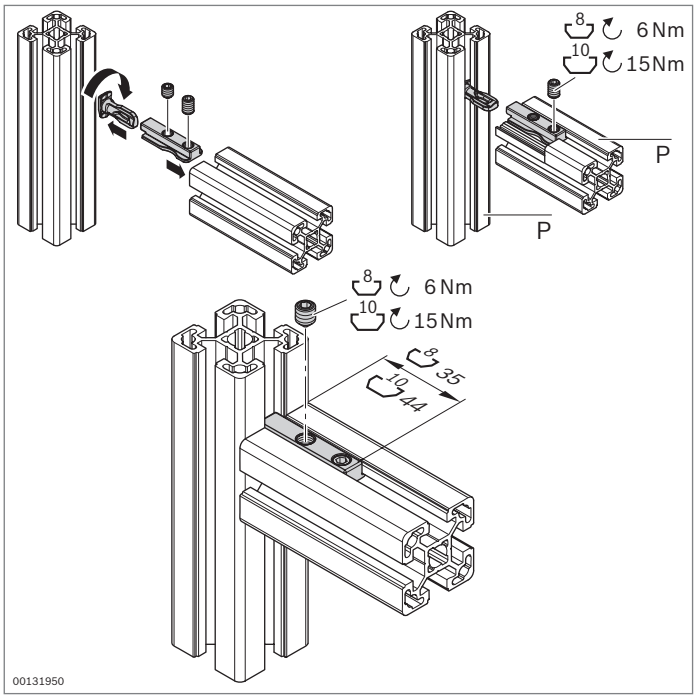

Tensioning connector

- Tensioning connector for fast assembly
- The connector can be moved within the slot
- Easily accessible screws
- Three slots are left free for mounting of panel elements
- Profile finishing: Not required

Technical data (p. 18-18)

P	F_{max}	M_{max}	M_{max}
30x...	1000 N	35 Nm	15 Nm
45x...L	3500 N	110 Nm	30 Nm
40x..., 45x..., 50x..., 90x...	3500 N	110 Nm	30 Nm
60x...	3500 N	195 Nm	60 Nm

Tensioning connector	Slot	P	ESD		No.
8	8	30x...		10	**3 842 538 489**
10L	10	45x...L 45x90SL 90x90SL		10	**3 842 538 491**
10	10	40x...L, 45x..., 50x...L, 60x..., 60x...L 80x...L 90x..., 90x...L, 45x90x90L		10	**3 842 538 490**

Material: Steel; galvanized

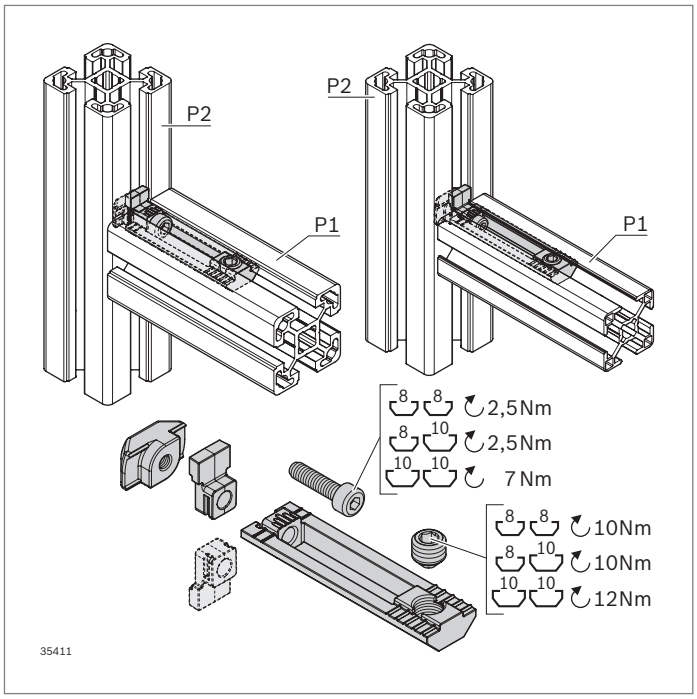

Slot connector

- Slot connector for fast assembly
- The connector can be moved within the slot
- Easily accessible screws
- Anti-torsion element can be removed if necessary, variable alignment (slot 10/10; 8/10)
- Headless setscrew, preassembled
- Profile finishing: Not required

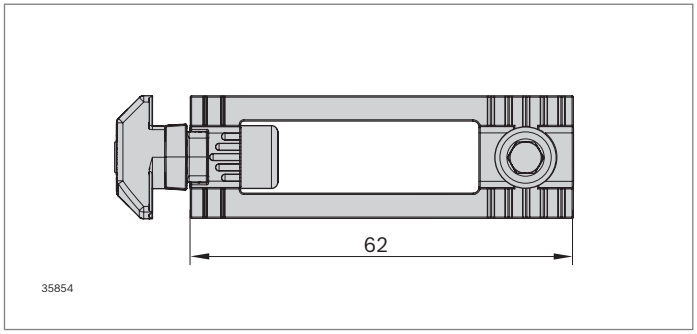

Slot connector	P1	P2	ESD		No.
8/8	8	8		10	**3 842 558 566**
8/10	8	10		10	**3 842 558 567**
10/10	10	10		10	**3 842 558 568**

Material: Slot connector: Steel; galvanized
Anti-torsion element: PA6

Slot	F_{max}	M_{max}	M_{max}
8 / 8	1000 N	35 Nm	15 Nm
8 / 10	1000 N	35 Nm	15 Nm
10 / 10	3000 N	110 Nm	30 Nm

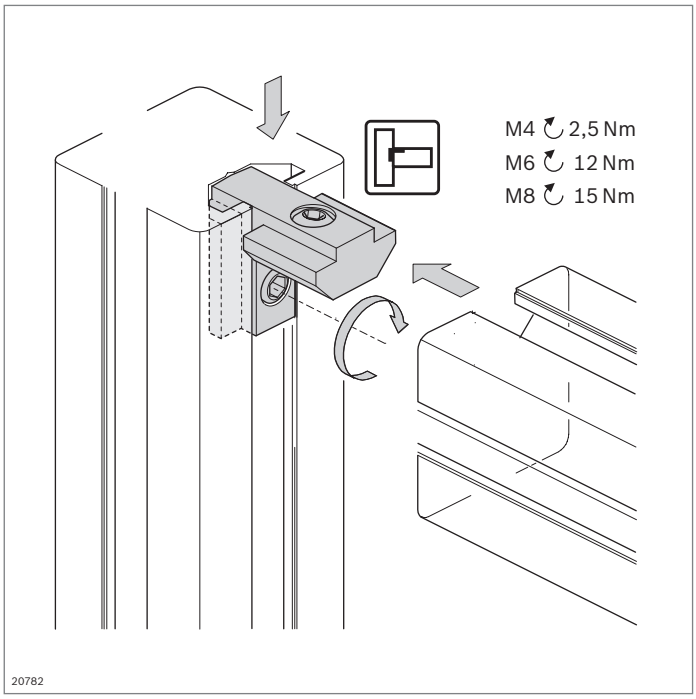

Inner bracket

- For elegant, easy-to-assemble profile connections
- Especially suitable for constructing door frames, protective grilles, or partition walls
- The inner bracket, 6 mm slot, can also be used as an inner bracket R, 6 mm slot
- Profile finishing: Not required

Technical data (p. 18-18)

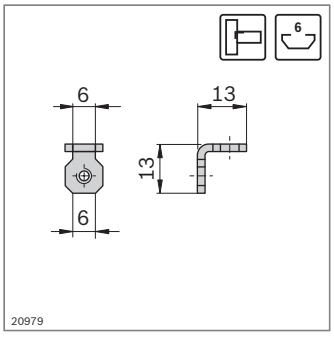

FS1

DIN 915
M4x6

Inner bracket	Slot	ESD		No.	FS
	6 / 6		10	**3 842 535 574**	2xFS1

Material: Sheet steel; galvanized
Fastening material: Steel; galvanized
Scope of delivery: Incl. fastening material (FS)

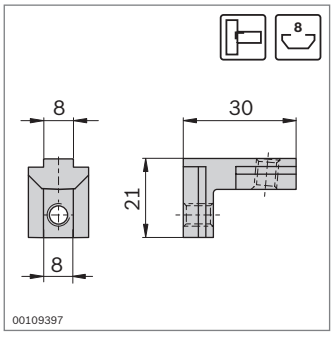

Slot	F_{max}	M_{max}
8 / 8	2200 N	50 Nm

FS2

DIN 913
M6x8

Inner bracket	Slot	ESD		No.	FS
	8 / 8		10	**3 842 535 578**	2xFS2

Material: Cast steel; galvanized
Fastening material: Steel; galvanized
Scope of delivery: Incl. fastening material (FS)

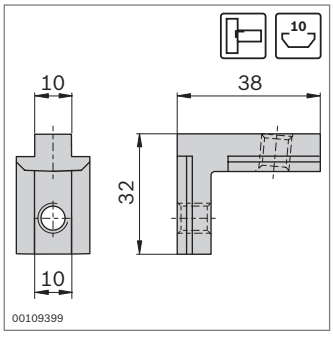

Slot	F_{max}	M_{max}
10 / 10	2800 N	100 Nm

FS3

DIN 913
M8x12

Inner bracket	Slot	ESD		No.	FS
	10 / 10		10	**3 842 535 572**	2xFS3

Material: Cast steel; galvanized
Fastening material: Steel; galvanized
Scope of delivery: Incl. fastening material (FS)

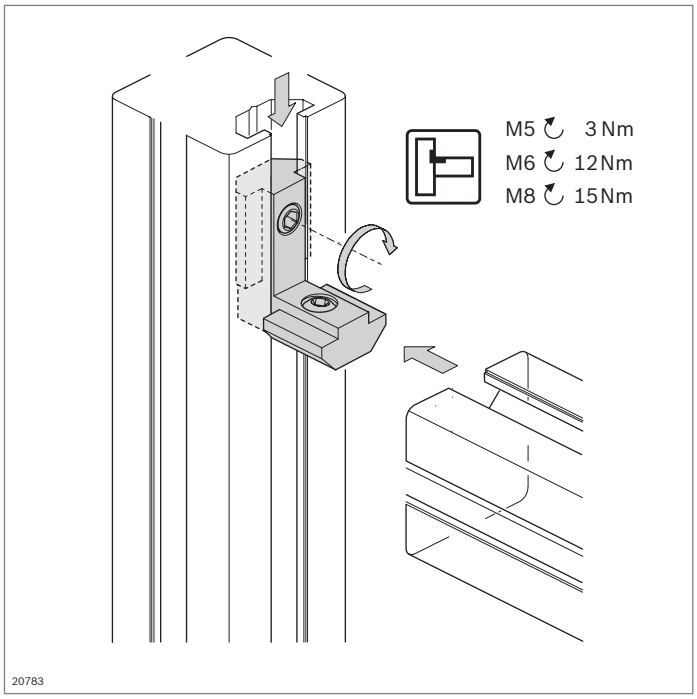

Inner bracket R

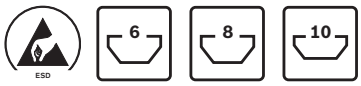

- For elegant, easy-to-assemble profile connections
- Especially suitable for constructing door frames, protective grilles, or partition walls
- Profile finishing: Not required

Technical data (p. 18-18)

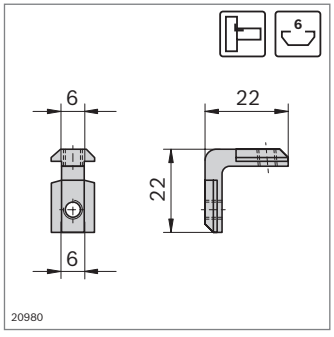

Slot	F_{max}	M_{max}
6 / 6	600 N	10 Nm

FS1
DIN 913 M5x5

Inner bracket R	Slot	ESD		No.	FS
	6 / 6		10	**3 842 535 575**	2xFS1
Material:	Cast steel; galvanized Fastening material: Steel; galvanized				
Scope of delivery:	Incl. fastening material (FS)				

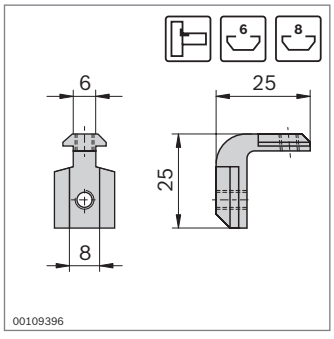

Slot	F_{max}	M_{max}
6 / 8	600 N	10 Nm

FS1
DIN 913 M5x5

Inner bracket R	Slot	ESD		No.	FS
	6 / 8		10	**3 842 535 573**	2xFS1
Material:	Cast steel; galvanized Fastening material: Steel; galvanized				
Scope of delivery:	Incl. fastening material (FS)				

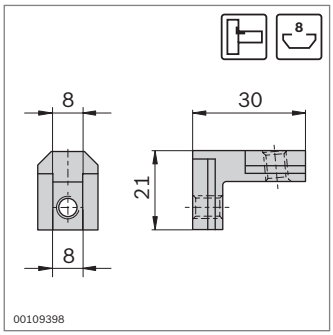

Slot	F_{max}	M_{max}
8 / 8	2500 N	50 Nm

FS2
DIN 913
M6x8

Inner bracket R	Slot	ESD		No.	FS
	8 / 8		10	**3 842 535 577**	2xFS2

Material: Cast steel; galvanized
Fastening material: Steel; galvanized
Scope of delivery: Incl. fastening material (FS)

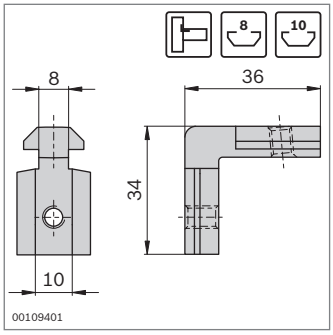

Slot	F_{max}	M_{max}
8 / 10	2500 N	50 Nm

FS2
DIN 913
M6x8

FS3
DIN 913
M6x12

Inner bracket R	Slot	ESD		No.	FS
	8 / 10		10	**3 842 535 576**	FS2, FS3

Material: Cast steel; galvanized
Fastening material: Steel; galvanized
Scope of delivery: Incl. fastening material (FS)

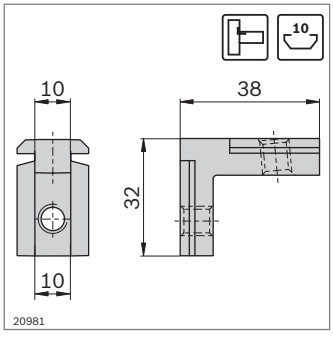

Slot	F_{max}	M_{max}
10 / 10	3000 N	100 Nm

FS4
DIN 913
M8x12

Inner bracket R	Slot	ESD		No.	FS
	10 / 10		10	**3 842 535 571**	2xFS4

Material: Cast steel; galvanized
Fastening material: Steel; galvanized
Scope of delivery: Incl. fastening material (FS)

Miter bracket

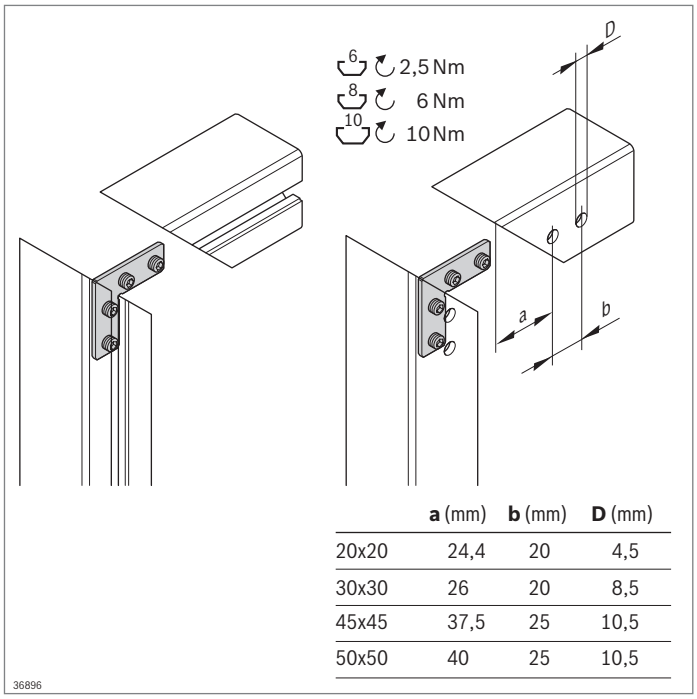

	a (mm)	**b** (mm)	**D** (mm)
20x20	24,4	20	4,5
30x30	26	20	8,5
45x45	37,5	25	10,5
50x50	40	25	10,5

36896

- For right-angled connections of miter-cut profiles
- Profile finishing with open profile slots: Not required
- Profile finishing with closed profile slots: Through-holes for screwdriver

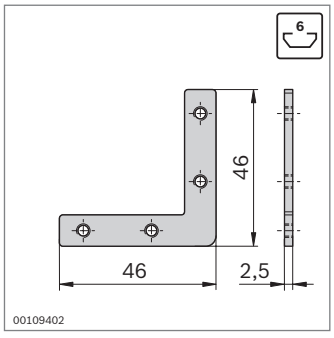

00109402

FS1

DIN EN ISO 4027 M4x5

Miter bracket	Slot	ESD		No.	FS
	6		20	**3 842 535 626**	4xFS1
Material:	Steel; stainless Fastening material: Steel; galvanized				
Scope of delivery:	Incl. fastening material (FS)				

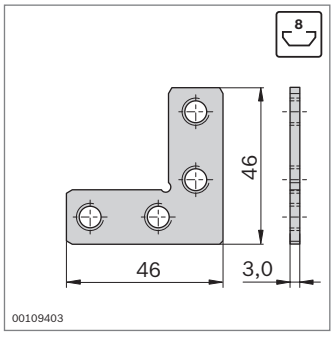

00109403

FS2

DIN EN ISO 4026 M8x8

Miter bracket	Slot	ESD		No.	FS
	8		20	**3 842 535 627**	4xFS2
Material:	Steel; galvanized Fastening material: Steel; galvanized				
Scope of delivery:	Incl. fastening material (FS)				

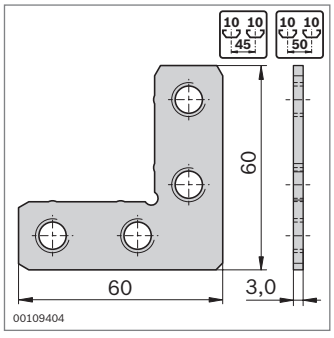

00109404

FS3

DIN EN ISO 4026 M10x10

Miter bracket	Slot	ESD		No.	FS
	10		20	**3 842 535 625**	4xFS3
Material:	Steel; galvanized Fastening material: Steel; galvanized				
Scope of delivery:	Incl. fastening material (FS)				

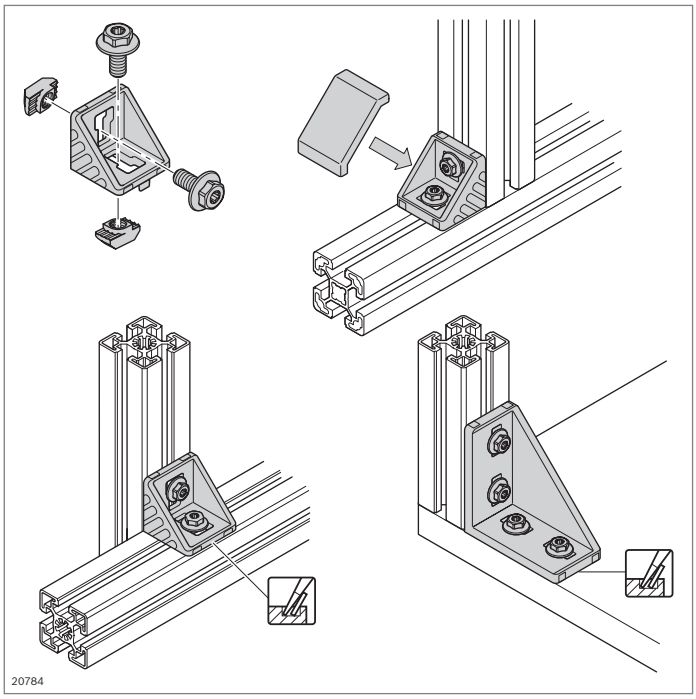

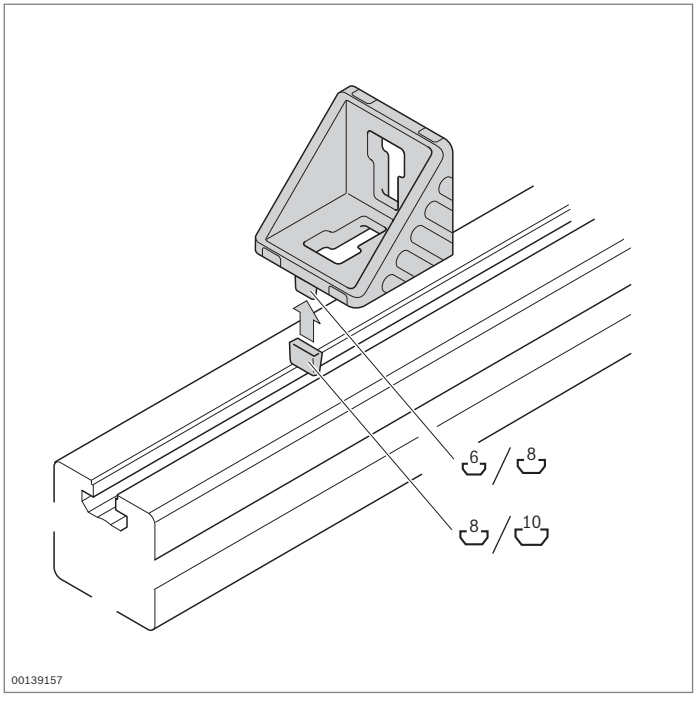

Bracket



designLINE

- Brackets with centering lugs for rapid, precise assembly with protection against turning
- Centering lugs can be easily broken off for assembly on plates or at right angles to the slot
- *designLINE* version with special silver paint (RAL 9006) for an attractive, high-quality design
- Intermediate element for positioning brackets in the next largest slot
- Sliding block offset for off-center positioning of the 45/45 bracket
- For preventing dry running.
  available in signal gray (RAL 7004) and
  black ESD (RAL 9005)
- Profile finishing: Not required

Technical data (p. 18-19)

Notice: The collar screws enable the brackets to be assembled really quickly and easily (p. 3-5)

20x20



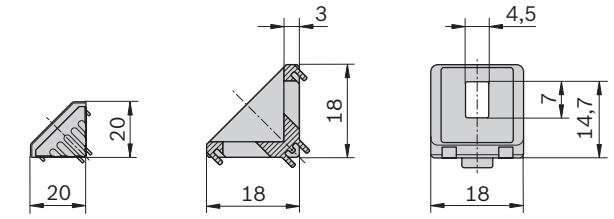

36866

20x20	Slot	ESD		No.	FS
Set (standard)	6 / 6		1	**3 842 523 511**	2xFS1
designLINE set	6 / 6		1	**3 842 551 596**	2xFS1
Bracket (standard)	6		100	**3 842 523 508**	
Cover cap, signal gray			100	**3 842 548 842**	
Cover cap, black			20	**3 842 548 843**	
Intermediate element for 8 mm slot	6 / 8		100	**3 842 523 516**	

Material:	Bracket: Diecast aluminum, vibratory ground *designLINE* bracket: painted (RAL 9006) Intermediate element: PA; black Cover cap: PP Fastening material: Steel; galvanized
Scope of delivery:	Set incl. fastening material (FS)

Type	F_{max}	M_{max}	M_{max}	M_{max}
20x20	700 N	6 Nm	25 Nm	–

FS1

DIN 7984
M4x8

20x40

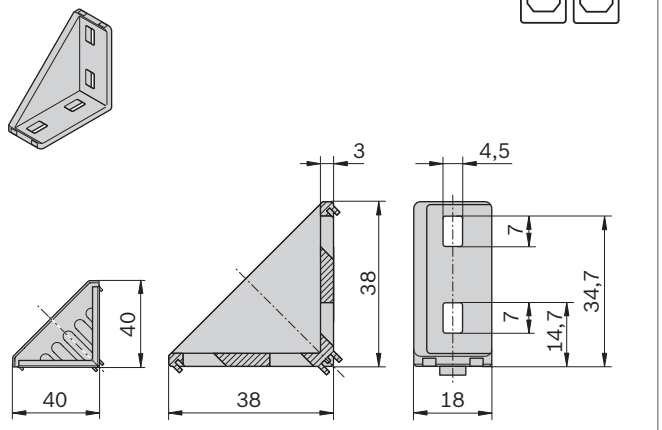

36867

20x40	Slot	ESD		No.	FS
Set (standard)	6 / 6		1	**3 842 523 520**	4xFS1
designLINE set	6 / 6		1	**3 842 551 597**	4xFS1
Bracket (standard)	6		20	**3 842 523 517**	
Cover cap, signal gray			20	**3 842 548 844**	
Cover cap, black			20	**3 842 548 845**	
Intermediate element for 8 mm slot	6 / 8		100	**3 842 523 516**	

Material:	Bracket: Diecast aluminum, vibratory ground *designLINE* bracket: painted (RAL 9006) Intermediate element: PA; black Cover cap: PP Fastening material: Steel; galvanized
Scope of delivery:	Set incl. fastening material (FS)

Type	F_{max}	M_{max}	M_{max}	M_{max}
20x40	1400 N	15 Nm	50 Nm	8 Nm

FS1

DIN 7984
M4x8

20x28



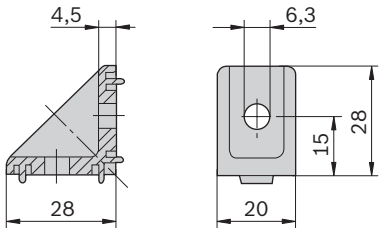

00125983

20x28	Slot	ESD		No.	FS
Set (standard)	8 / 8		1	**3 842 502 137**	2xFS1
Bracket (standard)	8		100	**3 842 501 587**	

Material: Diecast zinc
Fastening material: Steel; galvanized

Scope of delivery: Set incl. fastening material (FS)

FS1

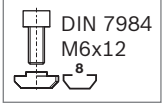

30x30

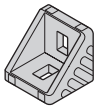

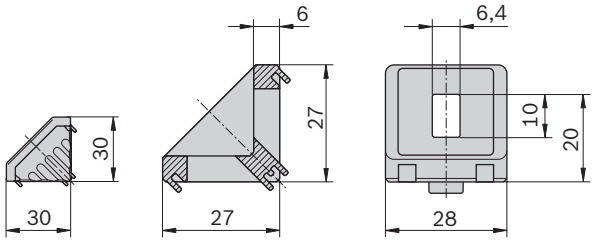

36868

30x30	Slot	ESD		No.	FS
Set (standard)	8 / 8		1	**3 842 523 528**	2xFS2
	8 / 10		1	**3 842 523 530**	1xFS2, 2xFS3, 1xFS4
	10 / 10		1	**3 842 523 532**	4xFS3, 2xFS4
designLINE set	8 / 8		1	**3 842 551 598**	2xFS2
	8 / 10		1	**3 842 551 600**	1xFS2, 2xFS3, 1xFS4
	10 / 10		1	**3 842 551 599**	4xFS3, 2xFS4
Bracket (standard)	8		100	**3 842 523 525**	
Cover cap, signal gray			100	**3 842 548 846**	
Cover cap, black			20	**3 842 548 847**	
Intermediate element for 10 mm slot	8 / 10		100	**3 842 523 537**	

Material: Bracket: Diecast aluminum, vibratory ground
designLINE bracket: painted (RAL 9006)
Intermediate element: PA; black
Cover cap: PP
Fastening material: Steel; galvanized

Scope of delivery: Set incl. fastening material (FS)

Type	F_{max}	M_{max}	M_{max}	M_{max}
30x30	1250 N	25 Nm	75 Nm	–

FS2

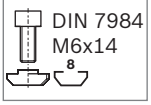

FS3

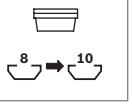

FS4

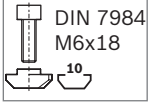

30x60

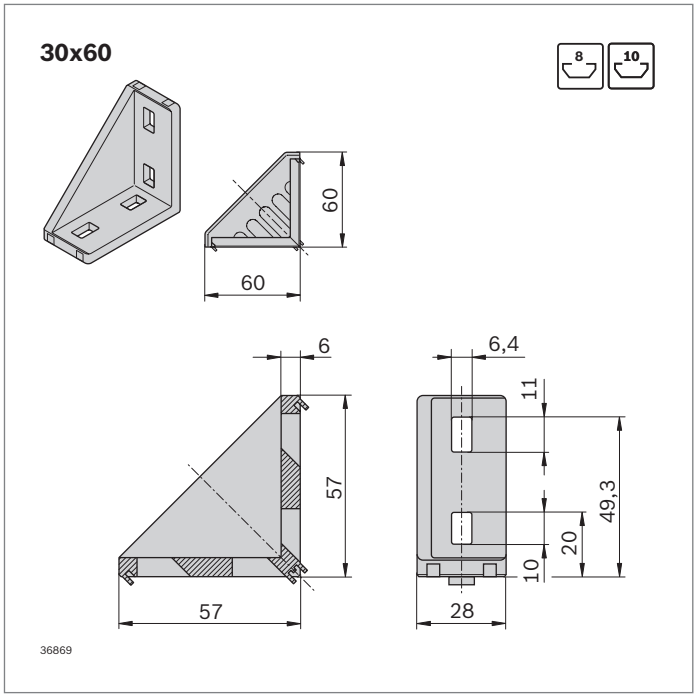

30x60	Slot	ESD		No.	FS
Set (standard)	8 / 8		1	**3 842 523 541**	4xFS2
designLINE set	8 / 8		1	**3 842 551 601**	4xFS2
Bracket (standard)	8		20	**3 842 523 538**	
Cover cap, signal gray			20	**3 842 548 848**	
Cover cap, black			20	**3 842 548 849**	
Intermediate element for 10 mm slot	8 / 10		100	**3 842 523 537**	

Material: Bracket: Diecast aluminum, vibratory ground
designLINE bracket: painted (RAL 9006)
Intermediate element: PA; black
Cover cap: PP
Fastening material: Steel; galvanized

Scope of delivery: Set incl. fastening material (FS)

Type	F_{max}	M_{max}	M_{max}	M_{max}
30x60	2500 N	100 Nm	170 Nm	25 Nm

FS2

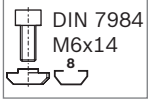

30x120

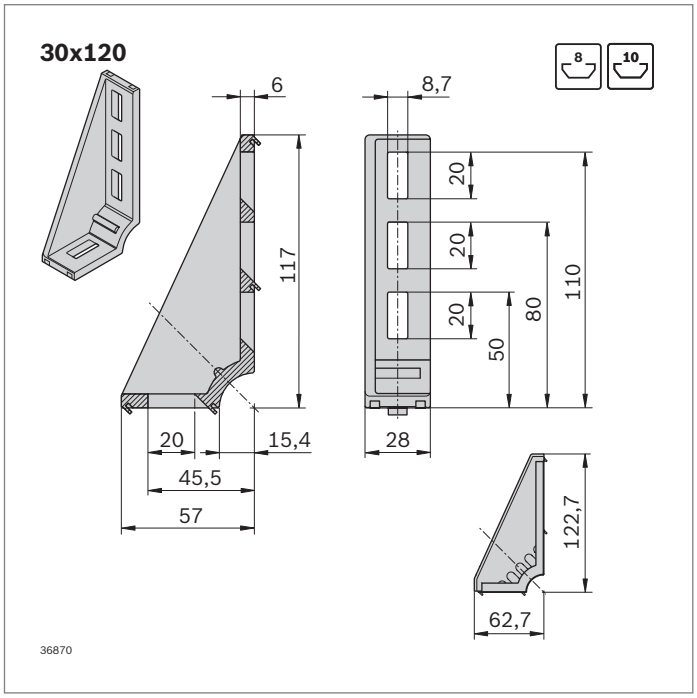

30x120	Slot	ESD		No.	FS
designLINE set	8 / 8		1	**3 842 551 602**	2xFS6
Bracket (standard)	8		20	**3 842 523 587**	
Cover cap, signal gray			20	**3 842 548 850**	
Cover cap, black			20	**3 842 548 851**	
Intermediate element for 10 mm slot	8 / 10		100	**3 842 523 537**	

Material: Bracket: Diecast aluminum, vibratory ground
designLINE bracket: painted (RAL 9006)
Intermediate element: PA; black
Cover cap: PP
Fastening material: Steel; galvanized

Scope of delivery: Set incl. fastening material (FS)

Type	F_{max}	M_{max}	M_{max}
30x120	3750 N	100 Nm	47 Nm

FS6

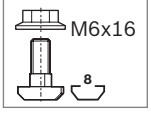

60x60

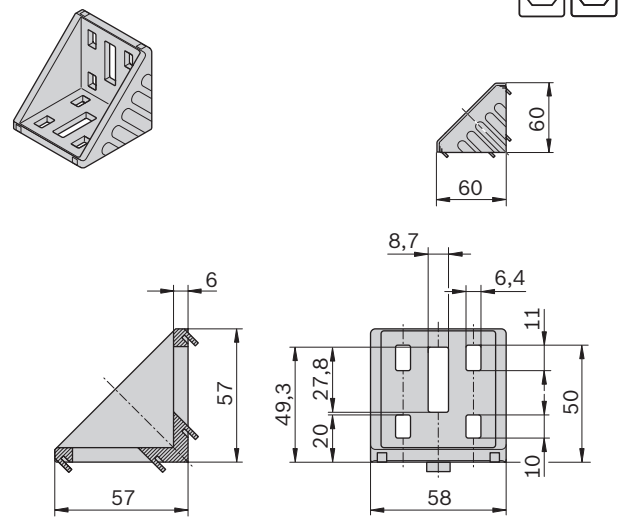

60x60	Slot	ESD		No.	FS
Set (standard)	8 / 8		1	**3 842 523 549**	8xFS2
	8 / 10		1	**3 842 523 551**	4xFS2, 1xFS5
	10 / 10		1	**3 842 523 553**	2xFS5
designLINE set	8 / 8		1	**3 842 551 609**	8xFS2
	8 / 10		1	**3 842 551 610**	4xFS2, 1xFS5
	10 / 10		1	**3 842 551 611**	2xFS5
Bracket (standard)	8		20	**3 842 523 546**	
Cover cap, signal gray			20	**3 842 548 852**	
Cover cap, black			20	**3 842 548 853**	
Intermediate element for 10 mm slot	10		100	**3 842 523 537**	

Material: Bracket: Diecast aluminum, vibratory ground
designLINE bracket: painted (RAL 9006)
Intermediate element: PA; black
Cover cap: PP
Fastening material: Steel; galvanized

Scope of delivery: Set incl. fastening material (FS)

Type	Slot	Fmax	Mmax	Mmax	Mmax
60x60	8	5000 N	320 Nm	370 Nm	110 Nm
	10	3000 N	125 Nm	150 Nm	–

FS2

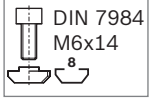

FS5

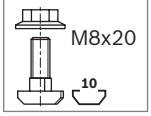

40x40

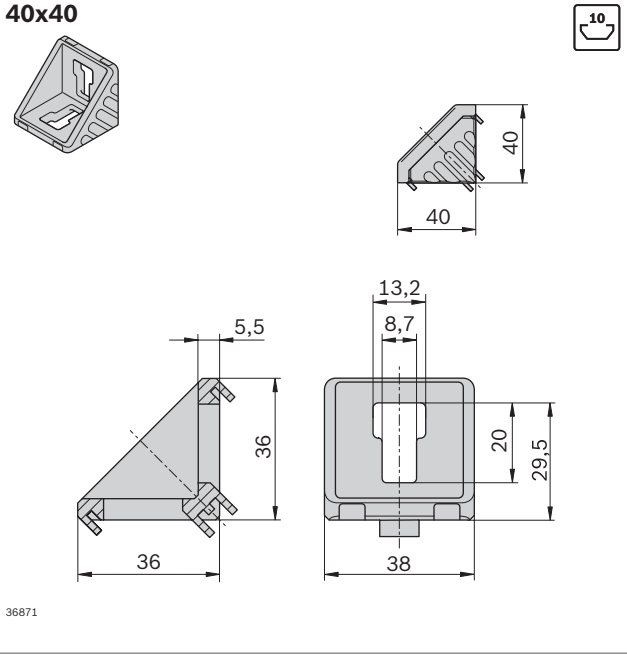

40x40	Slot	ESD		No.	FS
Set (standard)	10 / 10		1	**3 842 529 383**	2xFS5
designLINE set	10 / 10		1	**3 842 551 603**	2xFS5
Bracket (standard)	10		100	**3 842 528 967**	
Cover cap, signal gray			100	**3 842 548 854**	
Cover cap, black			20	**3 842 548 855**	

Material: Bracket: Diecast aluminum, vibratory ground
designLINE bracket: painted (RAL 9006)
Cover cap: PP
Fastening material: Steel; galvanized

Scope of delivery: Set incl. fastening material (FS)

Type	Fmax	Mmax	Mmax	Mmax
40x40	3000 N	55 Nm	145 Nm	35 Nm

FS5

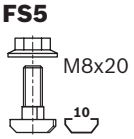

40x80

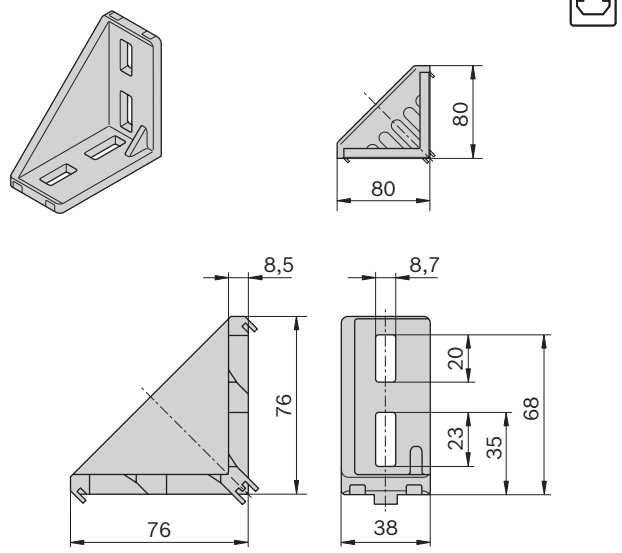

40x80	Slot	ESD		No.	FS
Set (standard)	10 / 10		1	**3 842 529 386**	4xFS7
designLINE set	10 / 10		1	**3 842 551 604**	4xFS7
Bracket (standard)	10		20	**3 842 529 005**	
Cover cap, signal gray			20	**3 842 548 856**	
Cover cap, black			20	**3 842 548 857**	

Material: Bracket: Diecast aluminum, vibratory ground
designLINE bracket: painted (RAL 9006)
Cover cap: PP
Fastening material: Steel; galvanized

Scope of delivery: Set incl. fastening material (FS)

Type	Fmax	Mmax	Mmax	Mmax
40x80	6000 N	180 Nm	400 Nm	60 Nm

FS7

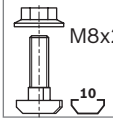

40x160

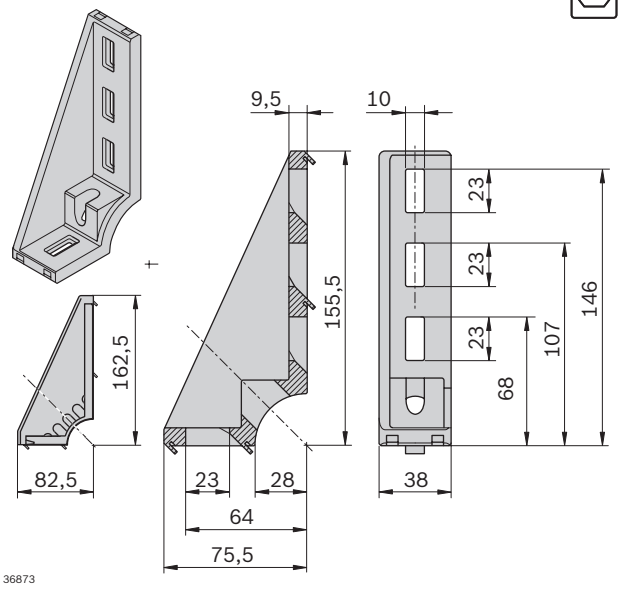

40x160	Slot	ESD		No.	FS
designLINE set	10 / 10		1	**3 842 551 605**	2x FS7
Bracket (standard)	10		20	**3 842 529 006**	
Cover cap, signal gray			20	**3 842 548 858**	
Cover cap, black			20	**3 842 548 859**	

Material: Bracket: Diecast aluminum, vibratory ground
designLINE bracket: painted (RAL 9006)
Cover cap: PP
Fastening material: Steel; galvanized

Scope of delivery: Set incl. fastening material (FS)

Type	Fmax	Mmax	Mmax
40x160	9000 N	250 Nm	60 Nm

FS7

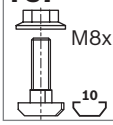

80x80

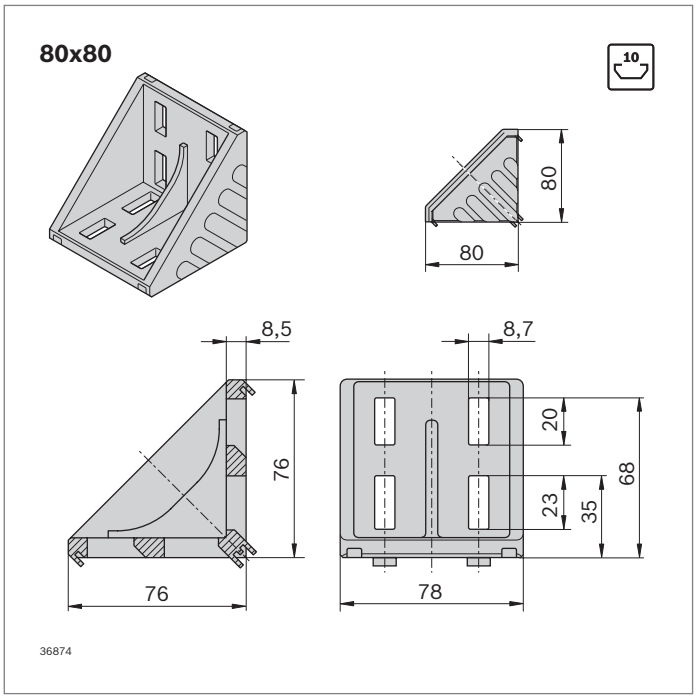

80x80	Slot	ESD		No.	FS
Set (standard)	10 / 10		1	**3 842 530 360**	8xFS7
designLINE set	10 / 10		1	**3 842 551 612**	8xFS7
Bracket (standard)	10		20	**3 842 530 231**	
Cover cap, signal gray			20	**3 842 548 860**	
Cover cap, black			20	**3 842 548 861**	

Material: Bracket: Diecast aluminum, vibratory ground
designLINE bracket: painted (RAL 9006)
Cover cap: PP
Fastening material: Steel; galvanized

Scope of delivery: Set incl. fastening material (FS)

Type	Fmax	Mmax	Mmax	Mmax
80x80	14000 N	500 Nm	1000 Nm	400 Nm

FS7

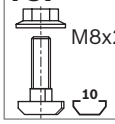

45x45

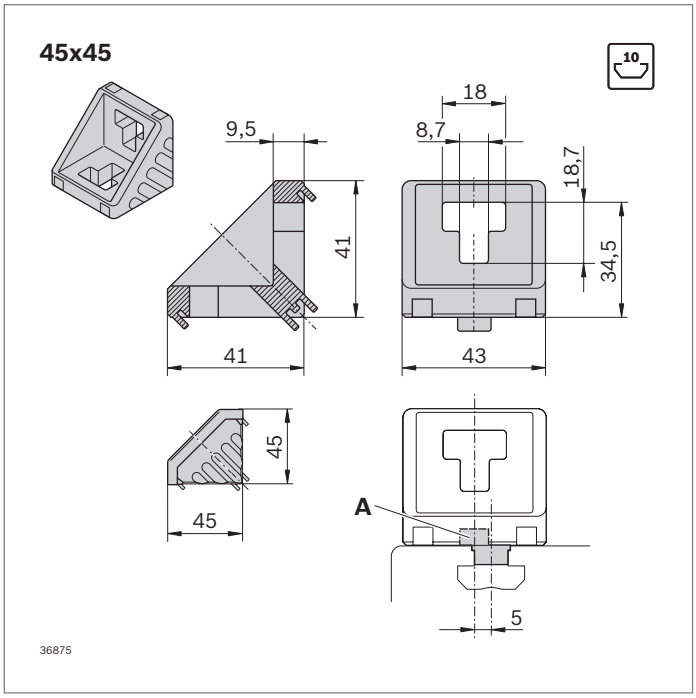

45x45	Slot	ESD		No.	FS
Set (standard)	10 / 10		1	**3 842 523 561**	2xFS7
designLINE set	10 / 10		1	**3 842 551 606**	2xFS7
Bracket (standard)	10		100	**3 842 523 558**	
Cover cap, signal gray			100	**3 842 548 862**	
Cover cap, black			20	**3 842 548 863**	
Sliding block, offset (**A**)	10		100	**3 842 523 593**	

Material: Bracket: Diecast aluminum, vibratory ground
designLINE bracket: painted (RAL 9006)
Sliding block, offset: PA; black
Cover cap: PP
Fastening material: Steel; galvanized

Scope of delivery: Set incl. fastening material (FS)

Type	Fmax	Mmax	Mmax	Mmax
45x45	3000 N	60 Nm	160 Nm	–

FS7

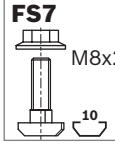

45x90

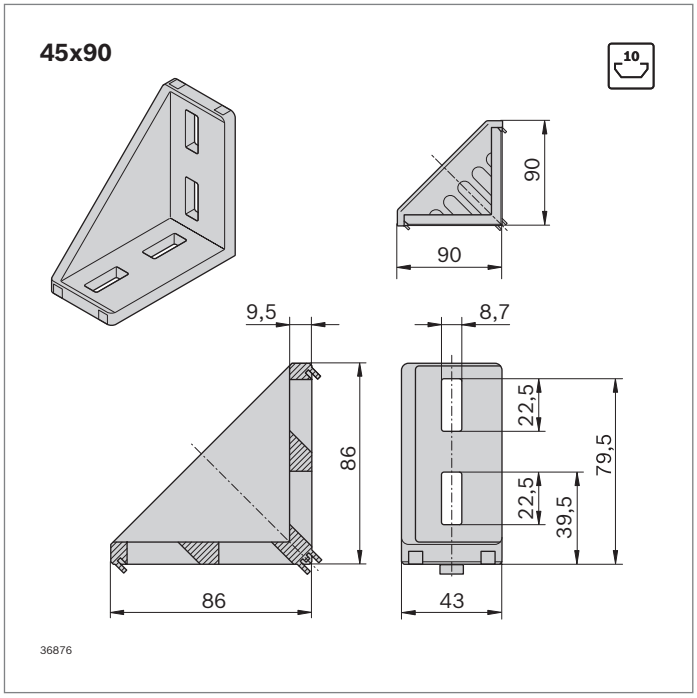

45x90	Slot	ESD		No.	FS
Set (standard)	10 / 10		1	**3 842 523 570**	4xFS7
designLINE set	10 / 10		1	**3 842 551 607**	4xFS7
Bracket (standard)	10		100	**3 842 523 567**	
Cover cap, signal gray			20	**3 842 548 864**	
Cover cap, black			20	**3 842 548 865**	

Material: Bracket: Diecast aluminum, vibratory ground
designLINE bracket: painted (RAL 9006)
Cover cap: PP
Fastening material: Steel; galvanized

Scope of delivery: Set incl. fastening material (FS)

Type	Fmax	Mmax	Mmax	Mmax
45x90	6000 N	180 Nm	400 Nm	60 Nm

FS7

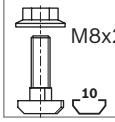

45x180

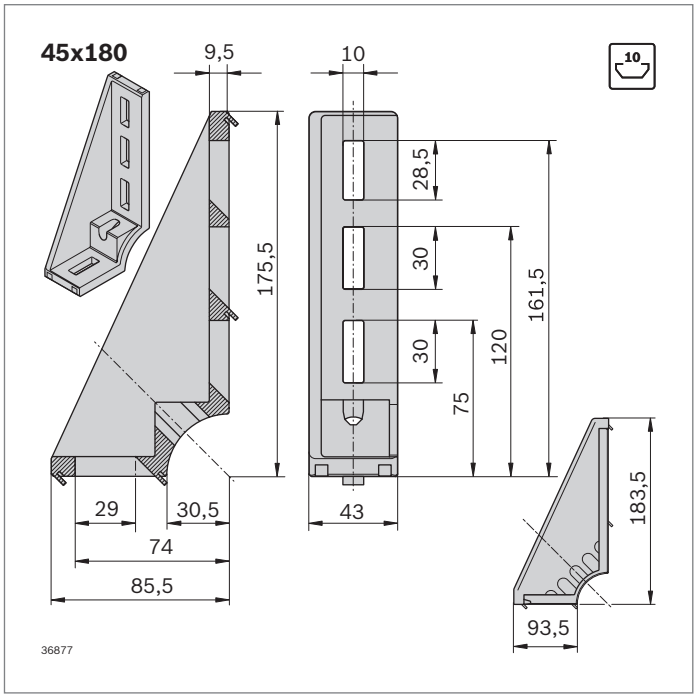

45x180	Slot	ESD		No.	FS
designLINE set	10 / 10		1	**3 842 551 608**	2xFS7
Bracket (standard)	10		20	**3 842 523 583**	
Cover cap, signal gray			20	**3 842 548 866**	
Cover cap, black			20	**3 842 548 867**	

Material: Bracket: Diecast aluminum, vibratory ground
designLINE bracket: painted (RAL 9006)
Cover cap: PP
Fastening material: Steel; galvanized

Scope of delivery: Set incl. fastening material (FS)

Type	Fmax	Mmax	Mmax
45x180	9000 N	250 Nm	65 Nm

FS7

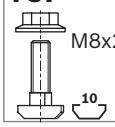

90x90

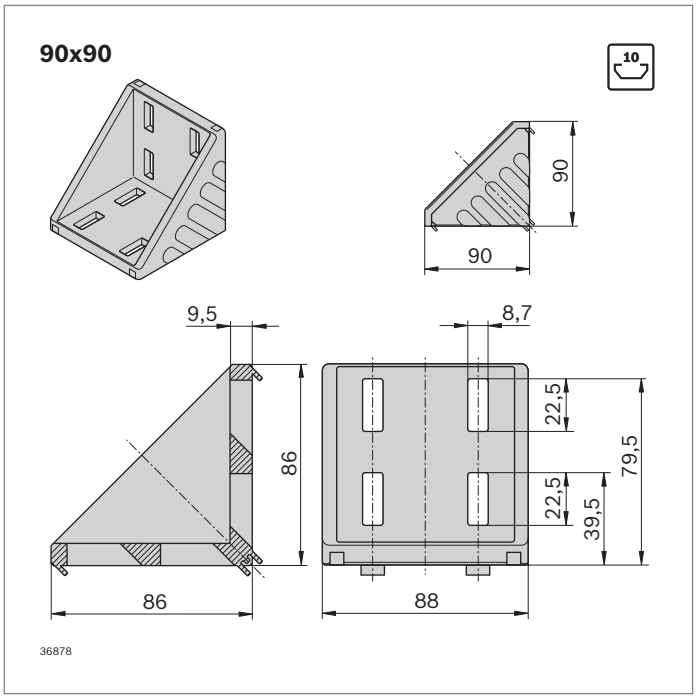

90x90	Slot	ESD		No.	FS
Set (standard)	10 / 10		1	**3 842 523 578**	8xFS7
designLINE set	10 / 10		1	**3 842 551 613**	8xFS7
Bracket (standard)	10		20	**3 842 523 575**	
Cover cap, signal gray			20	**3 842 548 868**	
Cover cap, black			20	**3 842 548 869**	

Material: Bracket: Diecast aluminum, vibratory ground
designLINE bracket: painted (RAL 9006)
Cover cap: PP
Fastening material: Steel; galvanized

Scope of delivery: Set incl. fastening material (FS)

Type	Fmax	Mmax	Mmax	Mmax
90x90	12000 N	370 Nm	800 Nm	200 Nm

FS7

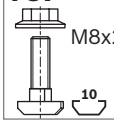

43x42

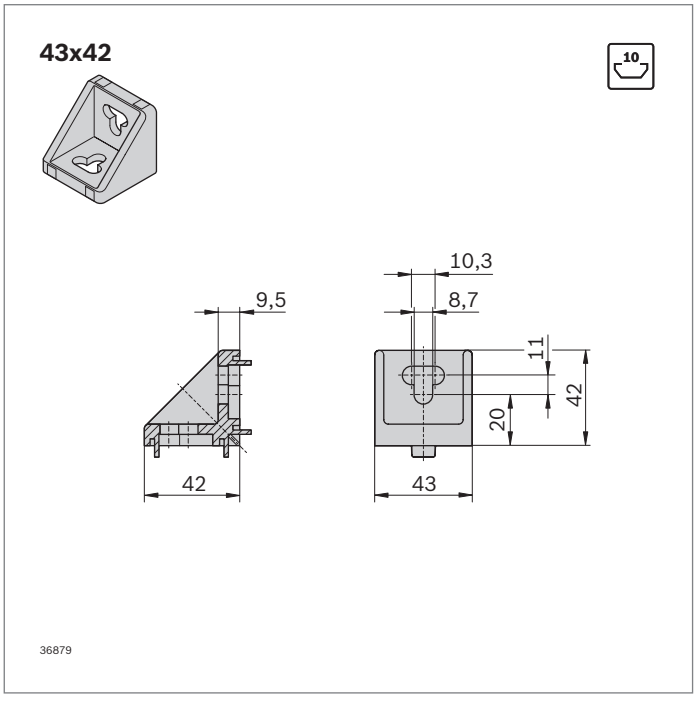

43x42	Slot	ESD		No.	FS
Set (standard)	10 / 10		1	**3 842 352 009**	2xFS7
Bracket (standard)	10		100	**3 842 348 526**	

Material: Bracket: Diecast aluminum
Fastening material: Steel; galvanized

Scope of delivery: Set incl. fastening material (FS)

Type	Fmax	Mmax	Mmax	Mmax
43x42	2000 N	–	160 Nm	–

FS7

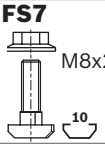

50x50

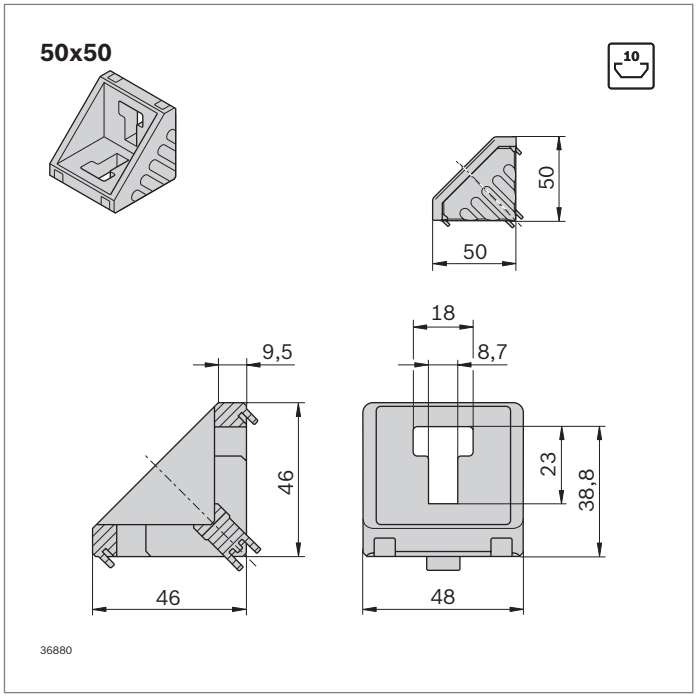

50x50	Slot	ESD		No.	FS
Set (standard)	10 / 10		1	**3 842 530 259**	2xFS7
Bracket (standard)	10		20	**3 842 530 381**	
Cover cap, signal gray			20	**3 842 548 870**	
Cover cap, black			20	**3 842 548 871**	

Material: Bracket: Diecast aluminum, vibratory ground
Cover cap: PP
Fastening material: Steel; galvanized

Scope of delivery: Set incl. fastening material (FS)

Type	F_{max}	M_{max}	M_{max}	M_{max}
50x50	4000 N	125 Nm	250 Nm	38 Nm

FS7

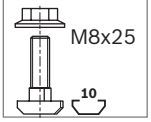

50x100

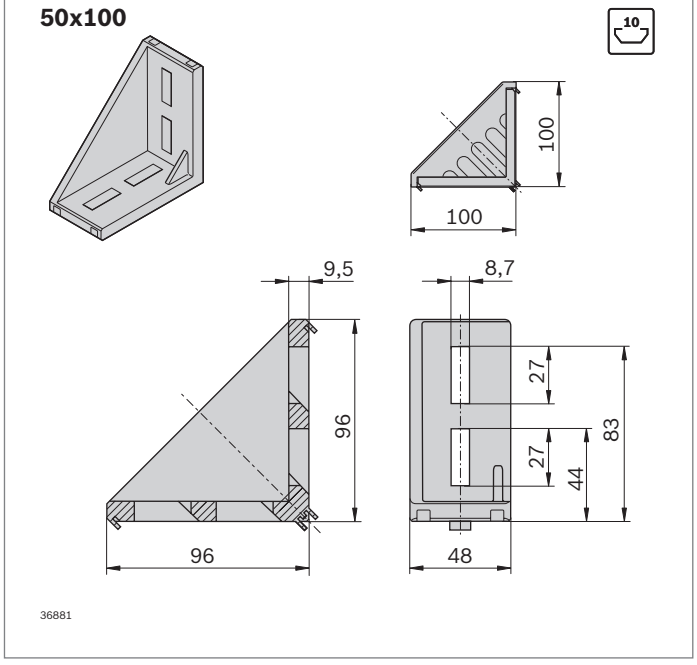

50x100	Slot	ESD		No.	FS
Set (standard)	10 / 10		1	**3 842 530 260**	4xFS7
Bracket (standard)	10		20	**3 842 530 382**	
Cover cap, signal gray			20	**3 842 548 872**	
Cover cap, black			20	**3 842 548 873**	

Material: Bracket: Diecast aluminum, vibratory ground
Cover cap: PP
Fastening material: Steel; galvanized

Scope of delivery: Set incl. fastening material (FS)

Type	F_{max}	M_{max}	M_{max}	M_{max}
50x100	7500 N	300 Nm	600 Nm	73 Nm

FS7

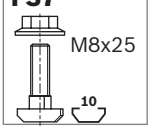

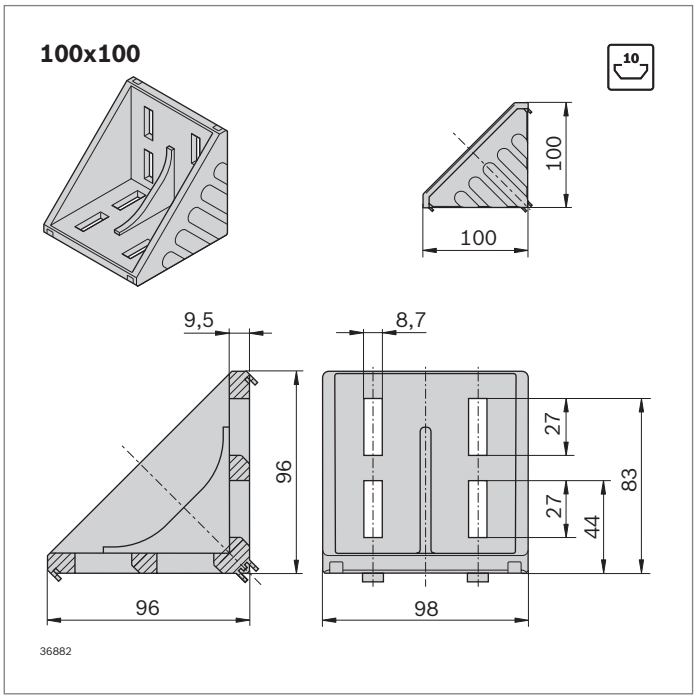

100x100	Slot	ESD		No.	FS
Set (standard)	10 / 10		1	**3 842 530 361**	8xFS7
Bracket (standard)	10		20	**3 842 530 460**	
Cover cap, signal gray			20	**3 842 548 874**	
Cover cap, black			20	**3 842 548 875**	

Material: Bracket: Diecast aluminum, vibratory ground
Cover cap: PP
Fastening material: Steel; galvanized

Scope of delivery: Set incl. fastening material (FS)

Type	Fmax	Mmax	Mmax	Mmax
100x100	15000 N	550 Nm	1100 Nm	480 Nm

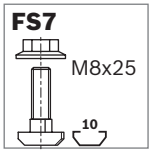

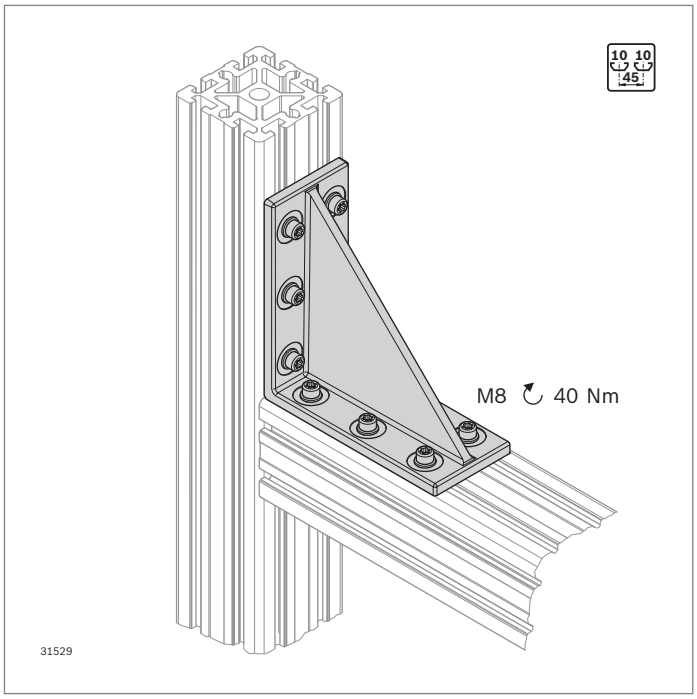

Heavy-duty connector 180x180 dynamic load



- Heavy-duty connector for reliable absorption of high forces
- Can be used for both static and dynamic forces
- Connection possible in any position
- Profile finishing: Not required
- Calculation program for static and dynamic forces included in MT*pro* planning software
- Focus profile: 90x90, 90x180, 90x360

Required accessories:
Mounting kit

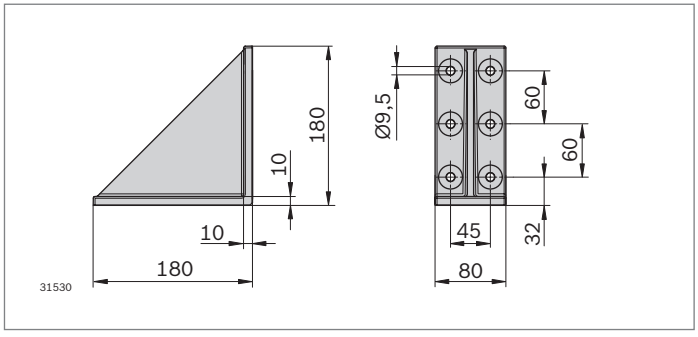

180x180	Slot	ESD	No.
	10		**3 842 555 616**

Material:	Cast iron; galvanized
Scope of delivery:	Bracket

Type	F_{max}	M_{max}	M_{max}	M_{max}
180x180	30000 N	5600 Nm	5600 Nm	1400 Nm

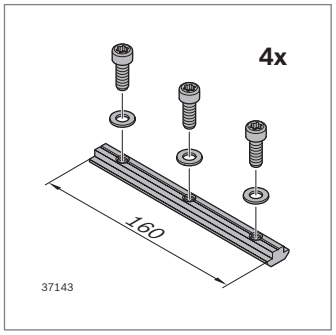

Slot	F_{max}
10 (M8)	6000 ... 18000 N

Mounting kit

- For connecting a heavy-duty angle to a profile
- Set consists of 4 sliding blocks and 12 screws with washers

Mounting kit	Slot	M	ESD		No.
	10	8		Set	**3 842 548 955**

Material:	Screws: Steel; galvanized Sliding block: Steel; galvanized
Scope of delivery:	4 x sliding blocks, 12 x washers, 12 x screws M8 10.9 microencapsulated

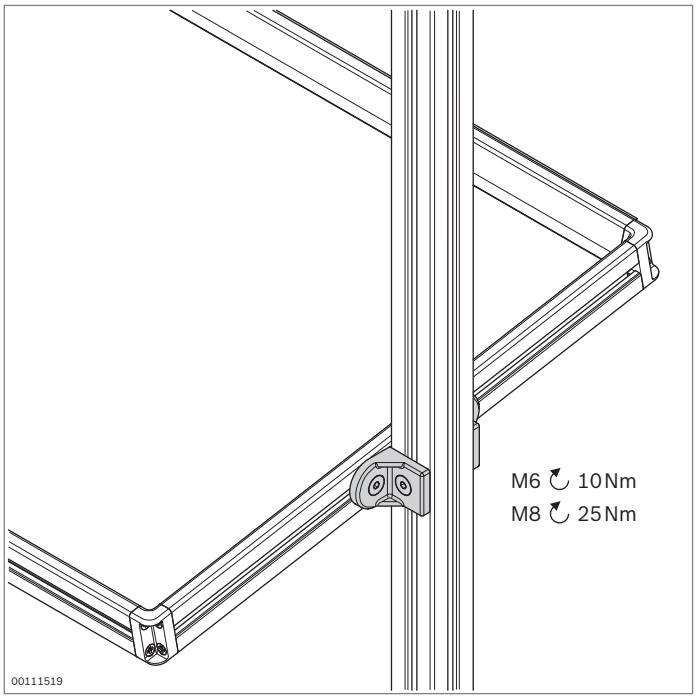

Bracket R

designLINE

- For connecting profiles at any angle
- No interfering edges thanks to rounded bracket
- Brackets with centering lugs for rapid, precise assembly with protection against turning
- Centering lugs can be easily broken off for assembly on plates or at right angles to the slot
- *designLINE* version with special silver paint (RAL 9006) for an attractive, high-quality design
- Profile finishing: Not required

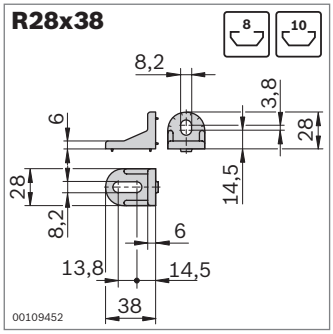



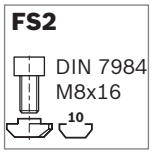

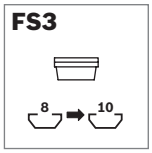

R28x38	Slot	ESD		No.	FS
Set (standard)	8 / 10		1	**3 842 515 547**	FS1, FS2, 2xFS3
	10 / 10		1	**3 842 521 580**	2xFS2, 4xFS3
designLINE set	8 / 10		1	**3 842 538 703**	FS1, FS2, 2xFS3
	10 / 10		1	**3 842 538 704**	2xFS2, 4xFS3
Bracket (standard)	8 / 10		100	**3 842 515 473**	

Material: Bracket: Diecast zinc
designLINE bracket: painted (RAL 9006)
Intermediate element: PA; black
Fastening material: Steel; galvanized

Scope of delivery: Set incl. fastening material (FS)

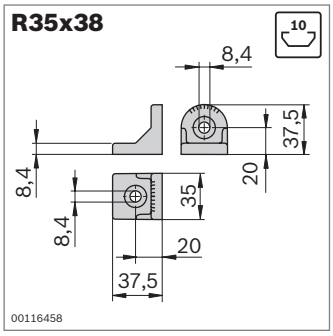

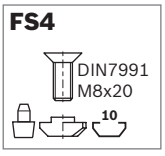

R35x38	Slot	ESD		No.	FS
Set (standard)	10 / 10		1	**3 842 532 274**	2xFS4
designLINE set	10 / 10		1	**3 842 538 705**	2xFS4
Bracket (standard)	10		100	**3 842 529 020**	

Material: Bracket: Diecast aluminum
designLINE bracket: painted (RAL 9006)
Centering bolts: PA6, black
Fastening material: Steel; galvanized

Scope of delivery: Set incl. fastening material (FS)

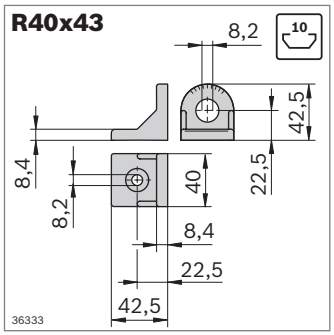

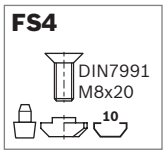

R40x43	Slot	ESD		No.	FS
Set (standard)	10 / 10		1	**3 842 518 424**	2xFS4
designLINE set	10 / 10		1	**3 842 538 706**	2xFS4
Bracket (standard)	10		100	**3 842 504 760**	

Material: Bracket: Diecast zinc
designLINE bracket: painted (RAL 9006)
Centering bolts: PA6, black
Fastening material: Steel; galvanized

Scope of delivery: Set incl. fastening material (FS)

3

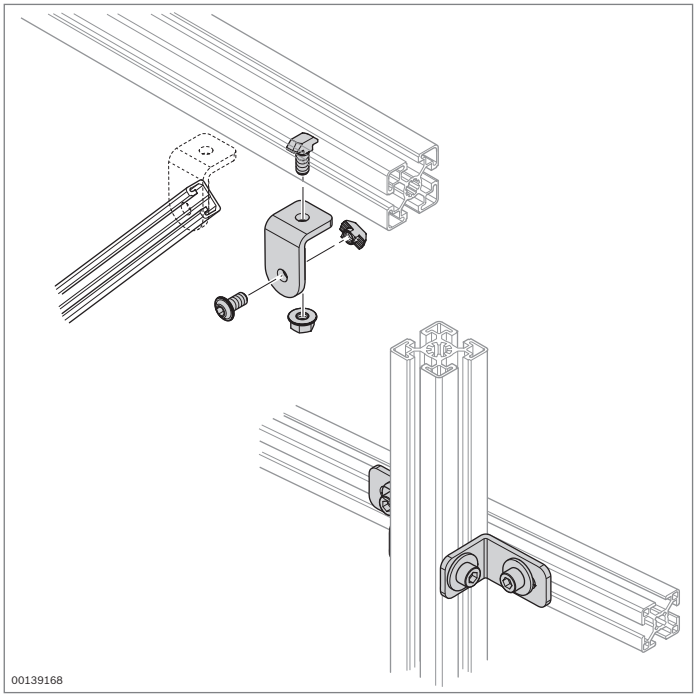

Steel bracket



- Steel bracket without centering lugs for fastening at any angle
- Profile finishing: Not required

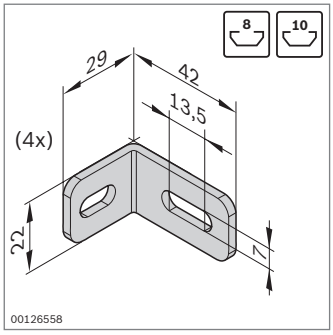

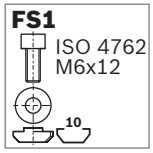

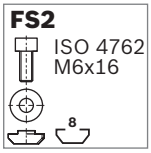

Bracket set	Slot	ESD		No.	FS
	8 / 10		4	**3 842 537 862**	4xFS1, 4xFS2

Material: Steel; galvanized
Fastening material: Steel; galvanized
Scope of delivery: Set incl. fastening material (FS)

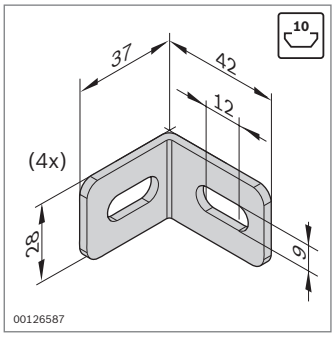

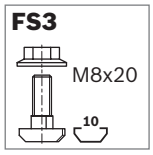

Bracket set	Slot	ESD		No.	FS
	10 / 10		4	**3 842 537 861**	8xFS3

Material: Steel; galvanized
Fastening material: Steel; galvanized
Scope of delivery: Set incl. fastening material (FS)

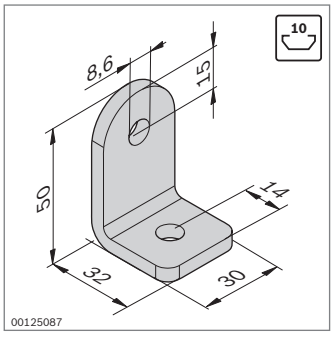

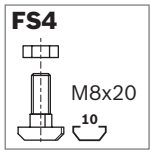

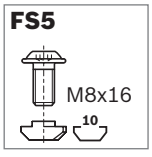

Bracket set	Slot	ESD		No.	FS
	10 / 10		20	**3 842 536 729**	FS4, FS5

Material: Steel; galvanized
Fastening material: Steel; galvanized
Scope of delivery: Set incl. fastening material (FS)

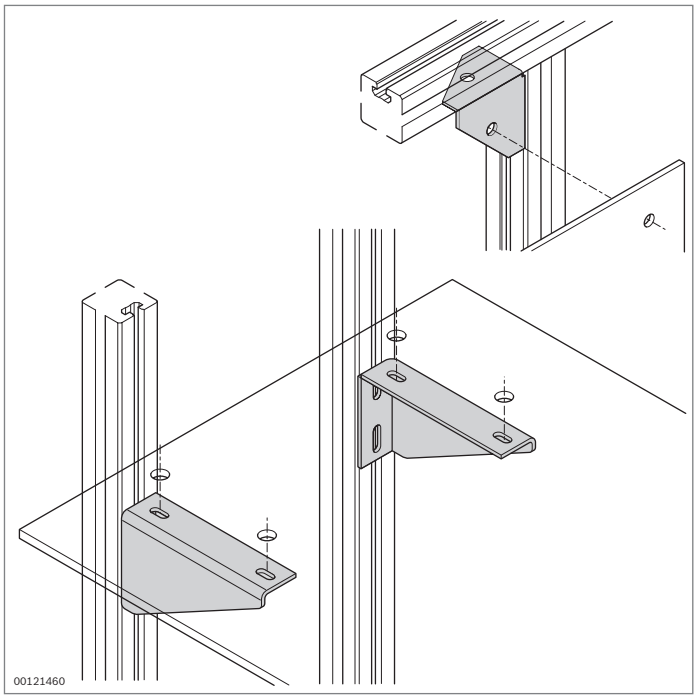

Metal bracket
Supporting bracket



Metal bracket

- Metal bracket for right-angled profile connections
- Screw fitting of panel elements in the stiffening fin bore
- Profile finishing: Not required

Supporting bracket

- Supporting bracket for fastening panel elements to profiles, e.g. for shelves
- Profile finishing: Not required

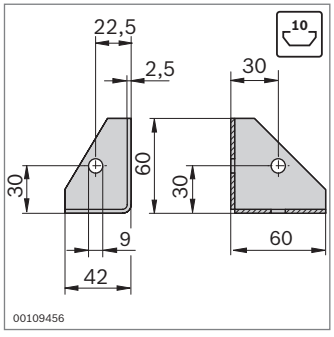

Metal bracket	ESD		No.
	ESD	20	**3 842 146 813**

Material: Sheet steel; galvanized

Required accessories:

- T-bolt M8x20, 10 mm slot, **3 842 528 715** (p. 3-6)
- Flange nut M8, **3 842 345 081** (p. 3-6)

Supporting bracket, left

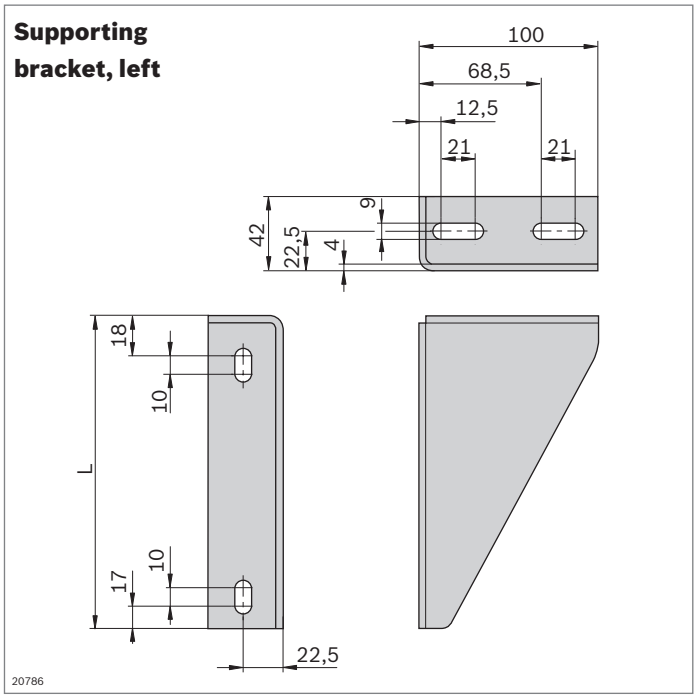

Supporting bracket		L (mm)	ESD	No.	FS
left	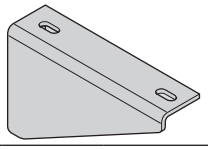	255	ESD	**3 842 536 119**	2xFS1
		335	ESD	**3 842 536 121**	2xFS1
		415	ESD	**3 842 536 123**	2xFS1
		495	ESD	**3 842 536 125**	2xFS1
right	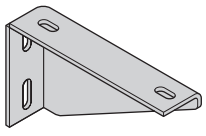	255	ESD	**3 842 536 120**	2xFS1
		335	ESD	**3 842 536 122**	2xFS1
		415	ESD	**3 842 536 124**	2xFS1
		495	ESD	**3 842 536 126**	2xFS1

Material: Sheet steel; powder-coated, RAL 7037
Fastening material: Steel; galvanized

Scope of delivery: Incl. fastening material (FS)

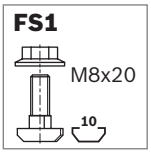

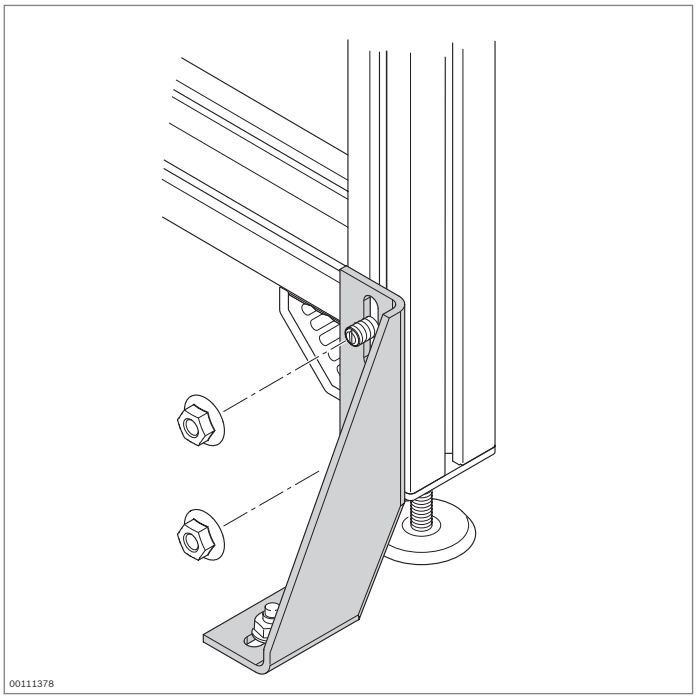

Foundation bracket



- Foundation bracket for securing frames to the floor
- The drilled hole for the floor dowel can be created without removing the foundation bracket
- Profile finishing: Not required

Required accessories:

- T-bolt M8x20, 10 mm slot, **3 842 528 715** (p. 3-6)
- Flange nut M8, **3 842 345 081** (p. 3-6)
- Floor dowel

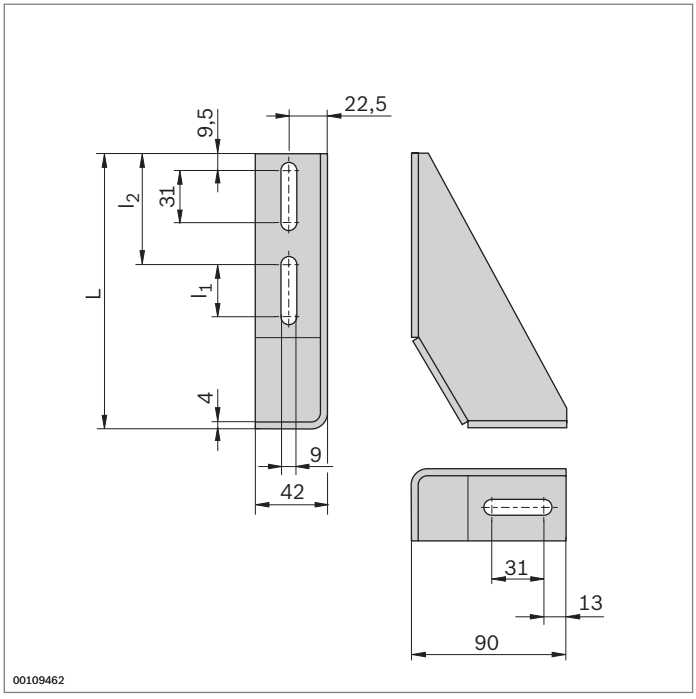

Foundation bracket	L (mm)	l_1 (mm)	l_2 (mm)		No.
	160	31	64.5	20	**3 842 146 815**
	210	91	54.5	20	**3 842 146 848**

Material: Sheet steel; galvanized

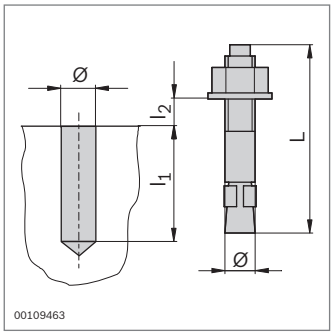

Floor dowel	ø	L (mm)	l_1 (mm)	$l_{2\ max}$ (mm)		No.
	8	80	65	15	100	**3 842 526 560**

Material: Steel; galvanized

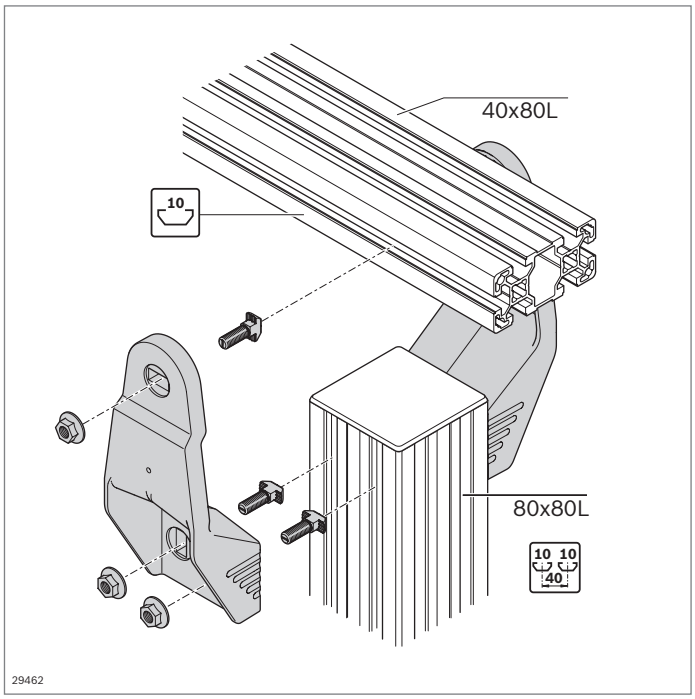

Holder AL

10

- For connecting profiles at right-angles to each other and with defined spacing, e.g. for floor supports made of 80x80L or 60x60 profiles
- Longitudinal connection possible in all profiles with 10 mm slot
- Transverse connection possible with 40 mm slot spacing
- Profile finishing: Not required

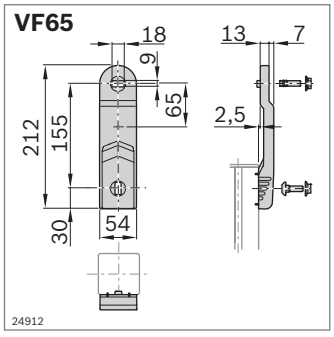

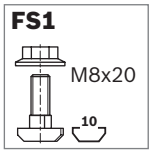

Holder		No.	FS
VF*plus* 65	Set	**3 842 546 625**	8xFS1
Material:	Holder: Diecast aluminum; powder-coated (RAL 9006) Fastening material: Steel; galvanized		
Scope of delivery:	2 x holder, fastening material (FS)		

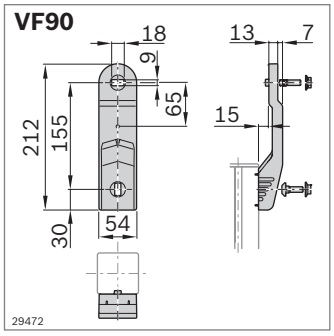

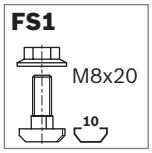

Holder		No.	FS
VF*plus* 90	Set	**3 842 546 626**	8xFS1
Material:	Holder: Diecast aluminum; powder-coated (RAL 9006) Fastening material: Steel; galvanized		
Scope of delivery:	2 x holder, fastening material (FS)		

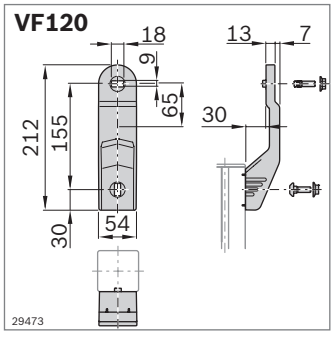

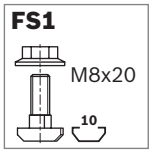

Holder		No.	FS
VF*plus* 120	Set	**3 842 546 627**	8xFS1
Material:	Holder: Diecast aluminum; powder-coated (RAL 9006) Fastening material: Steel; galvanized		
Scope of delivery:	2 x holder, fastening material (FS)		

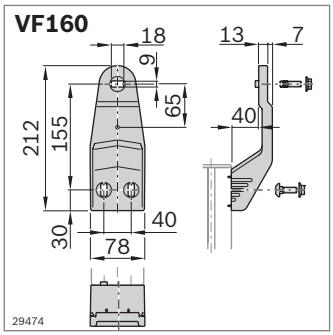

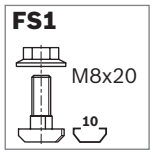

Holder		No.	FS
VF*plus* 160	Set	**3 842 546 628**	8xFS1

Material: Holder: Diecast aluminum; powder-coated (RAL 9006)
Fastening material: Steel; galvanized

Scope of delivery: 2 x holder, fastening material (FS)

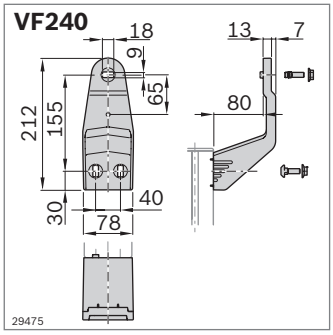

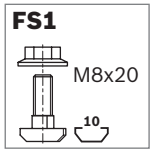

Holder		No.	FS
VF*plus* 240	Set	**3 842 546 629**	8xFS1

Material: Holder: Diecast aluminum; powder-coated (RAL 9006)
Fastening material: Steel; galvanized

Scope of delivery: 2 x holder, fastening material (FS)

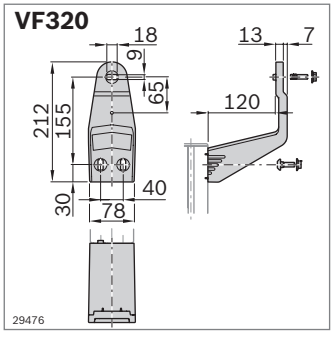

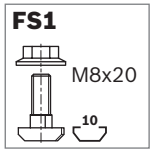

Holder		No.	FS
VF*plus* 320	Set	**3 842 546 630**	8xFS1

Material: Holder: Diecast aluminum; powder-coated (RAL 9006)
Fastening material: Steel; galvanized

Scope of delivery: 2 x holder, fastening material (FS)

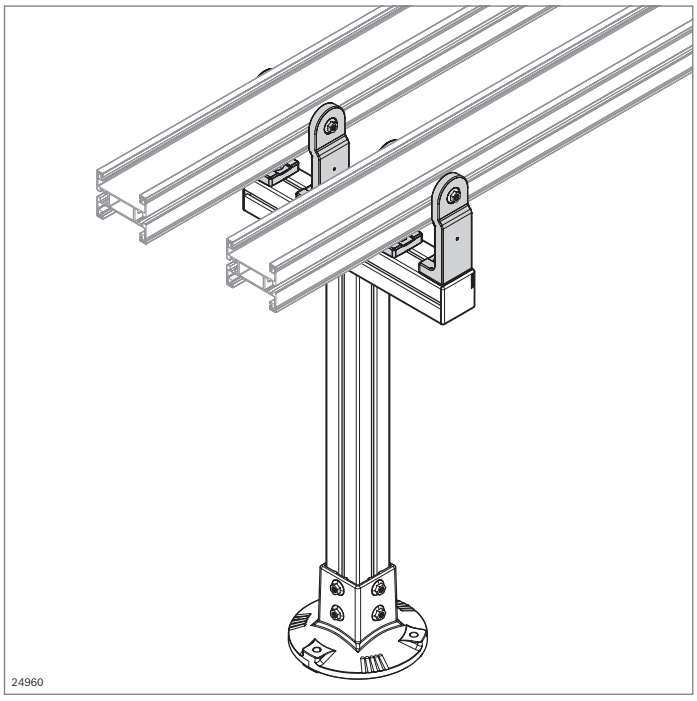

Supporting bracket AL

10

- Supporting bracket for connecting two profiles with defined spacing (approx. 2–3 m)
- Profile finishing: Not required
- Centering lugs make centering the supporting brackets in the slot easy
- If the centering lugs are removed, the supporting bracket can also be used for upward and downward sloping sections (up to approx. 45° depending on the return chain)
- Very simple assembly thanks to pluggable screwed connection
- Easy-to-clean design with draining surfaces

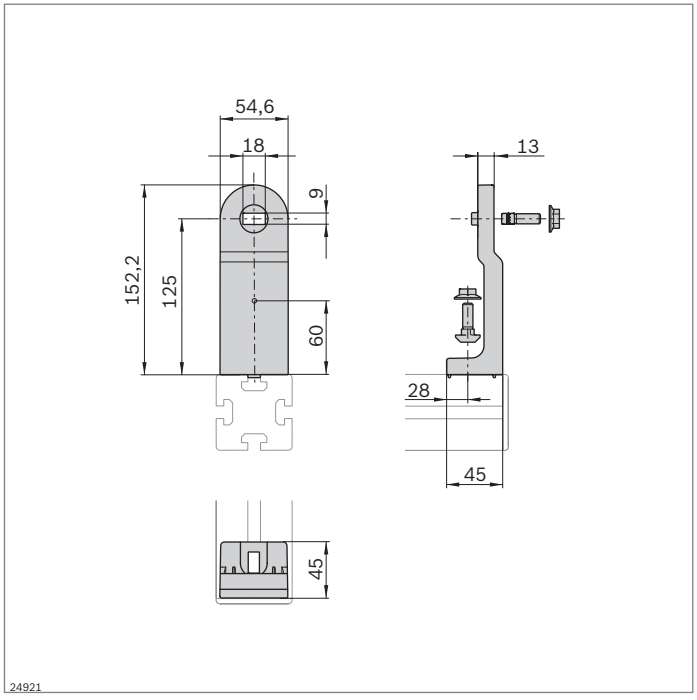

Supporting bracket VF*plus* AL		No.	FS
	Set	**3 842 546 632**	6xFS1
Material:	Holder: Diecast aluminum, silver Fastening material: Steel; galvanized		
Scope of delivery:	Incl. fastening material (FS)		

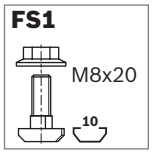

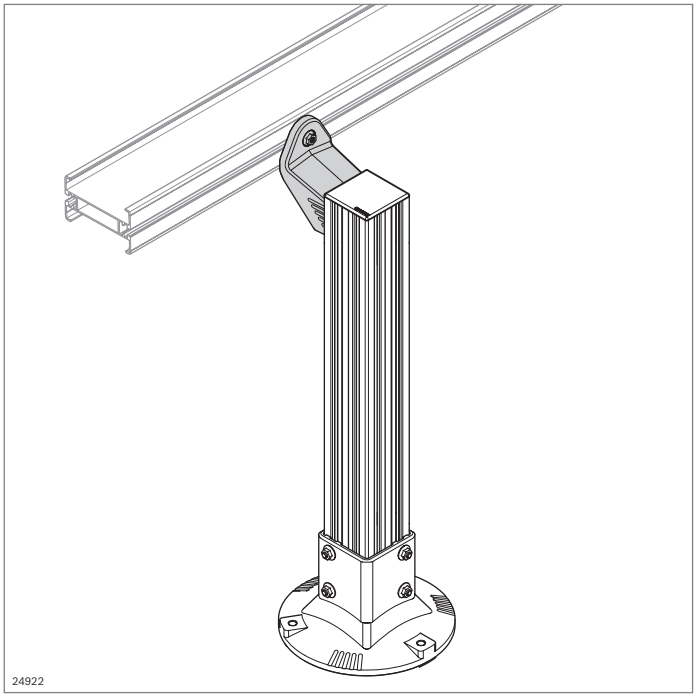

Supporting bracket AL, lateral

10

- Supporting bracket for connecting two profiles with defined spacing (approx. 2–3 m)
- Profile finishing: Not required
- Centering lugs make centering the supporting brackets in the slot easy
- If the centering lugs are removed, the supporting bracket can also be used for upward and downward sloping sections (up to approx. 45° depending on the return chain)
- Designed for attachment to a vertical 80x80 strut profile

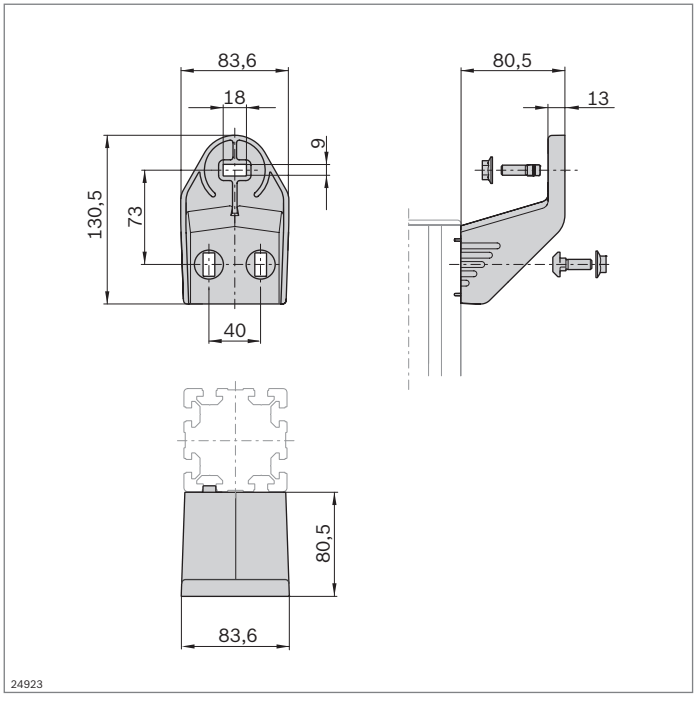

Supporting bracket VF*plus* lateral AL		No.	FS
	Set	**3 842 547 461**	6xFS1

Material: Holder: Diecast aluminum; powder-coated (RAL 9006)
Fastening material: Steel; galvanized
Scope of delivery: Incl. fastening material (FS)

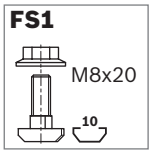

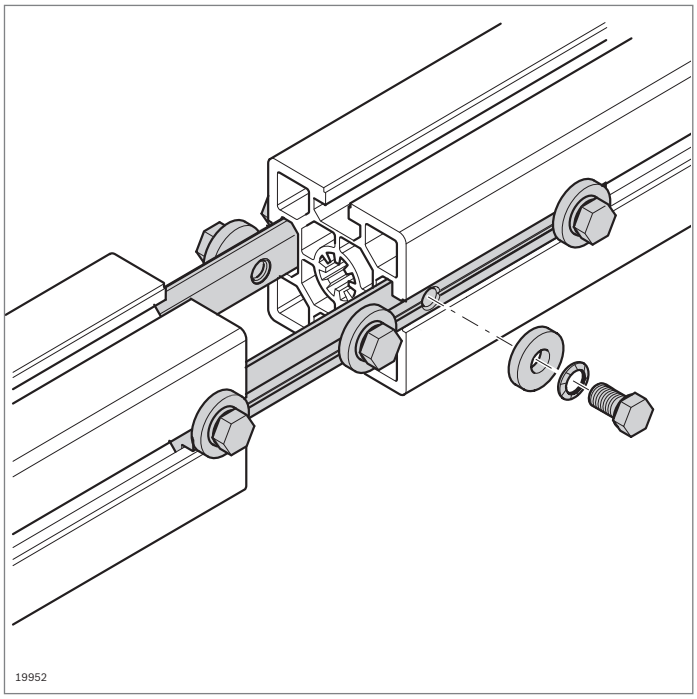

Profile connector



- Profile connector for the end-face connection of any profiles
- For an especially strong connection: One profile connector per slot
- Profile finishing: Not required

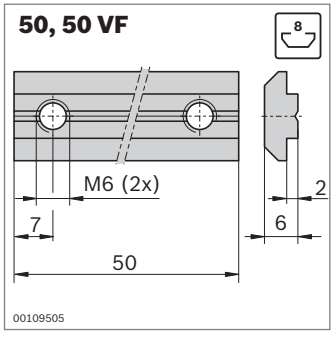

Profile connector	↻ (Nm)	Slot		No.	FS
50 VF	10	8	10	**3 842 536 787**	2xFS2
50	8.5	8	1	**3 842 518 427**	2xFS1

Material: Steel; galvanized; fastening material: Steel; galvanized

Scope of delivery: Incl. fastening material (FS)

FS1

DIN 913 M6x10

FS2

M6x8 ISO 4762 A6,4

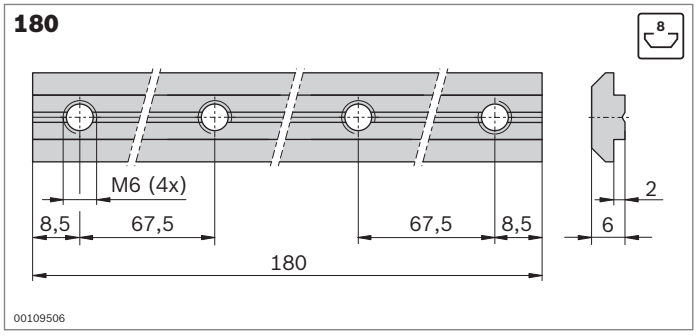

Profile connector	↻ (Nm)	Slot	No.	FS
180	10	8	**3 842 521 216**	4xFS3

Material: Steel; galvanized; fastening material: Steel; galvanized

Scope of delivery: Incl. fastening material (FS)

FS3

DIN 4762 M6x10

DIN 7349 6,4

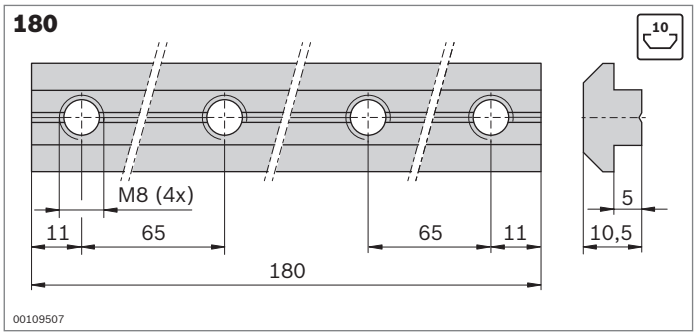

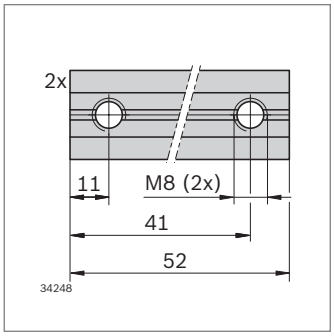

Profile connector	(Nm)	Slot	No.	FS
180	25	10	**3 842 528 746**	4xFS4

Material: Steel; galvanized; fastening material: Steel; galvanized

Scope of delivery: Incl. fastening material (FS)

FS4



Connection kit	(Nm)	Slot		No.	FS
	18	10	Set	**3 842 529 881**	4xFS5

Material: Steel; galvanized; fastening material: Steel; galvanized

Scope of delivery: Set (2 pieces); incl. fastening material

FS5



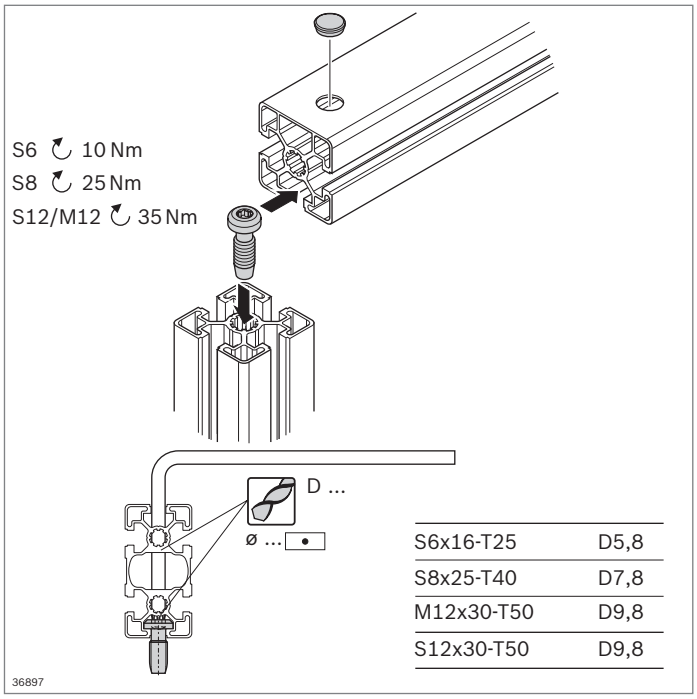

S6x16-T25	D5,8
S8x25-T40	D7,8
M12x30-T50	D9,8
S12x30-T50	D9,8

Central bolt, Anti-torsion element, cover cap

Central bolt

- Best-value connection element
- Self-tapping screw, can be mounted without profile finishing
- Profile finishing:
  - Thread cutting for M12x30 screw
  - Through-hole for screwdriver/offset screwdriver

Tools:
Offset screwdriver (p. 14-5)

S6x16-T25

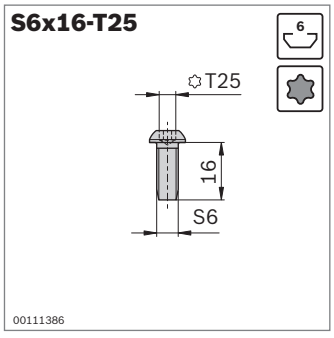

S8x25-T40

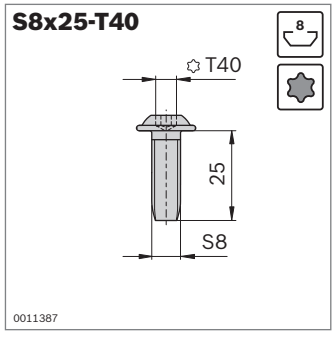

Central bolt	Slot	ESD		No.
S6x16-T25 (self-tapping)	6		100	**3 842 528 593**
S8x25-T40 (self-tapping)	8		100	**3 842 527 174**

Material: Steel; galvanized

M12x30-T50

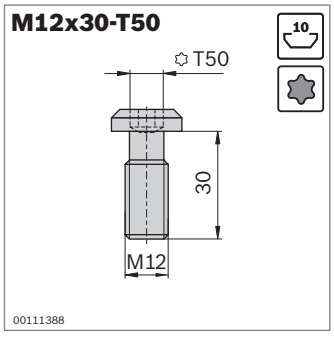

S12x30-T50

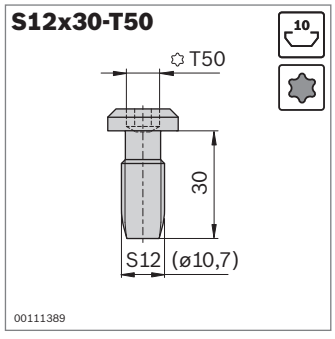

Central bolt	Slot	ESD		No.
M12x30-T50	10		100	**3 842 530 235**
S12x30-T50 (self-tapping)	10		100	**3 842 530 236**

Material: Steel; galvanized

Size	F_{max}	M_{max}
S6	500 N	8 Nm
S8	800 N	43 Nm
S12	1300 N	80 Nm
M12	3000 N	80 Nm

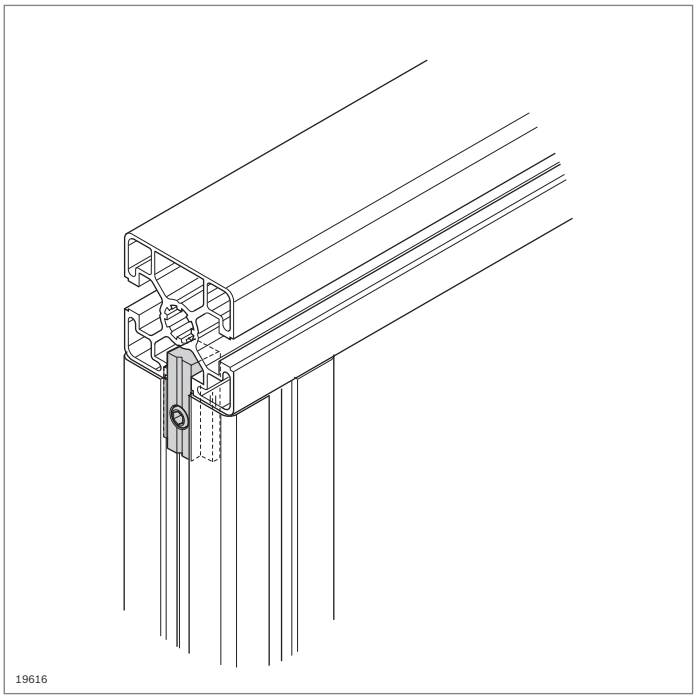

Anti-torsion element

- Provides torsion resistance for profile connections with central bolts or quick connectors
- Subsequent installation in the connection possible

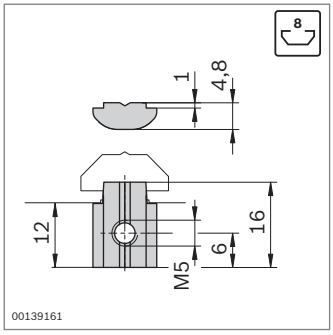

FS1

DIN 916
M5x8

Anti-torsion element		Slot		No.	FS
		8	10	**3 842 530 325**	FS1
Material:	Steel; galvanized Fastening material: Steel; galvanized				

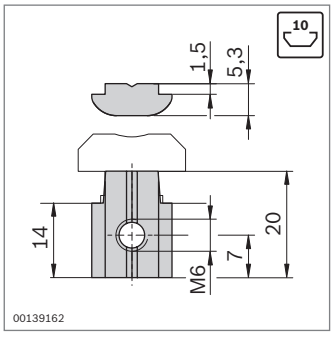

FS2

DIN 916
M6x12

Anti-torsion element		Slot		No.	FS
		10	10	**3 842 530 326**	FS2
Material:	Steel; galvanized Fastening material: Steel; galvanized				

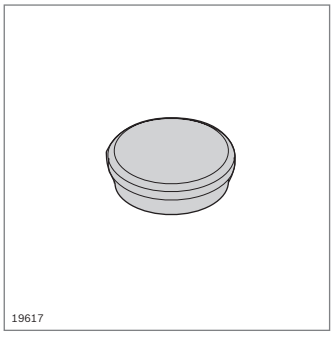

Cover cap

- For sealing through-holes in closed profiles

Cover cap		D (mm)		No.
		5.8	100	**3 842 551 032**
		7.8	100	**3 842 551 034**
		9.8	100	**3 842 551 036**
Material:	PA; signal gray RAL 7004			

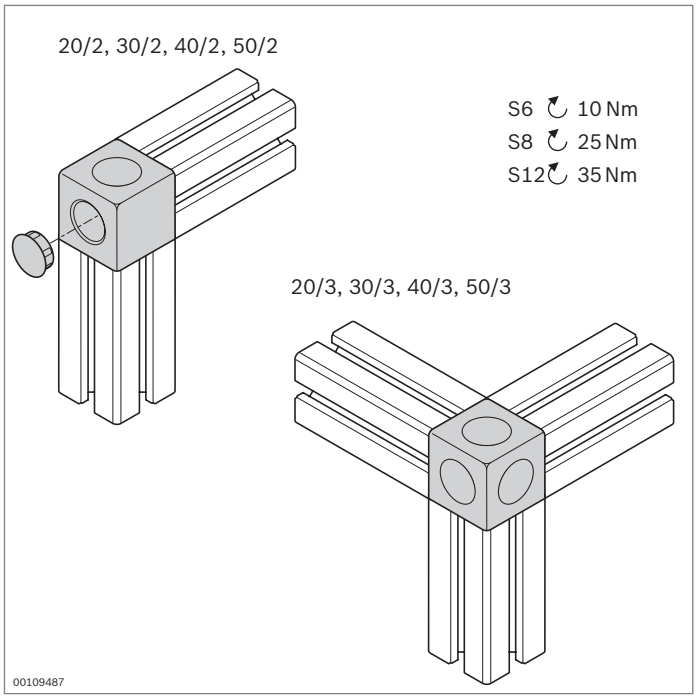

Cubic connector



designLINE

- For torsion-proof corner connections of profiles with equivalent cross-sections
- *designLINE* version with special silver paint (RAL 9006) for an attractive, high-quality design
- Cover caps to cover the openings
- Screw fitting on profile with self-tapping screws
- Profile finishing: Not required

Technical data (p. 18-18)

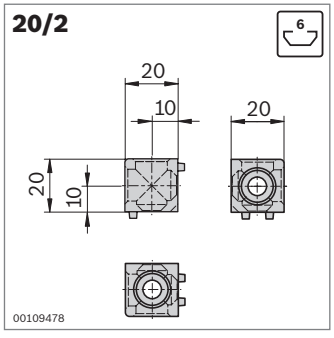

Type	M_{max}
20/2	18 Nm

FS1



Cubic connector 20/2		Slot	ESD		No.	FS
Set (standard), signal gray		6	*	1	**3 842 549 858**	2xFS1
designLINE set, signal gray		6	*	1	**3 842 549 859**	2xFS1
Cubic connector		6		20	**3 842 523 875**	
Cover cap D12	signal gray (PP)			100	**3 842 548 700**	
	black (PP)			100	**3 842 548 704**	
Countersunk screw S6x16		6		100	**3 842 517 132**	

Material: Cubic connector: Diecast aluminum
designLINE cubic connector: painted (RAL 9006)
Fastening material: Steel; galvanized

Scope of delivery: Set incl. fastening material (FS), cover caps

* Cubic connector creates conductive connection, but the cover caps included in the set are not ESD-compatible.

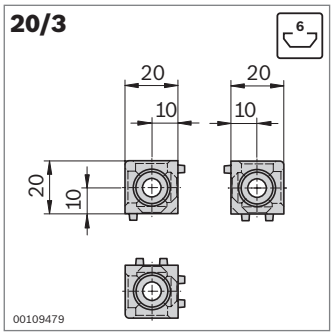

Type	M_{max} 2 M_{max} 2
20/3	23 Nm

FS1



Cubic connector 20/3		Slot	ESD		No.	FS
Set (standard), signal gray		6	*	1	**3 842 549 860**	3xFS1
designLINE set, signal gray		6	*	1	**3 842 549 861**	3xFS1
Cubic connector		6		20	**3 842 523 872**	
Cover cap D12	signal gray (PP)			100	**3 842 548 700**	
	black (PP)			100	**3 842 548 704**	
Countersunk screw S6x16		6		100	**3 842 517 132**	

Material: Cubic connector: Diecast aluminum
designLINE cubic connector: painted (RAL 9006)
Fastening material: Steel; galvanized

Scope of delivery: Set incl. fastening material (FS), cover caps

* Cubic connector creates conductive connection, but the cover caps included in the set are not ESD-compatible.

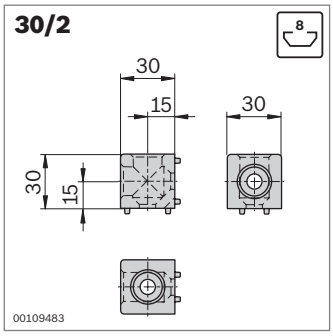

Type	M_{max}
30/2	80 Nm

FS2



Cubic connector 30/2		Slot	ESD		No.	FS
Set (standard), signal gray		8	*	1	**3 842 549 862**	2xFS2
designLINE set, signal gray		8	*	1	**3 842 549 863**	2xFS2
Cubic connector		8		20	**3 842 523 876**	
Cover cap D18	signal gray (PP)			100	**3 842 548 701**	
	black (PP)			100	**3 842 548 705**	
Countersunk screw S8x25		8		100	**3 842 517 543**	

Material: Cubic connector: Diecast aluminum
designLINE cubic connector: painted (RAL 9006)
Fastening material: Steel; galvanized

Scope of delivery: Set incl. fastening material (FS), cover caps

* Cubic connector creates conductive connection, but the cover caps included in the set are not ESD-compatible.

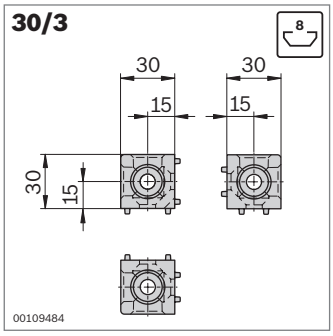

Type	M_{max} 2 M_{max} 2
30/3	85 Nm

FS2



Cubic connector 30/3		Slot	ESD		No.	FS
Set (standard), signal gray		8	*	1	**3 842 549 864**	3xFS2
designLINE set, signal gray		8	*	1	**3 842 549 865**	3xFS2
Cubic connector		8		20	**3 842 523 873**	
Cover cap D18	signal gray (PP)			100	**3 842 548 701**	
	black (PP)			100	**3 842 548 705**	
Countersunk screw S8x25		8		100	**3 842 517 543**	

Material: Cubic connector: Diecast aluminum
designLINE cubic connector: painted (RAL 9006)
Fastening material: Steel; galvanized

Scope of delivery: Set incl. fastening material (FS), cover caps

* Cubic connector creates conductive connection, but the cover caps included in the set are not ESD-compatible.

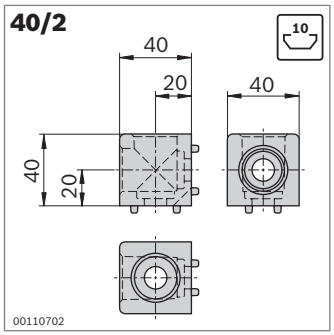

Type	M_{max}
40/2	60 Nm

FS3



Cubic connector 40/2		Slot	ESD		No.	FS
Set (standard), signal gray		10	ESD*	1	**3 842 549 866**	2xFS3
designLINE set, signal gray		10	ESD*	1	**3 842 549 867**	2xFS3
Cubic connector		10	ESD	20	**3 842 529 010**	
Cover cap D24	signal gray (PP)			100	**3 842 548 702**	
	black (PP)		ESD	100	**3 842 548 706**	
Screw S12x30		10	ESD	100	**3 842 530 236**	

Material: Cubic connector: Diecast aluminum
designLINE cubic connector: painted (RAL 9006)
Fastening material: Steel; galvanized

Scope of delivery: Set incl. fastening material (FS), cover caps

* Cubic connector creates conductive connection, but the cover caps included in the set are not ESD-compatible.

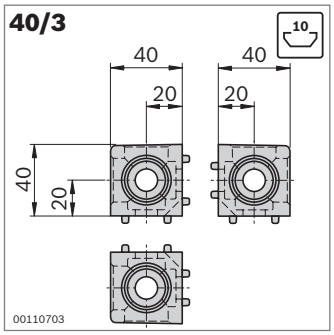

Type	$\frac{M_{max}}{2}$ $\frac{M_{max}}{2}$
40/3	70 Nm

FS3



Cubic connector 40/3		Slot	ESD		No.	FS
Set (standard), signal gray		10	ESD*	1	**3 842 549 868**	3xFS3
designLINE set, signal gray		10	ESD*	1	**3 842 549 869**	3xFS3
Cubic connector		10	ESD	20	**3 842 529 011**	
Cover cap D24	signal gray (PP)			100	**3 842 548 702**	
	black (PP)		ESD	100	**3 842 548 706**	
Screw S12x30		10	ESD	100	**3 842 530 236**	

Material: Cubic connector: Diecast aluminum
designLINE cubic connector: painted (RAL 9006)
Fastening material: Steel; galvanized

Scope of delivery: Set incl. fastening material (FS), cover caps

* Cubic connector creates conductive connection, but the cover caps included in the set are not ESD-compatible.

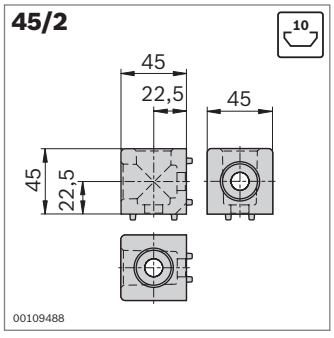

Type		M_{max}
45/2	45x45L	150 Nm
	45x45	200 Nm

FS3



Cubic connector 45/2		Slot	ESD		No.	FS
Set (standard), signal gray		10	ESD*	1	**3 842 549 870**	2xFS3
designLINE set, signal gray		10	ESD*	1	**3 842 549 871**	2xFS3
Cubic connector		10	ESD	20	**3 842 523 877**	
Cover cap D24	signal gray (PP)			100	**3 842 548 702**	
	black (PP)		ESD	100	**3 842 548 706**	
Screw S12x30		10	ESD	100	**3 842 530 236**	

Material: Cubic connector: Diecast aluminum
designLINE cubic connector: painted (RAL 9006)
Fastening material: Steel; galvanized

Scope of delivery: Set incl. fastening material (FS), cover caps

* Cubic connector creates conductive connection, but the cover caps included in the set are not ESD-compatible.

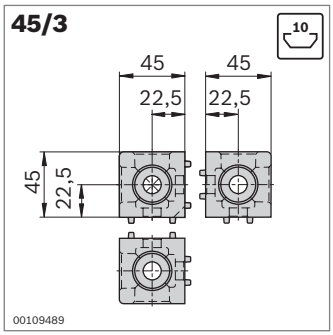

Type		M_{max} / 2 + M_{max} / 2
45/3	45x45L	170 Nm
	45x45	240 Nm

FS3



Cubic connector 45/3		Slot	ESD		No.	FS
Set (standard), signal gray		10	*	1	**3 842 549 872**	3xFS3
designLINE set, signal gray		10	*	1	**3 842 549 873**	3xFS3
Cubic connector		10		20	**3 842 523 874**	
Cover cap D24	signal gray (PP)			100	**3 842 548 702**	
	black (PP)			100	**3 842 548 706**	
Screw S12x30		10		100	**3 842 530 236**	

Material: Cubic connector: Diecast aluminum
designLINE cubic connector: painted (RAL 9006)
Fastening material: Steel; galvanized

Scope of delivery: Set incl. fastening material (FS), cover caps

* Cubic connector creates conductive connection, but the cover caps included in the set are not ESD-compatible.

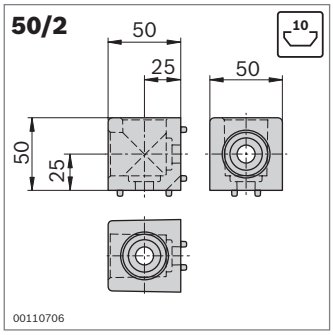

Type	M_{max}
50/2	120 Nm

FS3



Cubic connector 50/2		Slot	ESD		No.	FS
Set (standard), signal gray		10	*	1	**3 842 549 874**	2xFS3
Cubic connector		10		20	**3 842 529 012**	
Cover cap D30	signal gray (PP)			100	**3 842 548 703**	
	black (PP)			100	**3 842 548 707**	
Screw S12x30		10		100	**3 842 530 236**	

Material: Cubic connector: Diecast aluminum
Fastening material: Steel; galvanized

Scope of delivery: Set incl. fastening material (FS), cover caps

* Cubic connector creates conductive connection, but the cover caps included in the set are not ESD-compatible.

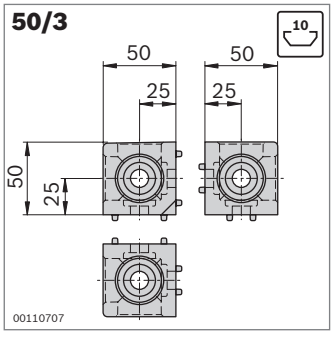

Type	M_{max} / 2 + M_{max} / 2
50/3	140 Nm

FS3

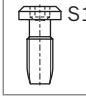

Cubic connector 50/3		Slot	ESD		No.	FS
Set (standard), signal gray		10	*	1	**3 842 549 876**	3xFS3
Cubic connector		10		20	**3 842 529 013**	
Cover cap D30	signal gray (PP)			100	**3 842 548 703**	
	black (PP)			100	**3 842 548 707**	
Screw S12x30		10		100	**3 842 530 236**	

Material: Cubic connector: Diecast aluminum
Fastening material: Steel; galvanized

Scope of delivery: Set incl. fastening material (FS), cover caps

* Cubic connector creates conductive connection, but the cover caps included in the set are not ESD-compatible.

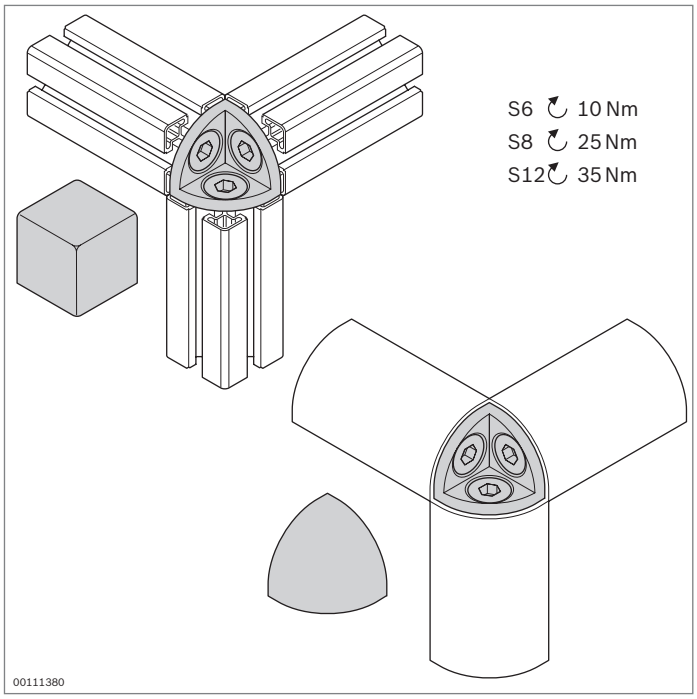

Corner bracket

- Corner bracket for corner connection of three square or half-round profiles with equivalent cross-sections
- Screw fitting on profiles with self-tapping screws
- Ball or cubic-shaped cover caps to prevent injuries and avoid dirt
- Profile finishing: Not required

R20x20

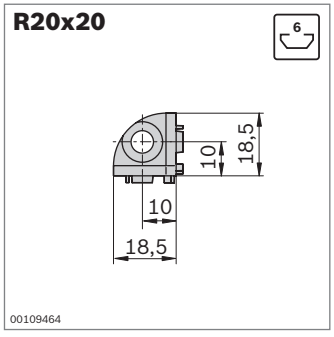

Type	$\frac{M_{max}}{2}$ $\frac{M_{max}}{2}$
20/3	23 Nm

FS1



R20x20		Slot	ESD		No.	FS
Corner bracket		6		1	**3 842 519 318**	3xFS1
Cover cap K (ball)	signal gray (PP)			10	**3 842 548 708**	
	black (PP)			10	**3 842 548 712**	
Cover cap W (cube)	signal gray (PP)			10	**3 842 548 716**	
	black (PP)			10	**3 842 548 720**	

Material: Corner bracket: Diecast zinc
Fastening material: Steel; galvanized

Scope of delivery: Incl. fastening material (FS)

R30x30

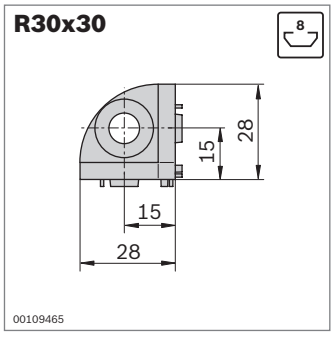

Type	$\frac{M_{max}}{2}$ $\frac{M_{max}}{2}$
30/3	85 Nm

FS2



R30x30		Slot	ESD		No.	FS
Corner bracket		8		1	**3 842 519 319**	3xFS2
Cover cap K (ball)	signal gray (PP)			10	**3 842 548 709**	
	black (PP)			10	**3 842 548 713**	
Cover cap W (cube)	signal gray (PP)			10	**3 842 548 717**	
	black (PP)			10	**3 842 548 721**	

Material: Corner bracket: Diecast zinc
Fastening material: Steel; galvanized

Scope of delivery: Incl. fastening material (FS)

R40x40

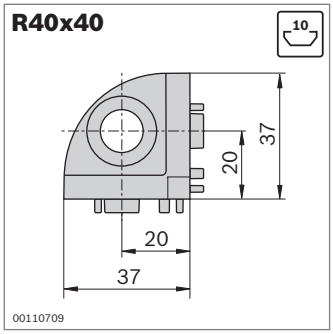

Type	M_{max} 2 / M_{max} 2
40/3	70 Nm

FS3



R40x40		Slot	ESD		No.	FS
Corner bracket		10		1	**3 842 529 404**	3xFS3
Cover cap K (ball)	signal gray (PP)			10	**3 842 548 710**	
	black (PP)			10	**3 842 548 714**	
Cover cap W (cube)	signal gray (PP)			10	**3 842 548 718**	
	black (PP)			10	**3 842 548 722**	

Material: Corner bracket: Diecast zinc
Fastening material: Steel; galvanized
Scope of delivery: Incl. fastening material (FS)

R45x45

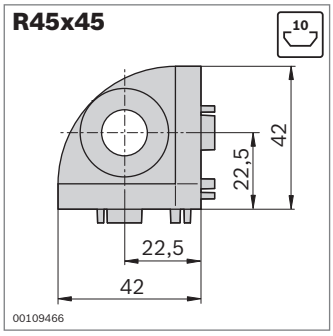

Type		M_{max} 2 / M_{max} 2
45/3	45x45L	170 Nm
	45x45	240 Nm

FS4



R45x45		Slot	ESD		No.	FS
Corner bracket		10		1	**3 842 519 321**	3xFS4
Cover cap K (ball)	signal gray (PP)			10	**3 842 548 711**	
	black (PP)			10	**3 842 548 715**	
Cover cap W (cube)	signal gray (PP)			10	**3 842 548 719**	
	black (PP)			10	**3 842 548 723**	

Material: Corner bracket: Diecast zinc
Fastening material: Steel; galvanized
Scope of delivery: Incl. fastening material (FS)

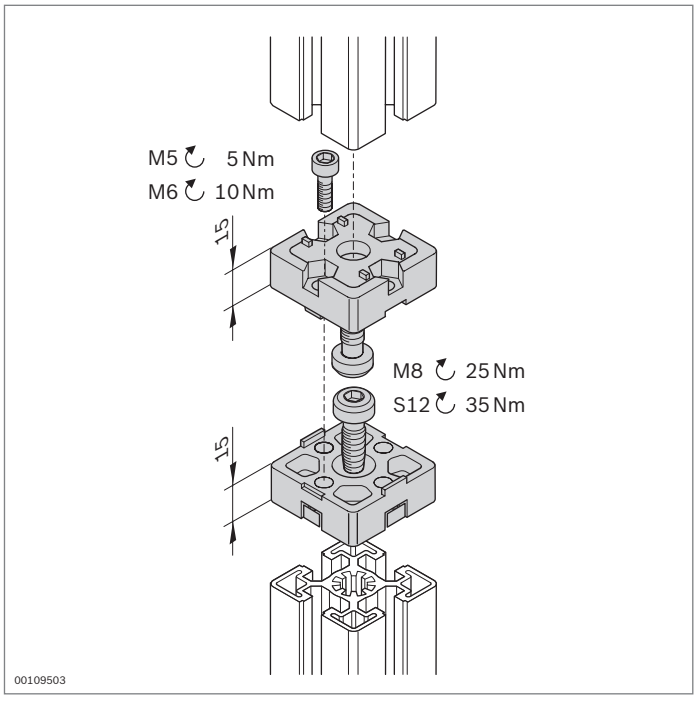

End connector

ESD 8 10 *designLINE*

- For end-to-end profile connections
- *designLINE* version with special silver paint (RAL 9006) for an attractive, high-quality design
- Profile finishing:
  - 30x30: M8 thread cutting in central bores
  - 40x40, 45x45, 50x50: Not required

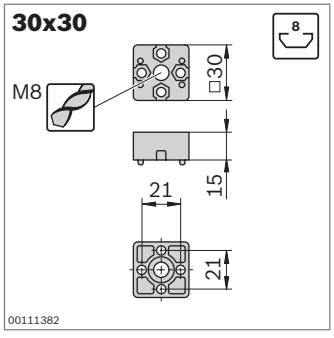

Type	M_{max}
30x30	81 Nm

FS1
DIN7984 M8x30

FS2
DIN 7984 M5x25
DIN 934 M5

End connector		Slot	ESD	No.	FS
30x30	Set (standard)	8	ESD	**3 842 526 003**	2xFS1, 4xFS2
	designLINE set	8	ESD	**3 842 538 656**	2xFS1, 4xFS2

Material: End connector: Diecast aluminum
designLINE end connector: painted (RAL 9006)
Fastening material: Steel; galvanized
Scope of delivery: Set incl. fastening material (FS)

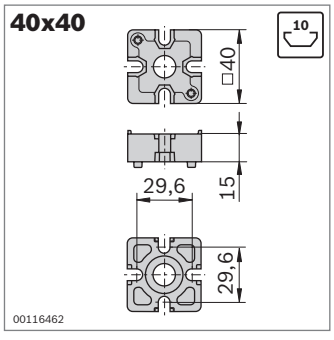

Type	M_{max}
40x40	170 Nm

FS3
S12x30

FS4
DIN 7984 M6x25
DIN 4032 M6

End connector		Slot	ESD	No.	FS
40x40	Set (standard)	10	ESD	**3 842 532 196**	2xFS3, 4xFS4
	designLINE set	10	ESD	**3 842 538 657**	2xFS3, 4xFS4

Material: End connector: Diecast aluminum
designLINE end connector: painted (RAL 9006)
Fastening material: Steel; galvanized
Scope of delivery: Set incl. fastening material (FS)

45x45

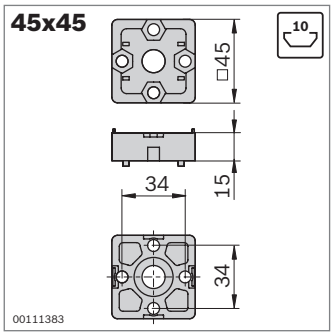

Type	M_{max}
45x45	200 Nm

FS3

FS4

End connector	Slot	ESD	No.	FS
45x45 Set (standard)	10		**3 842 191 175**	2xFS3, 4xFS4
designLINE set	10		**3 842 538 658**	2xFS3, 4xFS4

Material: End connector: Diecast zinc
designLINE end connector: painted (RAL 9006)
Fastening material: Steel; galvanized
Scope of delivery: Set incl. fastening material (FS)

50x50

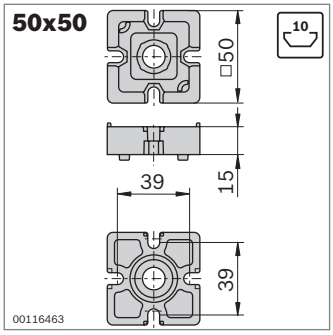

Type	M_{max}
50x50	180 Nm

FS3

FS4

End connector	Slot	ESD	No.	FS
50x50 Set (standard)	10		**3 842 532 199**	2xFS3, 4xFS4

Material: End connector: Diecast zinc
Fastening material: Steel; galvanized
Scope of delivery: Set incl. fastening material (FS)

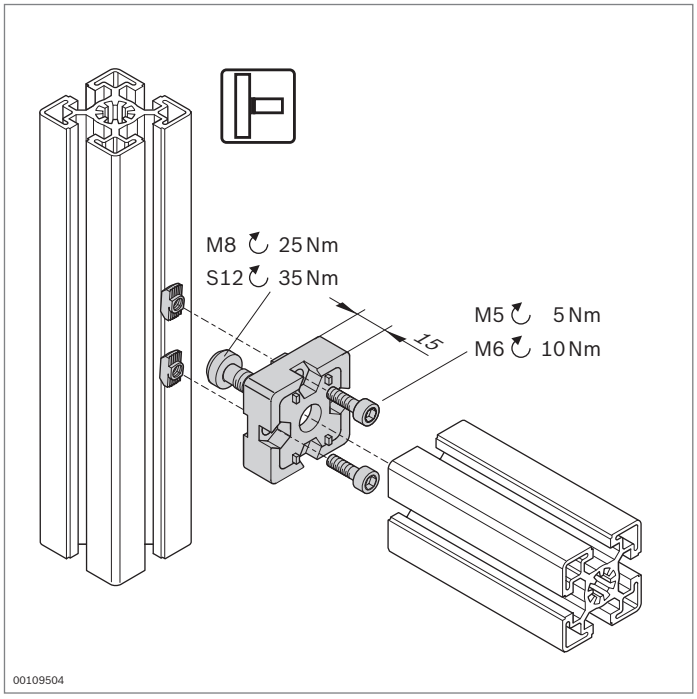

T-connector

designLINE

- For right-angled profile connections
- *designLINE* version with special silver paint (RAL 9006) for an attractive, high-quality design
- Profile finishing:
  - 30x30: M8 thread cutting in central bores
  - 40x40, 45x45, 50x50: Not required

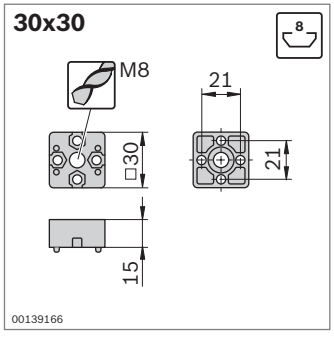

Type	Fmax	Mmax
30x30	4000 N	80 Nm

FS1



DIN7984
M8x30

FS2



DIN 7984
M5x16

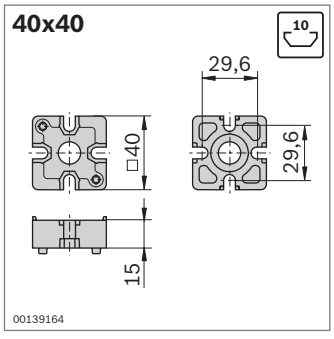

Type	Fmax	Mmax
40x40	9000 N	150 Nm

FS3



S12x30

FS4



DIN 7984
M6x20

T-connector		Slot	ESD	No.	FS
30x30	Set (standard)	8		**3 842 524 476**	1xFS1, 2xFS2
	designLINE set	8		**3 842 538 696**	1xFS1, 2xFS2

Material: T-connector: Diecast aluminum
designLINE T-connector: painted (RAL 9006)
Fastening material: Steel; galvanized
Scope of delivery: Set incl. fastening material (FS)

T-connector		Slot	ESD	No.	FS
40x40	Set (standard)	10		**3 842 532 195**	1xFS3, 2xFS4
	designLINE set	10		**3 842 538 697**	1xFS3, 2xFS4

Material: T-connector: Diecast aluminum
designLINE T-connector: painted (RAL 9006)
Fastening material: Steel; galvanized
Scope of delivery: Set incl. fastening material (FS)

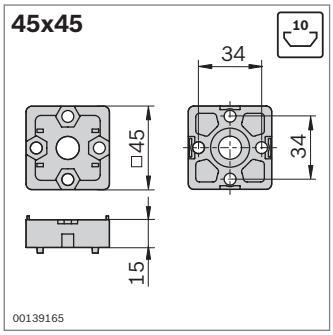

Type	F_{max}	M_{max}
45x45	9000 N	200 Nm

FS3



FS4

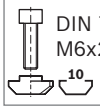

T-connector		Slot	ESD	No.	FS
45x45	Set (standard)	10		**3 842 520 802**	1xFS3, 2xFS4
	designLINE set	10		**3 842 538 698**	1xFS3, 2xFS4

Material: T-connector: Diecast zinc
designLINE T-connector: painted (RAL 9006)
Fastening material: Steel; galvanized

Scope of delivery: Set incl. fastening material (FS)

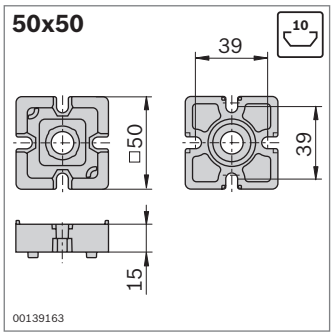

Type	F_{max}	M_{max}
50x50	10000 N	170 Nm

FS3



FS4

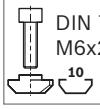

T-connector		Slot	ESD	No.	FS
50x50	Set (standard)	10		**3 842 532 198**	1xFS3, 2xFS4

Material: T-connector: Diecast zinc
Fastening material: Steel; galvanized

Scope of delivery: Set incl. fastening material (FS)

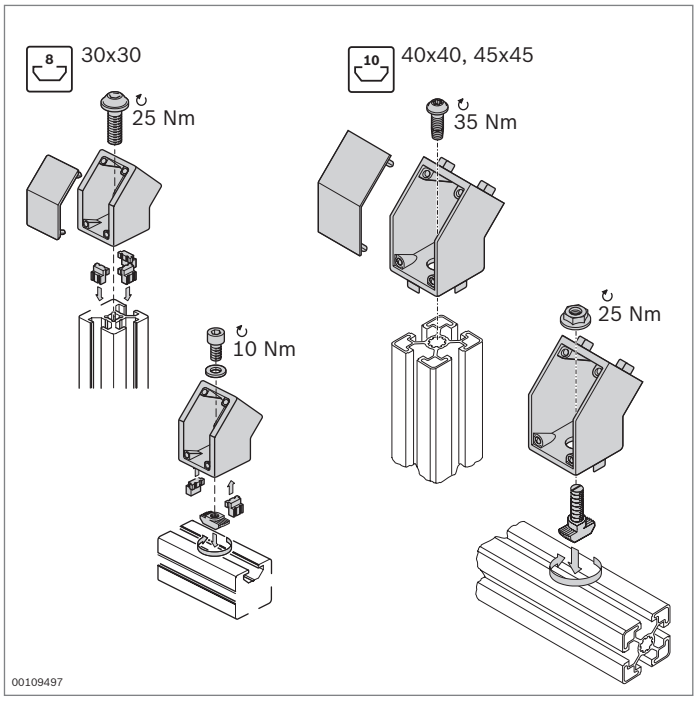

Connector 45°

designLINE

- For connecting profiles at an angle of less than 45°
- Suitable for reinforcing frames
- Suitable for connections at the end-face or in the profile slot
- Connectors 45° 40x40 and 45x45 with centering lugs for easy positioning (centering lugs can simply be broken off for installation in the profile slot)
- *designLINE* version with special silver paint (RAL 9006) for an attractive, high-quality design
- Profile finishing: Not required

* Connector 45° creates conductive connection, but the cover caps included in the set are not ESD-compatible.

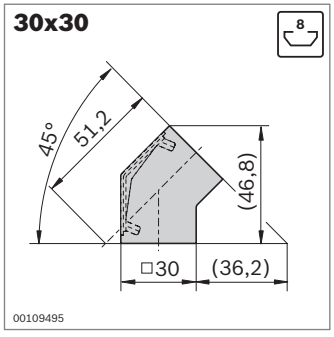

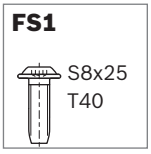

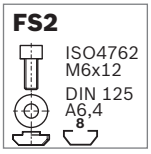

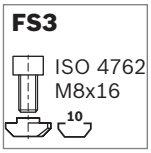

Connector 45°		Color	Slot	ESD	No.	FS
30x30	Set (standard)	Signal gray	8	*	**3 842 554 446**	2xFS1, FS2, FS3
		Black	8		**3 842 554 447**	
	Set *designLINE*	Signal gray	8	*	**3 842 554 452**	2xFS1, FS2, FS3
		Black	8		**3 842 554 453**	

Material: Connector 45°: Diecast zinc; connector 45° *designLINE*: painted (RAL 9006); centering piece, cover cap: PP; fastening material: Steel; galvanized
Scope of delivery: Set incl. fastening material (FS), 6 x centering piece, cover cap

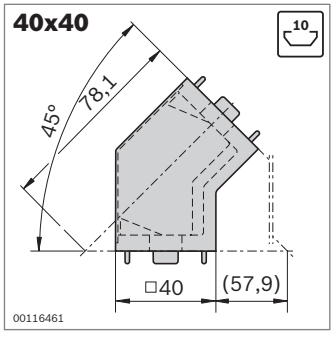

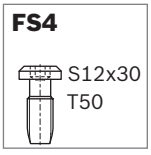

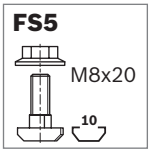

Connector 45°		Color	Slot	ESD	No.	FS
40x40	Set (standard)	Signal gray	10	*	**3 842 554 448**	2xFS4, FS5
		Black	10		**3 842 554 449**	
	Set *designLINE*	Signal gray	10	*	**3 842 554 454**	2xFS4, FS5
		Black	10		**3 842 554 455**	

Material: Connector 45°: Cast aluminum; connector 45° *designLINE*: painted (RAL 9006); centering piece, cover cap: PP; fastening material: Steel; galvanized
Scope of delivery: Set incl. fastening material (FS), cover cap

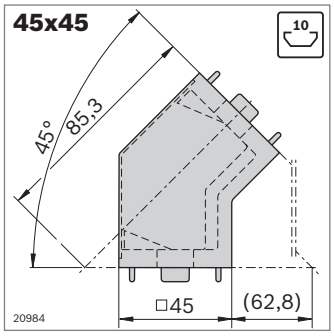

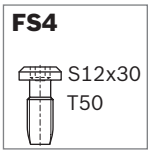

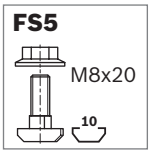

Connector 45°		Color	Slot	ESD	No.	FS
45x45	Set (standard)	Signal gray	10	*	**3 842 554 450**	2xFS4, FS5
		Black	10		**3 842 554 451**	
	Set *designLINE*	Signal gray	10	*	**3 842 554 456**	2xFS4, FS5
		Black	10		**3 842 554 457**	

Material: Connector 45°: Cast aluminum; connector 45° *designLINE*: painted (RAL 9006); centering piece, cover cap: PP; fastening material: Steel; galvanized
Scope of delivery: Set incl. fastening material (FS), cover cap

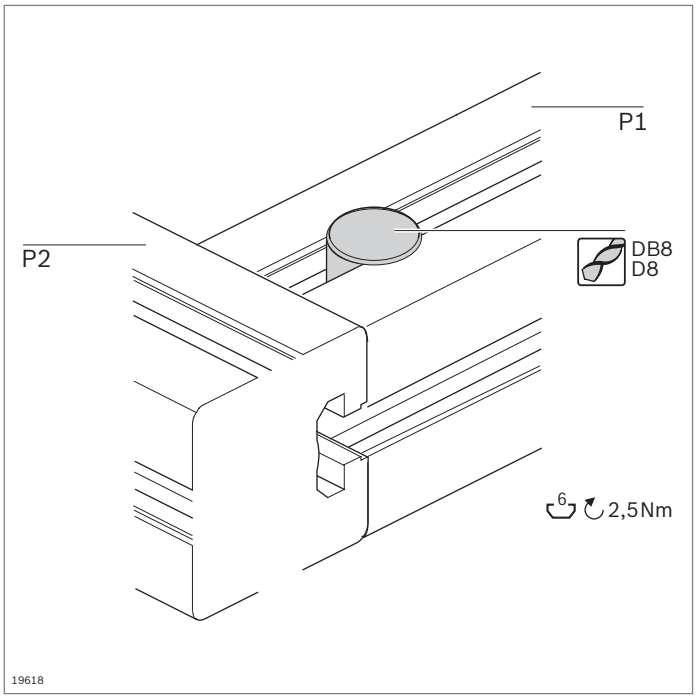

Quick connector, 6 mm slot, 0°, 90°
Cover cap

- For the right-angled connecting of two profiles
- Excellent accessibility for tools during mounting
- Quick connector for 6 mm slot with square head; can be used as a 0° or 90° connector
- Profile finishing:
  Blind hole DB8 or through-hole D8

Optional accessories:
Drilling jig (p. 14-2)

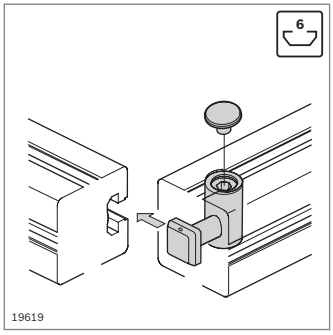

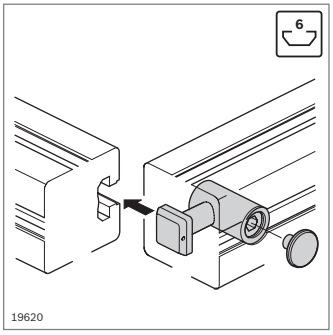

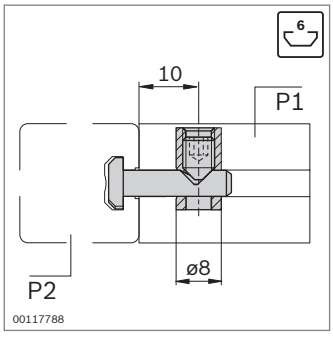

Slot	F_{max}	M_{max}
6 / 6	450 N	18 Nm

Quick connector 0° / 90°	P1 / P2	D (mm)	ESD		No.
	6 / 6	8		10	**3 842 537 013**

Material: Steel; stainless

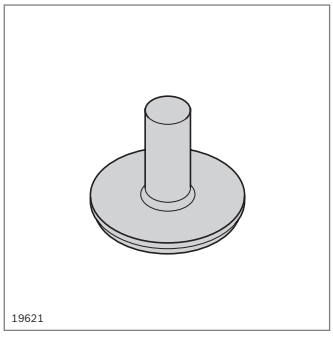

- Cover cap for connector sleeves

Cover cap	D (mm)		No.
	8	100	**3 842 551 038**

Material: PE; signal gray RAL 7004

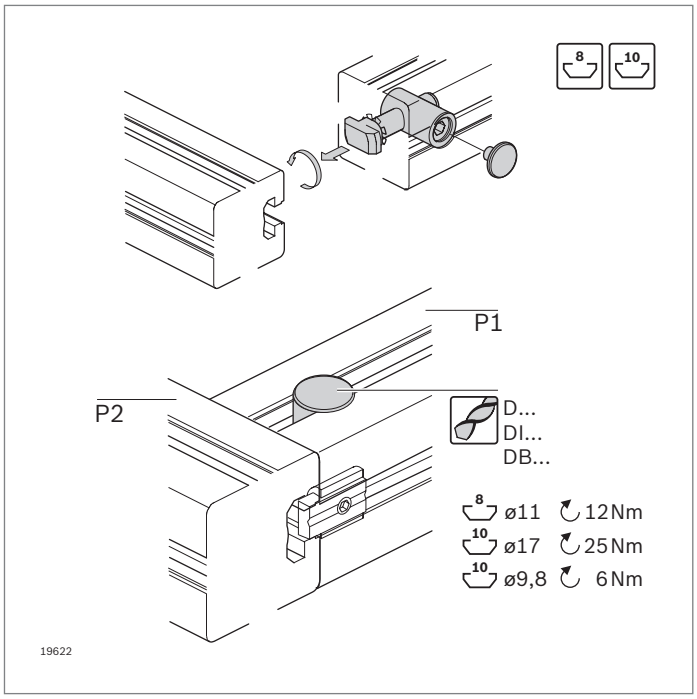

Quick connector, 8/10 mm slot, 0°

- For the right-angled connecting of two profiles
- Excellent accessibility for tools during mounting
- O-ring for fixing allows overhead assembly
- Quick connectors can be pivoted into the profile slot at the mounting location
- Profile finishing:
  Blind hole DI, DB11, DB17 or
  Through-hole DI, D11, D17
- Note differing drilling intervals and load-bearing capacities when using with radial compensation (“Technical data” p. 18-16)

Optional accessories:

- Anti-torsion element (p. 3-42)
- Radial compensation (p. 2-85)
- Drilling jig (p. 14-2)
- Cover cap (p. 3-54)

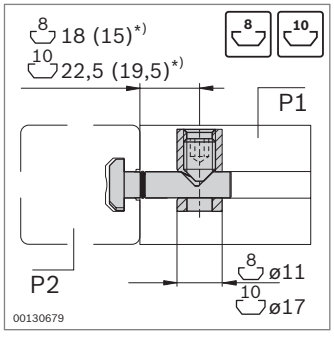

Slot	F_{max}	M_{max}
8 / 8	500 N	40 Nm
8 / 10	2000 N	70 Nm
10 / 10	4000 N	140 Nm

*) With the use of a radial compensation

Quick connector 0°	P1 / P2 (mm)	D ESD		No.
Steel; galvanized	8 / 8	11	10	**3 842 535 459**
	8 / 10	11	10	**3 842 535 464**
	10 / 10	17	10	**3 842 535 458**
Steel; stainless	8 / 8	11	10	**3 842 548 934**
	8 / 10	11	10	**3 842 548 935**
	10 / 10	17	10	**3 842 548 936**

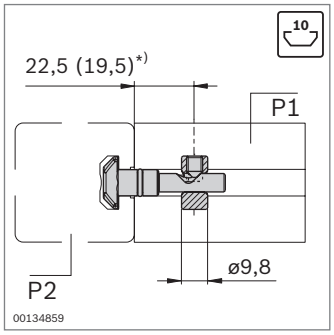

Slot	F_{max}	M_{max}
10 / 10	800 N	50 Nm

*) With the use of a radial compensation

- Quick connector 9.8 with smaller connector sleeve
- The hole for the connector sleeve does not make contact with the slot flanks. This permits a visually attractive connection; the slot can be completely closed with the cover profile

Quick connector 0°, connector sleeve D = 9.8	P1 / P2 (mm)	D ESD		No.
Steel; galvanized	10 / 10	9.8[1)]	10	**3 842 541 412**

[1)] No standard hole in modular dimensions 40, 50 and 60
Target distance from profile end: 22.5 mm

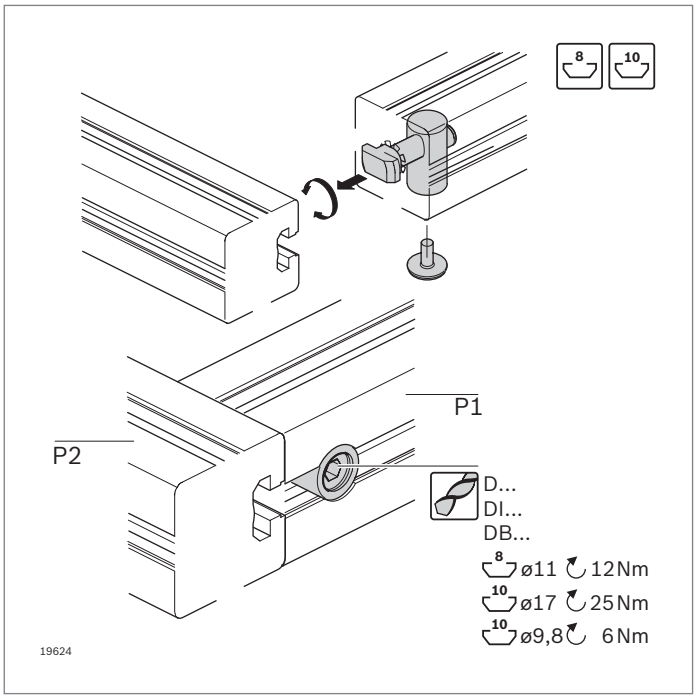

Quick connector, 8/10 mm slot, 90° Cover cap

- Tie rod head rotated at a 90° angle to the connector sleeve
- Profile finishing:
  Blind hole DI, DB11, DB17 or
  Through-hole DI, D11, D17

Optional accessories:

- Anti-torsion element (p. 3-42)
- Radial compensation (p. 2-85)
- Drilling jig (p. 14-2)
- Cover cap

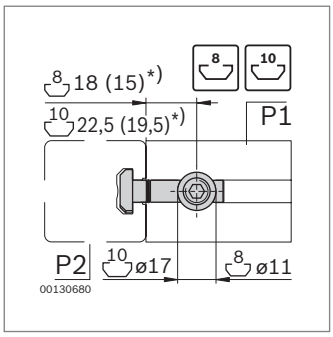

Slot	F_{max}	M_{max}
8 / 8	500 N	40 Nm
10 / 10	4000 N	140 Nm

*) With the use of a radial compensation

Quick connector 90°	P1 / P2	D ESD (mm)		No.
Steel; galvanized	8 / 8	11	10	**3 842 535 465**
	10 / 10	17	10	**3 842 535 466**
Steel; stainless	8 / 8	11	10	**3 842 548 937**
	10 / 10	17	10	**3 842 548 938**

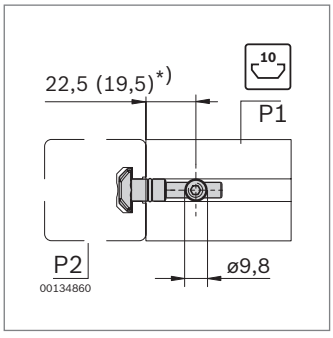

Slot	F_{max}	M_{max}
10 / 10	800 N	50 Nm

*) With the use of a radial compensation

Quick connector 90°, connector sleeve D = 9.8	P1 / P2	D ESD (mm)		No.
Steel; galvanized	10 / 10	9.8[1)]	10	**3 842 541 410**

1) No standard hole in modular dimensions 40, 50 and 60
Target distance from profile end: 22.5 mm

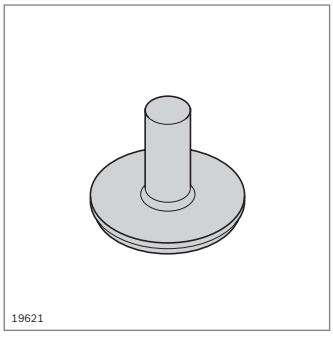

Cover cap	D (mm)		No.
	11	100	**3 842 551 040**
	17	100	**3 842 551 042**

Material: PE; signal gray RAL 7004

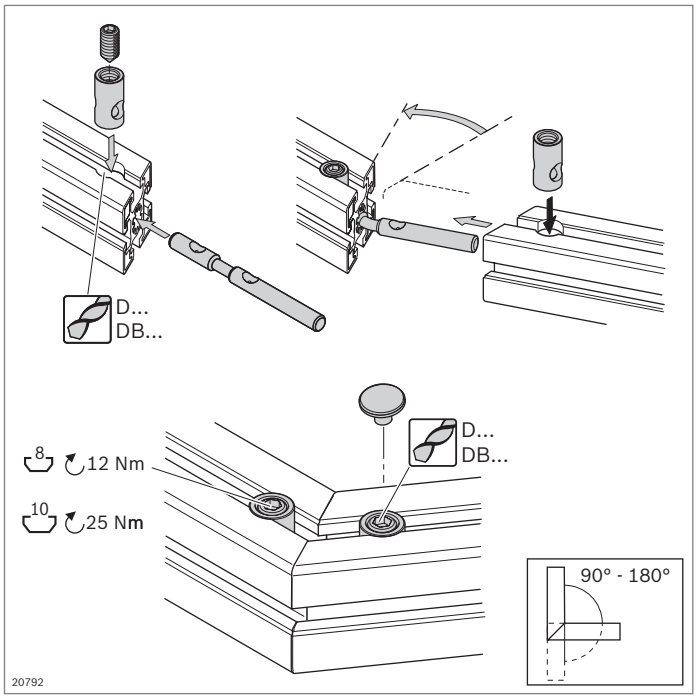

Quick connector, bendable – end-to-end

- For end-to-end connecting of two profiles with equal cross-sections and at any angle, e.g. for frames
- Profile finishing:
  - Blind hole DB11, DB17 or through-hole D11, D17
  - Miter cut

Technical data (p. 18-16)

Accessories:

- Drilling jig (p. 14-2)
- Cover cap (p. 3-54)

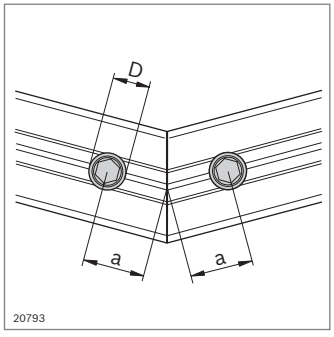

Profile	M_{max}
30x30	24 Nm
40x40L	100 Nm
45x45L	110 Nm
45x45	145 Nm
50x50L	160 Nm

Quick connector, bendable	P1 / P2	a (mm)	D (mm)	ESD		No.
End-to-end	8 / 8	18	11	✓	10	**3 842 535 630**
	10 / 10	22.5	17	✓	10	**3 842 535 634**

Material: Tie rod: Steel; stainless
Socket: Steel; galvanized

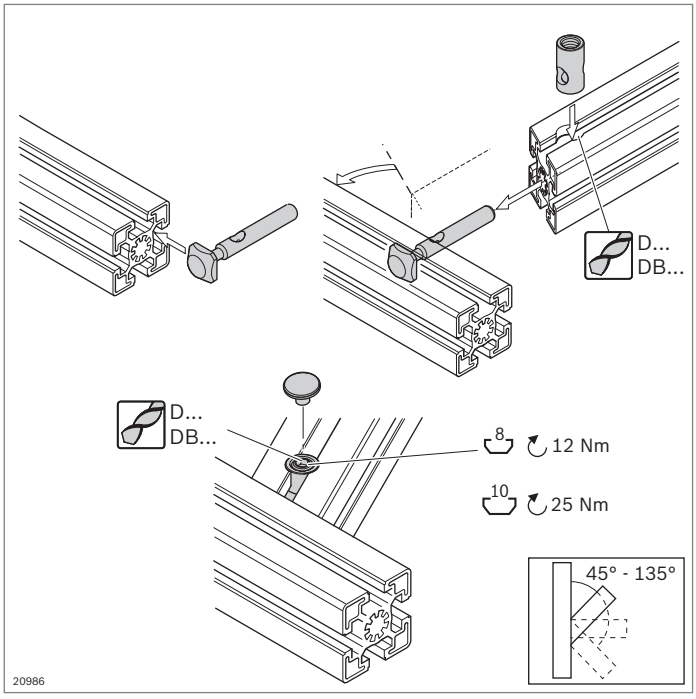

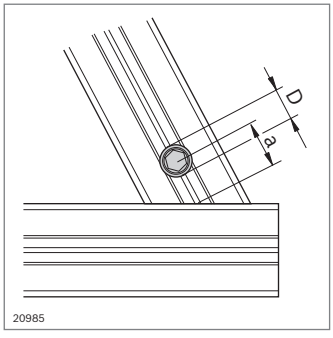

Profile	F_{max}	M_{max}	F_{max}	M_{max}
30x30	1100 N	35 Nm	650 N	40 Nm
40x40L	1500 N	110 Nm	1000 N	80 Nm
45x45L	1500 N	120 Nm	1000 N	95 Nm
45x45	1500 N	140 Nm	1100 N	180 Nm
50x50L	1500 N	150 Nm	1100 N	180 Nm

Quick connector, bendable – end-to-slot



- For end-to-slot connecting of two profiles at any angle, e.g. for framework constructions
- Profile finishing:
  - Blind hole DB11, DB17 or through-hole D11, D17
  - Miter cut

Technical data (p. 18-16)

Accessories:
- Drilling jig (p. 14-2)
- Cover cap (p. 3-54)

Quick connector, bendable	P1 / P2	a (mm)	D (mm)	ESD		No.
End-to-slot	8 / 8	18	11	ESD	10	**3 842 535 629**
	10 / 10	22.5	17	ESD	10	**3 842 535 635**

Material: Tie rod: Steel; stainless
Socket: Steel; galvanized

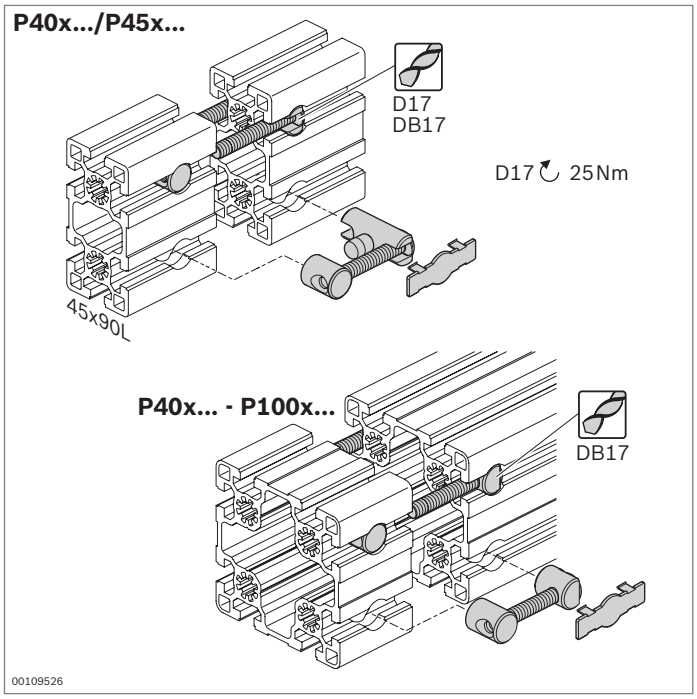

Longitudinal end connector

- For the end-to-end connecting of two profiles
- Standard profile finishing:
  - Through-hole D17 (longitudinal end connector on both sides)
  - Blind hole DB17 or through-hole D17 (longitudinal end connector on one side)

Optional accessories:
Cover cap D17 x 44.6; ESD (p. 3-61)

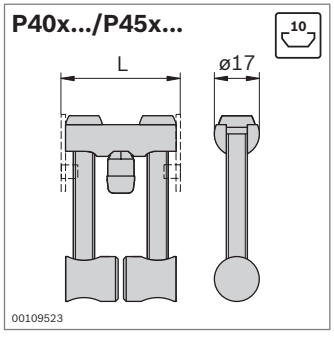

Longitudinal end connector, two-sided	L (mm)	ESD	No.
Profile 40x...	40	*	**3 842 554 442**
Profile 45x...	45	*	**3 842 554 440**

Material: Longitudinal end connector: screw steel; galvanized
Centering pin, cover caps: PP, signal gray
Scope of delivery: Incl. 4 x cover cap
* Longitudinal end connector establishes conductive connection. Cover caps included in the set are not ESD-compatible.

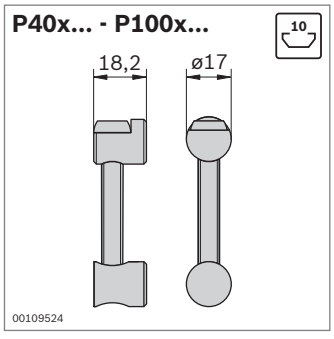

Longitudinal end connector, one-sided	ESD	No.
Profile 40x... – 100x...	*	**3 842 554 444**

Material: Longitudinal end connector: screw steel; galvanized
Centering pin, cover caps: PP, signal gray
Scope of delivery: Incl. 2 x cover cap
* Longitudinal end connector establishes conductive connection. Cover caps included in the set are not ESD-compatible.

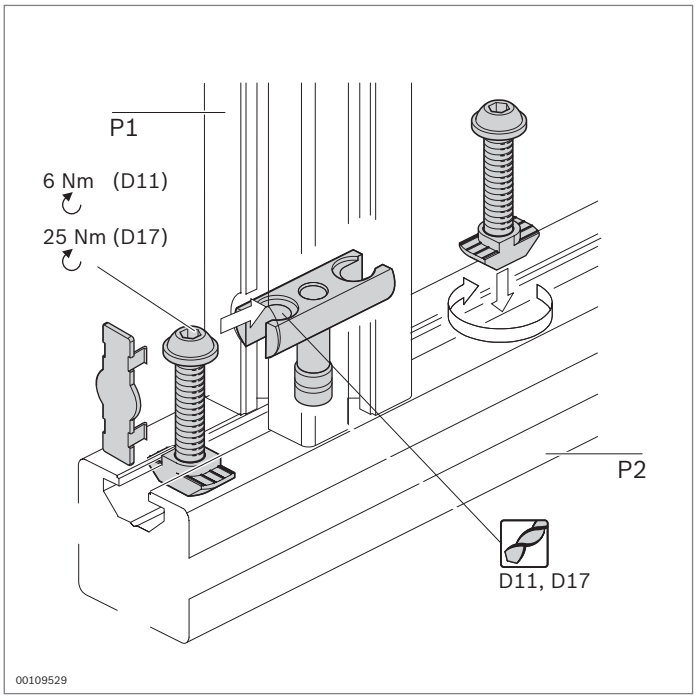

Bolt connector

- For the right-angled connecting of two profiles
- Suitable for heavy loads, including torsional loads
- Can be mounted in closed frames
- Profile finishing: Through-hole D11, D17

Technical data (p. 18-17)

Accessories:
Drilling jig (p. 14-2)

Optional accessories:
Cover cap ESD (p. 3-61)

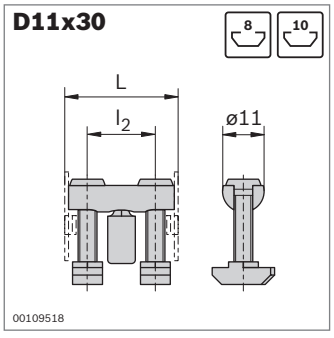

Size	F_{max}	M_{max}	M_{max}
30	2500 N	60 Nm	20 Nm

Bolt connector	P1 / P2	L (mm)	l_2 (mm)	ESD		No.
D11x30	8 / 8	30	18	*	10	**3 842 554 402**
	8 / 10	30	18	*	10	**3 842 555 590**

Material: Bolt connector: Steel; galvanized
Centering pin, cover caps: PP, signal gray
* Bolt connector creates conductive connection, but the cover caps included in the set are not ESD-compatible.

Scope of delivery: Incl. 2 x cover cap

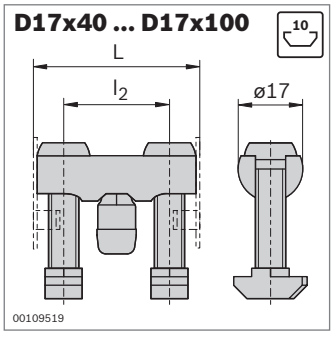

Size	F_{max}	M_{max}	M_{max}
40	4000 N	180 Nm	40 Nm
45	4000 N	180 Nm	60 Nm
50	4000 N	200 Nm	65 Nm
60	4000 N	200 Nm	80 Nm
80	5000 N	800 Nm	170 Nm
90	5000 N	800 Nm	200 Nm
100	5000 N	1000 Nm	480 Nm

Bolt connector	P1 / P2	L (mm)	l_2 (mm)	ESD		No.
D17x40	10 / 10	40	23	*	10	**3 842 555 594**
D17x45	10 / 10	45	28	*	10	**3 842 555 584**
D17x50	10 / 10	50	33	*	10	**3 842 555 596**
D17x60	10 / 10	60	43	*	10	**3 842 555 586**
D17x80	10 / 10	80	63	*	10	**3 842 555 598**
D17x90	10 / 10	90	73	*	10	**3 842 555 588**
D17x100	10 / 10	100	83	*	10	**3 842 555 592**

Material: Bolt connector: Steel; galvanized
Centering pin, cover caps: PP, signal gray
* Bolt connector creates conductive connection, but the cover caps included in the set are not ESD-compatible.

Scope of delivery: Incl. 2 x cover cap

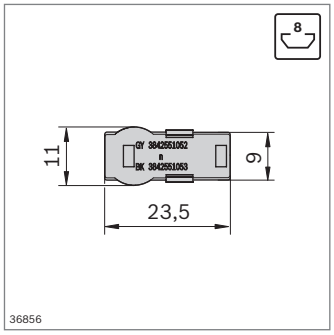

Cover cap	Color	ESD		No.
D11 x 23.5	Signal gray		100	**3 842 551 052**
D11 x 23.5	Black	ESD	100	**3 842 551 053**
Material:	PP			

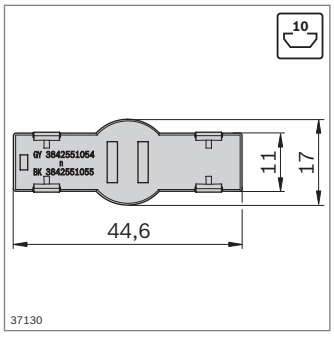

Cover cap	Color	ESD		No.
D17 x 44.6	Signal gray		100	**3 842 551 054**
D17 x 44.6	Black	ESD	100	**3 842 551 055**
Material:	PP			

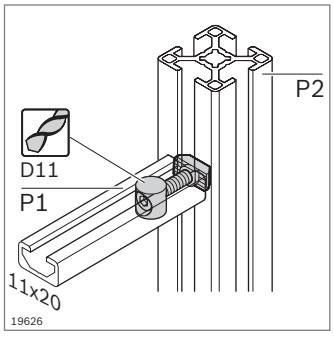

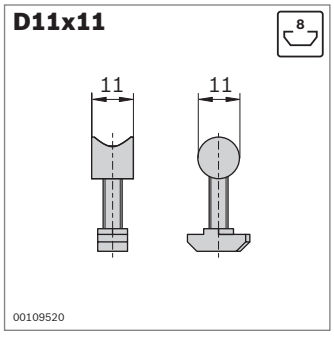

Bolt connector		P1 / P2	ESD		No.
D11x11		8 / 8	ESD	10	**3 842 535 617**
Material:	Steel; galvanized				

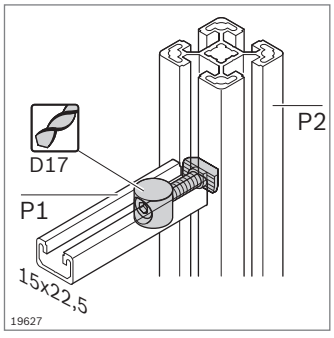

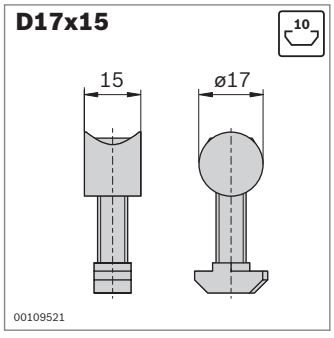

Bolt connector		P1 / P2	ESD		No.
D17x15		10 / 10	ESD	10	**3 842 535 619**
Material:	Steel; galvanized				

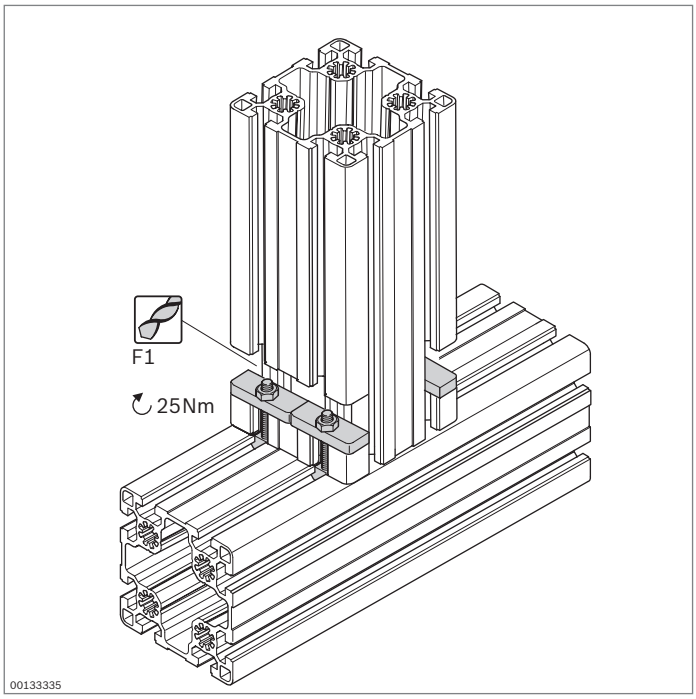

QV mounting kit



- For the right-angled connecting of two profiles
- Excellent accessibility for tools during mounting
- Profile finishing: Standard milling F1
- Bending moments must be avoided

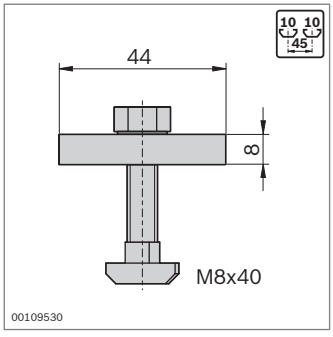

Slot	F_{max}
10	1000 N

QV mounting kit		No.
	10	**3 842 146 972**
Material:	Steel; galvanized	

Joints



Joint 45x45 lockable
(p. 4-2)

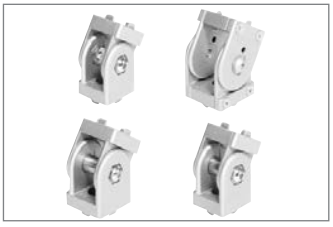

Joints (p. 4-4)



Swivel bearing (p. 4-9)



Supporting arm joint
(p. 4-10)

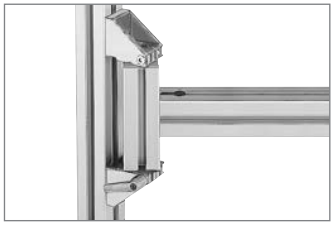

Bearing pedestal (p. 4-11)

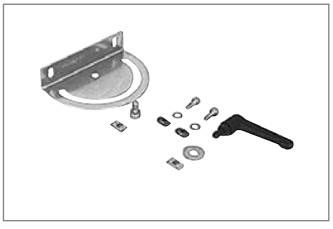

Swivel mounting (p. 4-12)



Clamping lever, star knob
(p. 4-13)

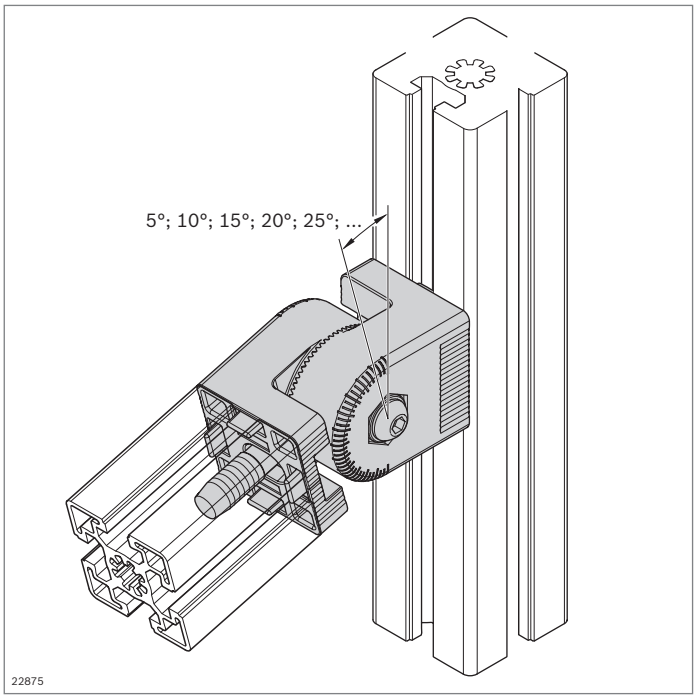

Joint 45x45 lockable



- For adjustable or rigid profile connections
- For high loads up to 100 Nm in the swivel direction
- Form fit thanks to Hirth teething
- Swivel range 180°
- Easy adjustment in the 5° modular dimensions
- Marking with a 5° graduation for easy detection of the adjustment angle
- Clamping and convenient adjustment of joint using a clamping lever or screw
- Profile finishing:
  Not required (self-cutting screw for end face to end face connections)
- Compatible with joint 45x45 and joint 45x45 support (p. 4-5)

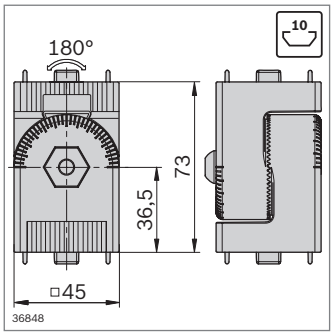

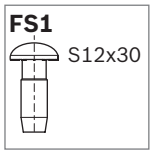

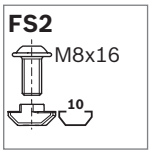

Joint 45x45 lockable	Slot	ESD	No.	FS
	10		**3 842 546 564**	2xFS1, 2xFS2

Material:	Diecast zinc Fastening material: Steel; galvanized
Scope of delivery:	Incl. fastening material (FS)

Clamping lever M8x45	No.
For joint 45x45 lockable	**3 842 538 607**

Material: Diecast zinc, black polymer coating

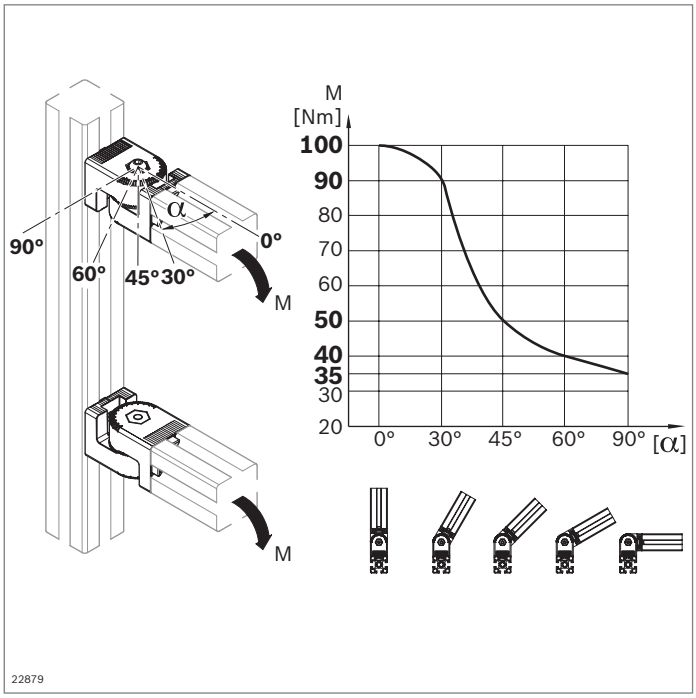

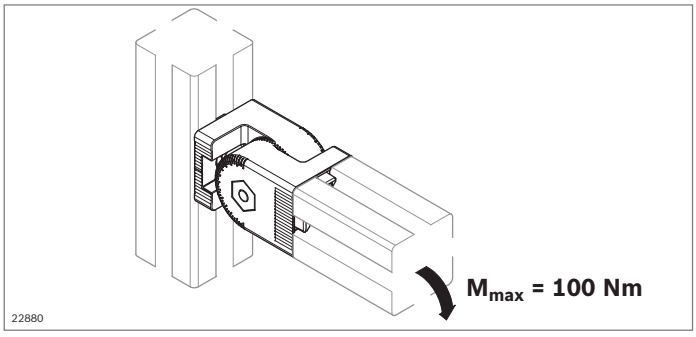

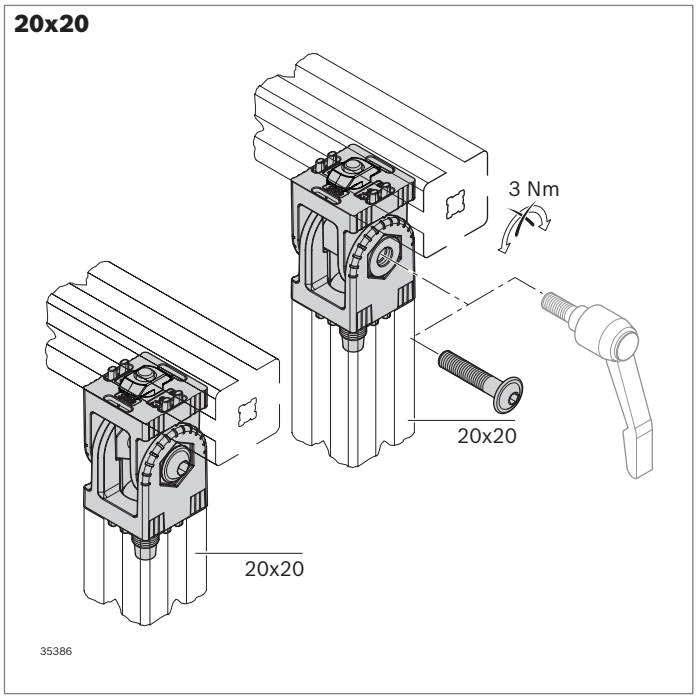

Joint 20x20

designLINE

- For movable or rigid profile connections at any angle
- Swivel range 180°
- With a 15° graduation
- Clamping (3 Nm) and convenient adjustment of joint using a clamping lever (M4x20)
- *designLINE* version with special silver paint (RAL 9006) for an attractive, high-quality design
- Two different assembly versions (normal and support) available under the same order number

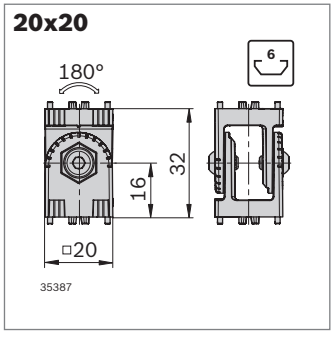

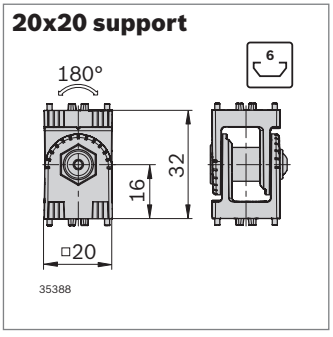

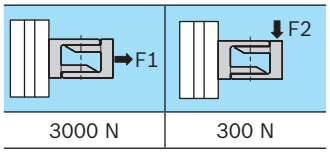

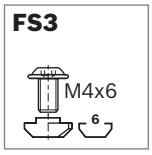



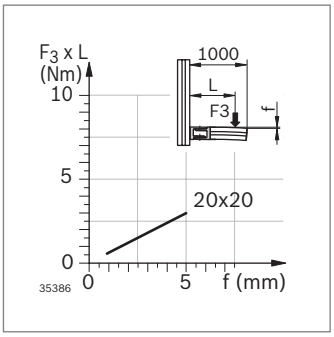

Joint 20x20	Slot	ESD	No.	FS
Standard	6		**3 842 555 659**	2xFS3, 2xFS4
designLINE	6		**3 842 555 665**	2xFS3, 2xFS4

Material:	Standard: Diecast aluminum *designLINE*: painted, RAL 9006 Fastening material: Steel; galvanized
Scope of delivery:	Incl. fastening material (FS)

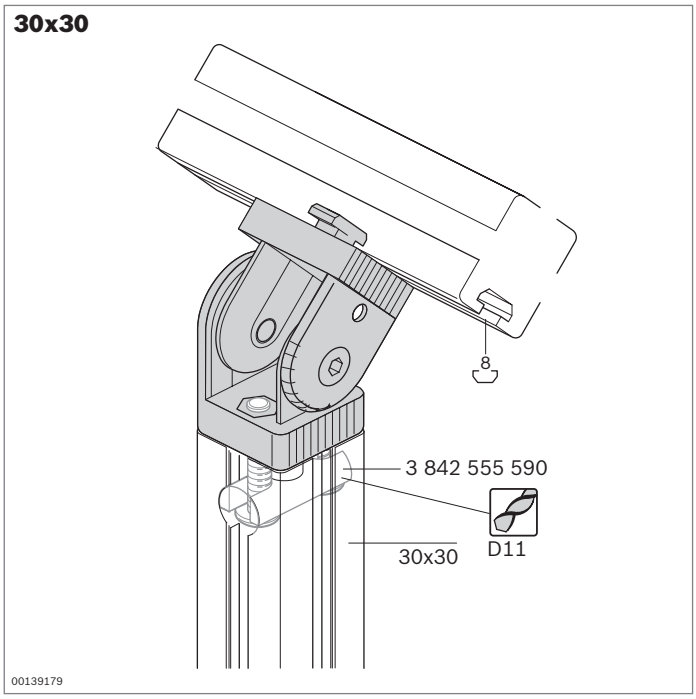

Joint 30x30

designLINE

- For movable or rigid profile connections at any angle
- Swivel range 182°
- With a 15° graduation
- Locking by clamping (5 Nm) or fixing with pins (15 Nm)
- *designLINE* version with special silver paint (RAL 9006) for an attractive, high-quality design
- Profile finishing:
  Through-hole D11 for end face profile connections

Required accessories:
Bolt connector D11 for end face connections

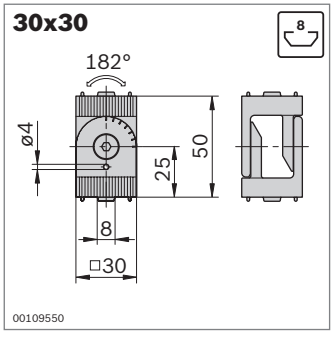

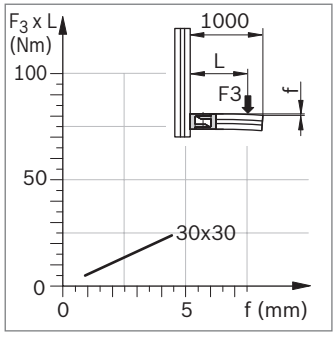





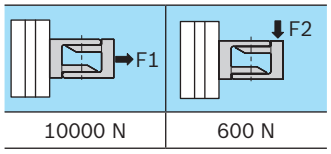

Joint 30x30	Slot	ESD	No.	FS
Standard	8		**3 842 502 683**	2xFS1, 4xFS2
designLINE	8		**3 842 538 683**	2xFS1, 4xFS2

Material:	Standard: Diecast zinc *designLINE*: painted, RAL 9006 Fastening material: Steel; galvanized
Scope of delivery:	Incl. fastening material (FS)

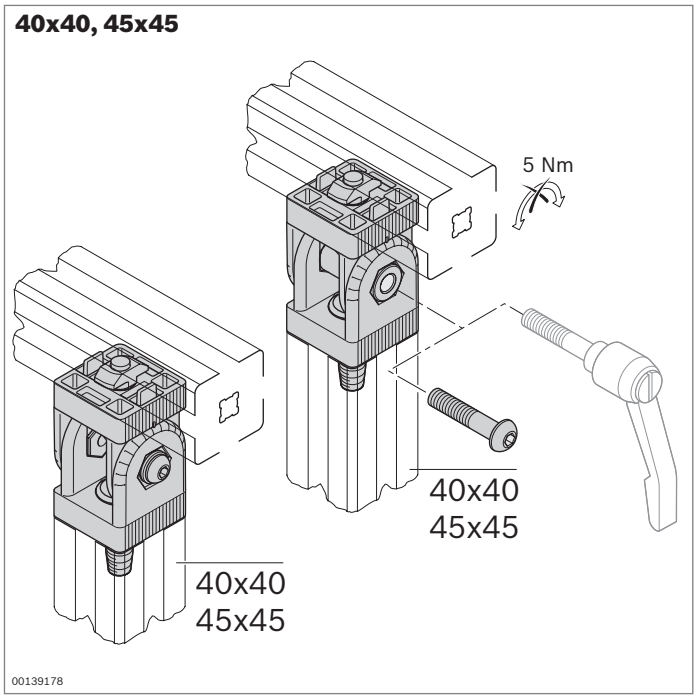

Join 40x40, 40x40 support, 45x45, 45x45 support

designLINE

- For movable or rigid profile connections at any angle
- Swivel range 180°
- With a 15° graduation
- Clamping and convenient adjustment of “support” joint using a clamping lever (5 Nm)
- *designLINE* version with special silver paint (RAL 9006) for an attractive, high-quality design

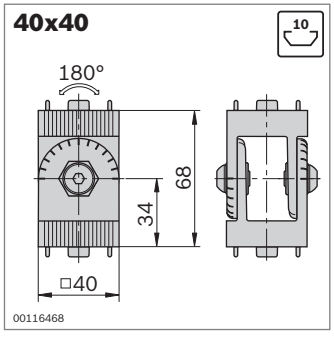

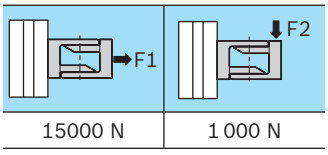

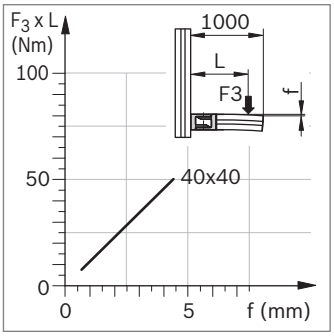

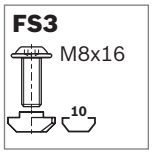



Joint 40x40	Slot	ESD	No.	FS
Standard	10		**3 842 543 401**	2xFS3, 2xFS4
designLINE	10		**3 842 538 684**	2xFS3, 2xFS4

Material: Standard: Diecast aluminum
designLINE: painted, RAL 9006
Fastening material: Steel; galvanized
Scope of delivery: Incl. fastening material (FS)

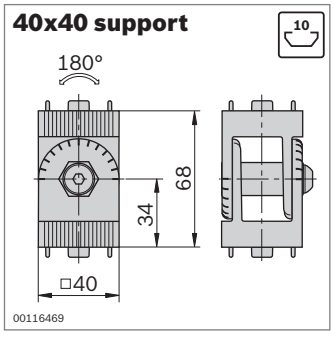

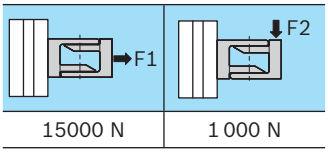

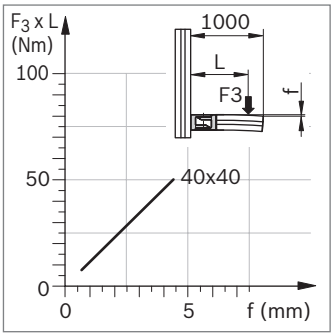

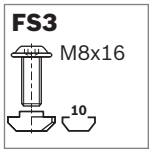

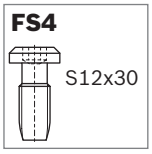

Joint 40x40 support	Slot	ESD	No.	FS
Standard	10		**3 842 543 402**	2xFS3, 2xFS4
designLINE	10		**3 842 538 685**	2xFS3, 2xFS4

Material: Standard: Diecast aluminum
designLINE: painted, RAL 9006
Fastening material: Steel; galvanized
Scope of delivery: Incl. fastening material (FS)

Clamping lever M8x40	No.
For joint 40x40 support	**3 842 516 847**

Material: Diecast zinc, black polymer coating

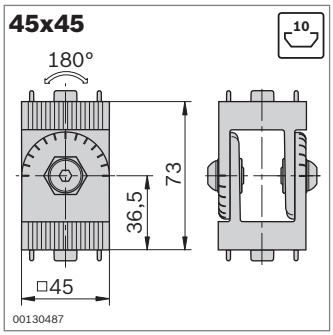

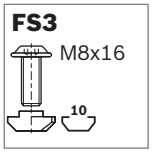

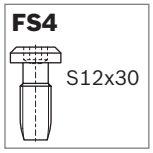

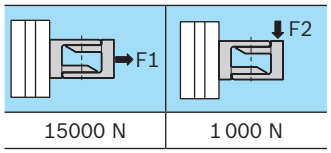

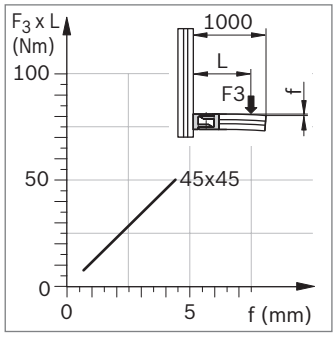

Joint 45x45	Slot	ESD	No.	FS
Standard	10		**3 842 543 403**	2xFS3, 2xFS4
designLINE	10		**3 842 538 686**	2xFS3, 2xFS4

Material: Standard: Diecast aluminum
designLINE: painted, RAL 9006
Fastening material: Steel; galvanized
Scope of delivery: Incl. fastening material (FS)

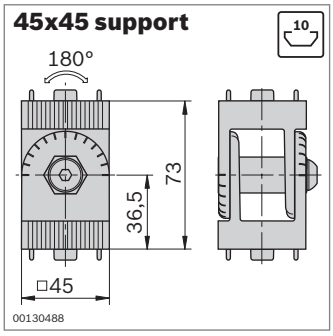

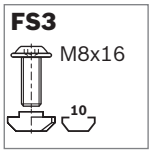

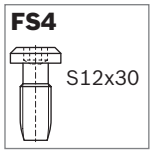

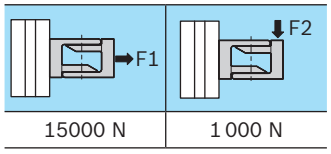

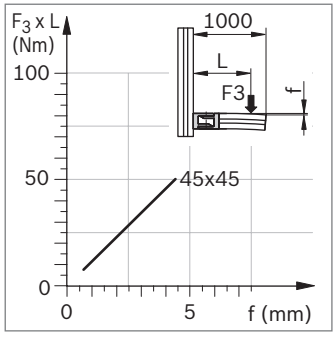

Joint 45x45 support	Slot	ESD	No.	FS
Standard	10		**3 842 543 404**	2xFS3, 2xFS4
designLINE	10		**3 842 538 687**	2xFS3, 2xFS4

Material: Standard: Diecast aluminum
designLINE: painted, RAL 9006
Fastening material: Steel; galvanized
Scope of delivery: Incl. fastening material (FS)

Clamping lever M8x45	No.
For joint 45x45 support	**3 842 538 607**

Material: Diecast zinc, black polymer coating

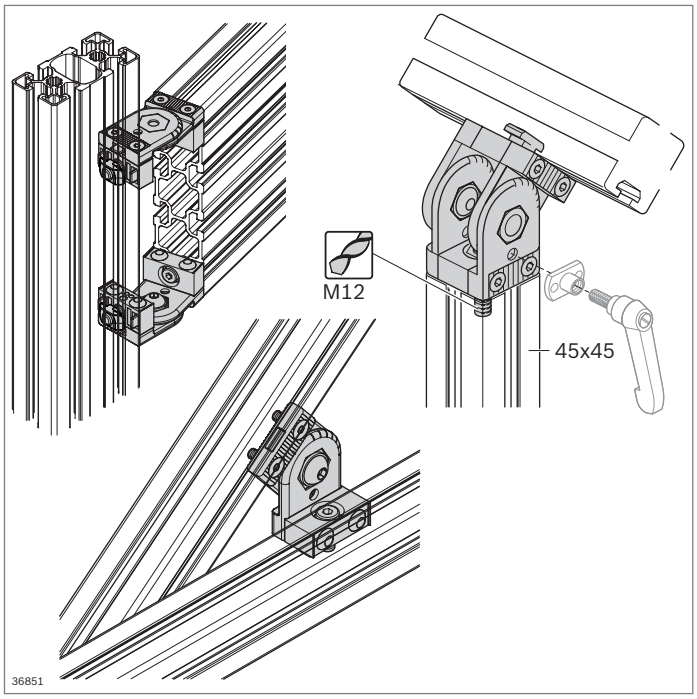

Joint 45x45



- For movable or rigid profile connections at any angle
- Swivel range 182°
- With a 15° graduation

4

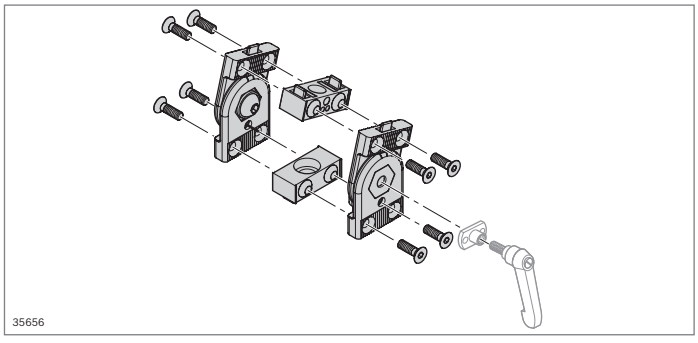

Joint 45x45	Slot	ESD	No.	FS
Standard	10		**3 842 502 684**	2xFS1, 2xFS2

Material: Standard: Diecast zinc
Fastening material: Steel; galvanized
Scope of delivery: Incl. fastening material (FS)

Clamping lever M5x10	ESD	No.
For joint 45x45		**3 842 505 144**

Material: Diecast zinc, black polymer coating

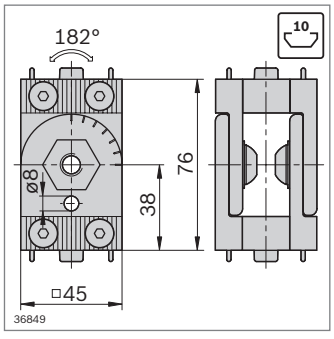

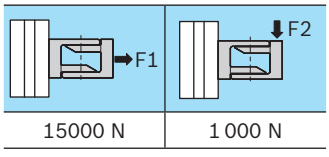

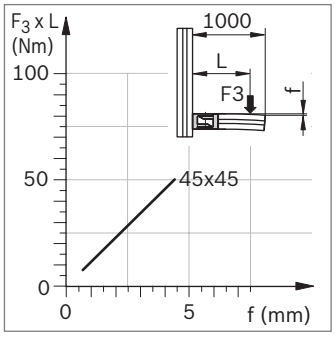

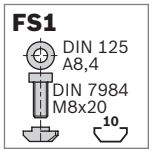



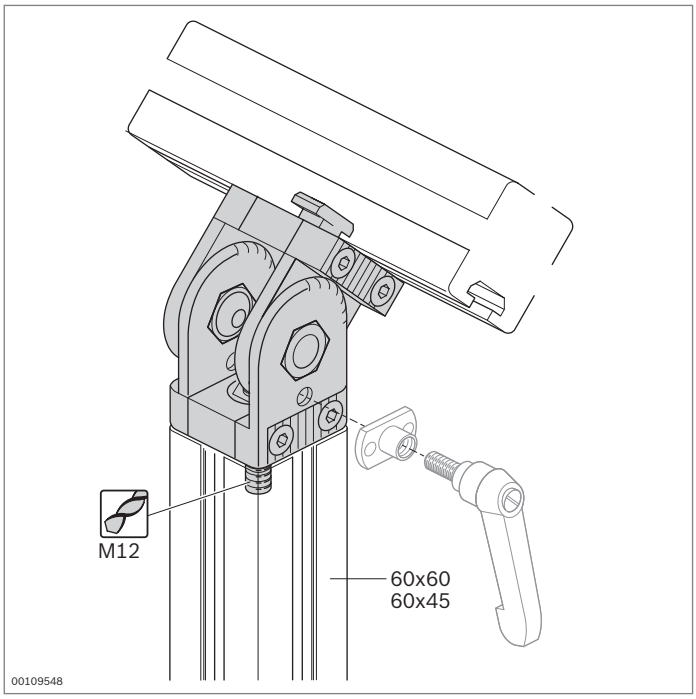

Joint 60x45, 60x60

designLINE

- For movable or rigid profile connections at any angle
- Swivel range 182°
- With a 15° graduation
- Locking by clamping (5 Nm) or fixing with pins (15 Nm)
- The joint can be adjusted using a clamping lever
- *designLINE* version with special silver paint (RAL 9006)
- Profile finishing:
  Thread (M12) in central bore for end connection

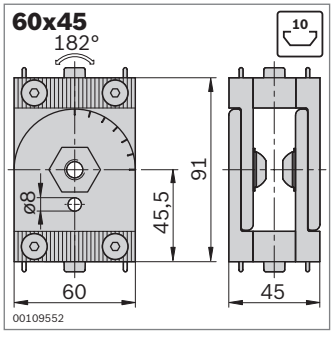

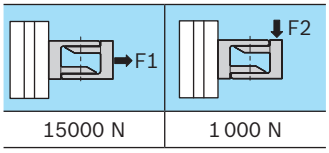

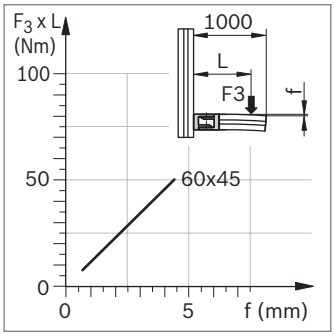

FS5
DIN 7984 M12x40
DIN 125 A8,4

FS6
DIN 7984 M8x20

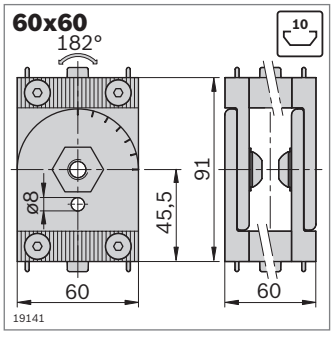

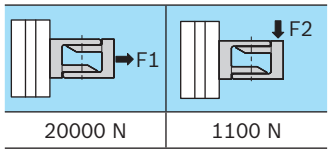

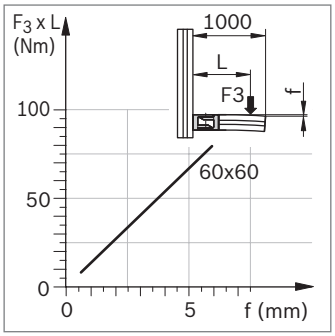

FS5
DIN 7984 M12x40
DIN 125 A8,4

FS6
DIN 7984 M8x20

Joint 60x45	Slot	ESD	No.	FS
Standard	10		**3 842 502 688**	2xFS5, 2xFS6
designLINE	10		**3 842 539 799**	2xFS5, 2xFS6

Material: Standard: Diecast zinc
designLINE: painted, RAL 9006
Fastening material: Steel; galvanized
Scope of delivery: Incl. fastening material (FS)

Clamping lever M5x10	No.
For joint 60x45	**3 842 505 144**

Material: Diecast zinc, black polymer coating

Joint 60x60	Slot	ESD	No.	FS
Standard	10		**3 842 502 687**	2xFS5, 2xFS6
designLINE	10		**3 842 539 800**	2xFS5, 2xFS6

Material: Standard: Diecast zinc
designLINE: painted, RAL 9006
Fastening material: Steel; galvanized
Scope of delivery: Incl. fastening material (FS)

Clamping lever M5x10	No.
For joint 60x60	**3 842 505 144**

Material: Diecast zinc, black polymer coating

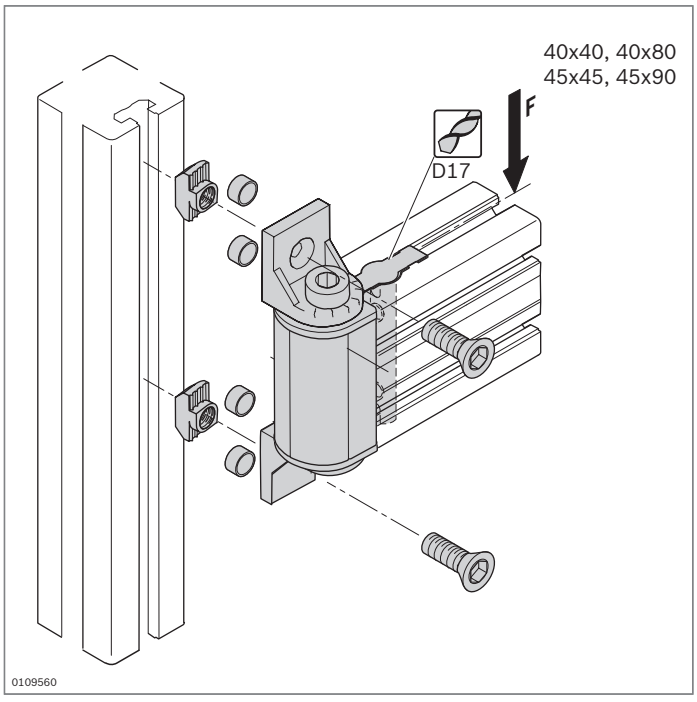

Swivel bearing

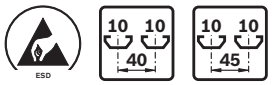

designLINE

- Suitable for swiveling right-angled profile connections, e.g. for constructing supporting arms or doors
- *designLINE* version with special silver paint (RAL 9006) for an attractive, high-quality design
- Profile finishing:
  Through-hole D17

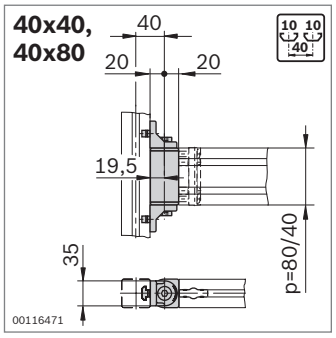

Profile	F, L M_{max} = F x L (Nm)
40x40	40
40x80	130

FS1



Swivel bearing		p (mm)	ESD	No.	FS
40x40	Standard	40		**3 842 554 404**	2xFS1
	designLINE	40		**3 842 554 412**	2xFS1
40x80	Standard	80		**3 842 554 406**	2xFS1
	designLINE	80		**3 842 554 414**	2xFS1

Material: Standard: Diecast aluminum
designLINE: painted (RAL 9006)
Fastening material: Steel; galvanized
Cover cap: PP; gray

Scope of delivery: Incl. cover caps, bolt connectors, fastening material (FS)

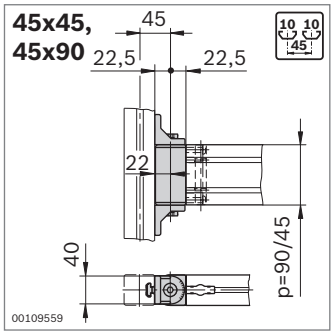

Profile	F, L M_{max} = F x L (Nm)
45x45	50
45x90	150

FS1



Swivel bearing		p (mm)	ESD	No.	FS
45x45	Standard	45		**3 842 554 408**	2xFS1
	designLINE	45		**3 842 554 416**	2xFS1
45x90	Standard	90		**3 842 554 410**	2xFS1
	designLINE	90		**3 842 554 418**	2xFS1

Material: Standard: Diecast zinc
designLINE: painted (RAL 9006)
Fastening material: Steel; galvanized
Cover cap: PP; gray

Scope of delivery: Incl. cover caps, bolt connectors, fastening material (FS)

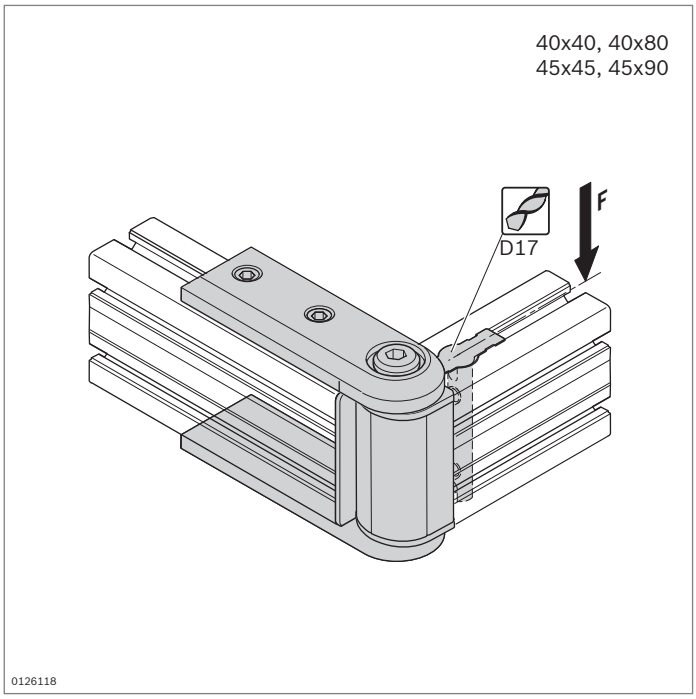

Supporting arm joint

designLINE

- Suitable for swiveling end connections, e.g. for the construction of supporting arms
- *designLINE* version with special silver paint (RAL 9006) for an attractive, high-quality design
- Profile finishing:
  Through-hole D17

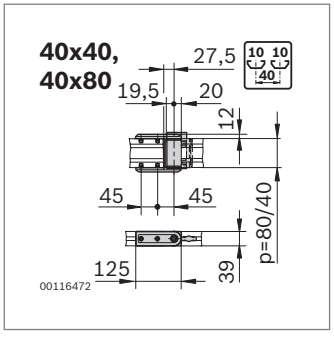

Profile	M_{max} = F x L (Nm)
40x40	40
40x80	130

FS1
ISO4762
M6x16

Supporting arm joint		p (mm)	ESD	No.	FS
40x40	Standard	40		**3 842 554 420**	4xFS1
	designLINE	40		**3 842 554 428**	4xFS1
40x80	Standard	80		**3 842 554 422**	4xFS1
	designLINE	80		**3 842 554 430**	4xFS1

Material: Standard: Diecast zinc
designLINE: painted (RAL 9006)
Cover cap: PP, signal gray
Fastening material: Steel; galvanized
Scope of delivery: Incl. cover caps, bolt connectors, fastening material (FS)

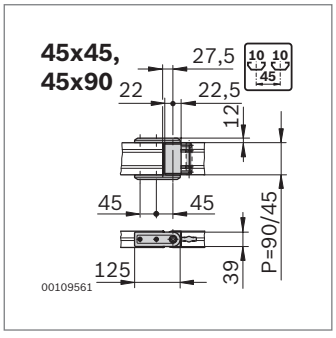

Profile	M_{max} = F x L (Nm)
45x45	50
45x90	150

FS1
ISO4762
M6x16

Supporting arm joint		p (mm)	ESD	No.	FS
45x45	Standard	45		**3 842 554 424**	4xFS1
	designLINE	45		**3 842 554 432**	4xFS1
45x90	Standard	90		**3 842 554 426**	4xFS1
	designLINE	90		**3 842 554 434**	4xFS1

Material: Standard: Diecast zinc
designLINE: painted (RAL 9006)
Cover cap: PP, signal gray
Fastening material: Steel; galvanized
Scope of delivery: Incl. cover caps, bolt connectors, fastening material (FS)

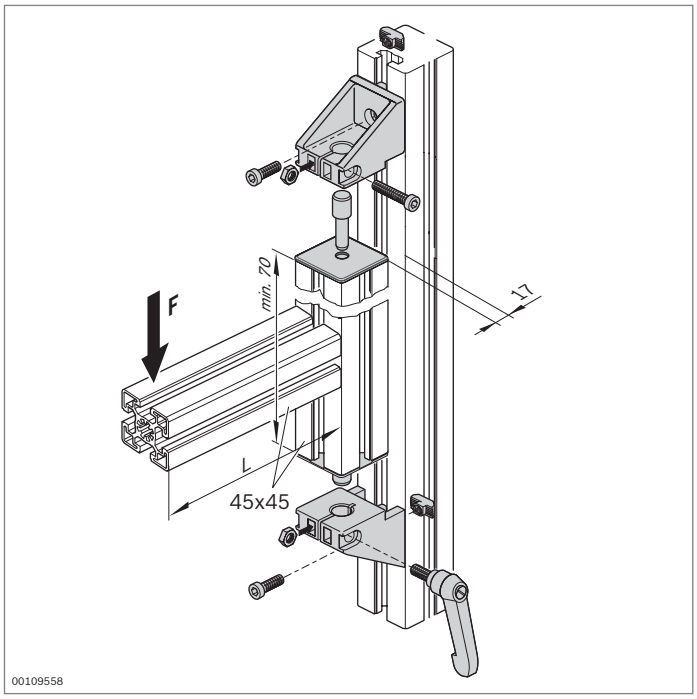

Bearing pedestal

10 *designLINE*

- Bearing pedestal for heavy constructions which have to be swiveled
- *designLINE* version with special silver paint (RAL 9006) for an attractive, high-quality design

4

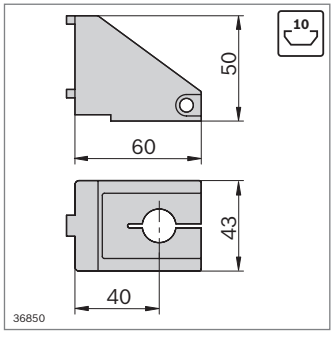

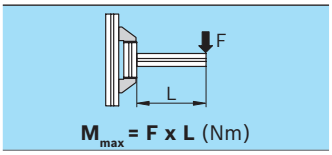

M_{max} = **F x L** (Nm)

400

FS1

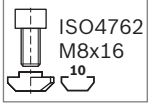

Bearing pedestal		Slot	No.	FS
Standard		10	**3 842 547 868**	2xFS1
designLINE		10	**3 842 547 869**	2xFS1
Material:	Standard: Diecast zinc *designLINE*: painted (RAL 9006) Fastening material: Steel; galvanized Clamping lever handle: Diecast zinc; black plastic coated Cover cap: PP, signal gray			
Scope of delivery:	Incl. fastening material (FS), 2 x cover cap, 2 x bolt, clamping lever (and additional standard parts for clamping the bearing pedestal)			

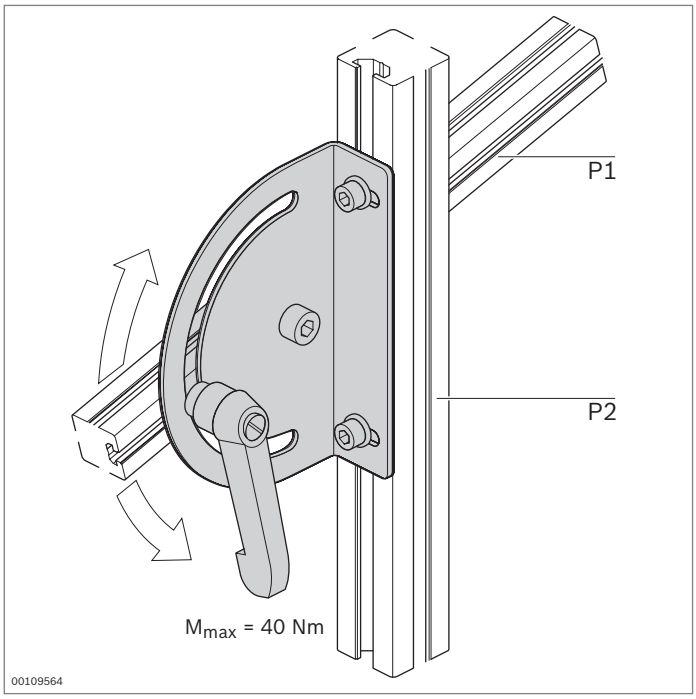

Swivel mounting 180°



- Swivel mounting for shelves, etc. which need to be positioned at an angle of ± 90°

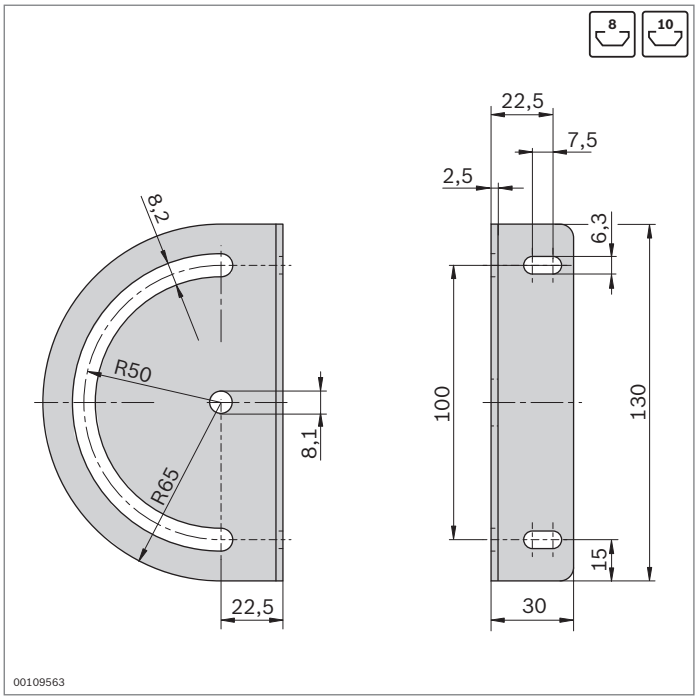

Swivel mounting 180°	P1 / P2	ESD	No.	FS
	8 / 8 8 / 10	ESD	**3 842 538 275**	FS1 2xFS3 2xFS4 2xFS5
	10 / 8 10 / 10	ESD	**3 842 538 276**	FS2 2xFS3 2xFS4 2xFS5

Material:	Swivel mounting: Steel; galvanized Clamping lever: Diecast zinc; black plastic coated
Scope of delivery:	Incl. fastening material (FS), clamping lever with disk and swivel-in sliding block with spring

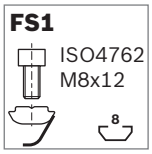

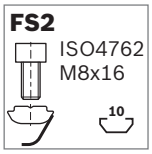

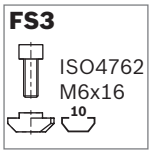





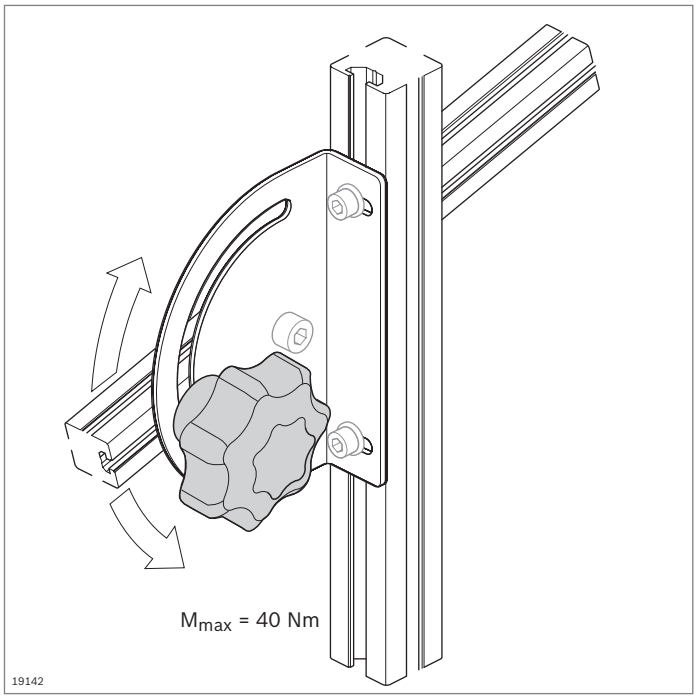

Clamping lever, star knob



- Clamping elements for adjustable connections

Accessories:

- Screws and sliding blocks; see fastening material (p. 4-12)

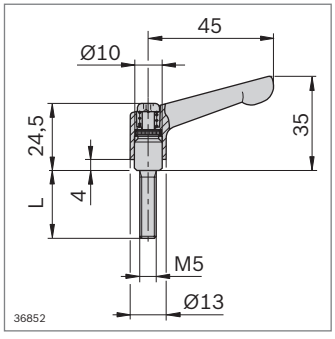

Clamping lever M5	L (mm)	No.
	10	**3 842 505 144**
Material:	Clamping lever: Diecast zinc; black plastic coated Screws: Steel; bronzed	

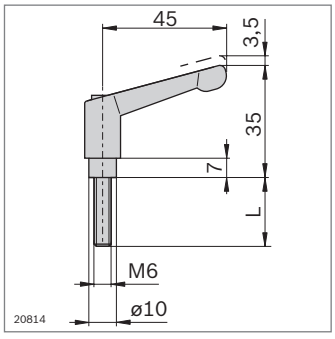

Clamping lever M6	L (mm)	No.
	25	**3 842 528 540**
	40	**3 842 528 539**
Material:	Clamping lever: Diecast zinc; black plastic coated Screws: Steel; galvanized and black chrome-plated	

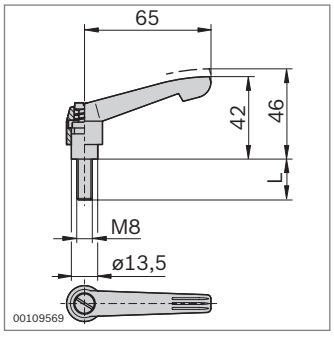

Clamping lever M8	L (mm)	No.
	12	**3 842 516 845**
	16	**3 842 522 124**
	20	**3 842 516 846**
	40	**3 842 516 847**
	45	**3 842 538 607**
	55	**3 842 516 848**
Material:	Clamping lever: Diecast zinc; black plastic coated Steel parts: galvanized, strength class 5.8	

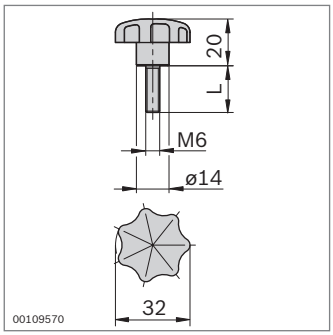

Star knob M6	**L** (mm)	**No.**
	15	**3 842 516 849**
	20	**3 842 516 850**
Material:	Star knob: PA; black Steel parts: galvanized, strength class 5.8	

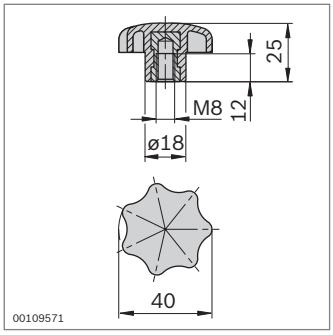

Star knob M8		**No.**
		3 842 516 851
Material:	Star knob: PA; black Steel parts: galvanized, strength class 5.8	

Air-supply elements



Flanged plate (p. 5-3)

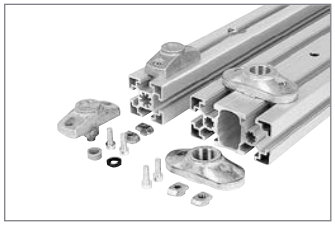

Connection piece (p. 5-4)

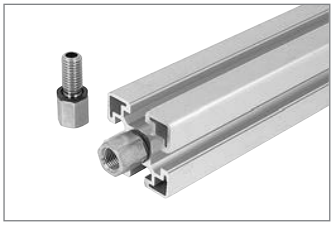

Connection screw fitting M12-1/4" (p. 5-4)

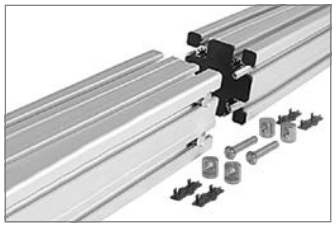

Longitudinal end connector (p. 5-5)

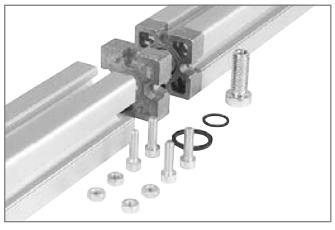

Longitudinal end connector 45 Pneu (p. 5-6)

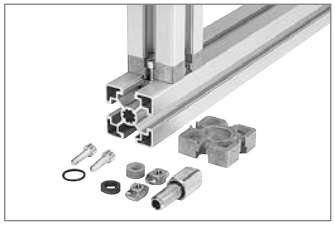

T-connector 45 Pneu (p. 5-6)

45x90
(p. 2-43)

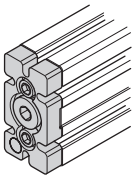

19584

45x90

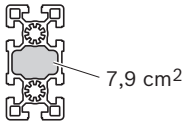

00109732

45x90L
45x90L 2N
45x90L 3NVS
(p. 2-41)

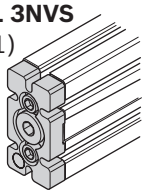

19585

45x90L

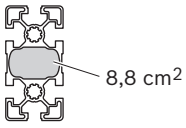

00109731

45x180
(p. 2-43)

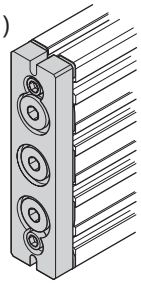

19586

45x180

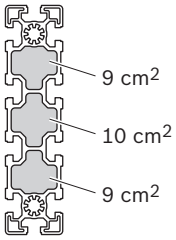

00109733

90x90L
90x90L 4N
90x90L 4NVS
(p. 2-45)

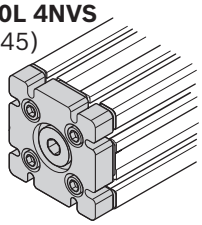

19587

90x90L

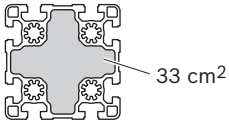

00109730

90x180L
(p. 2-47)

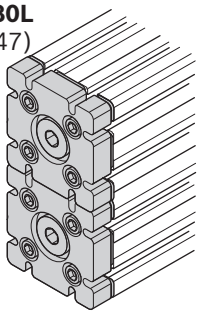

19588

90x180L

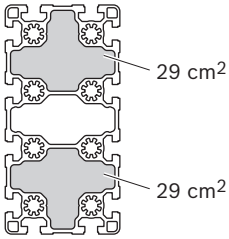

00109734

Air-supply elements

- Rexroth **strut profiles** can be used as compressed-air lines and reservoirs. The hollow chambers or central holes are used
- **Flanged plate** for end closing of profiles (p. 5-3)
- Compressed-air intake or discharge at the flanged plate, **connection piece**, or **connection screw fitting** (p. 5-4)
- Air-tight connecting of profiles with **longitudinal end connectors or T-connectors** (p. 5-6, 5-5)
- The use of the heavy-duty profiles is preferable in the case of more demanding leak-tightness requirements (e.g. for underwater applications)

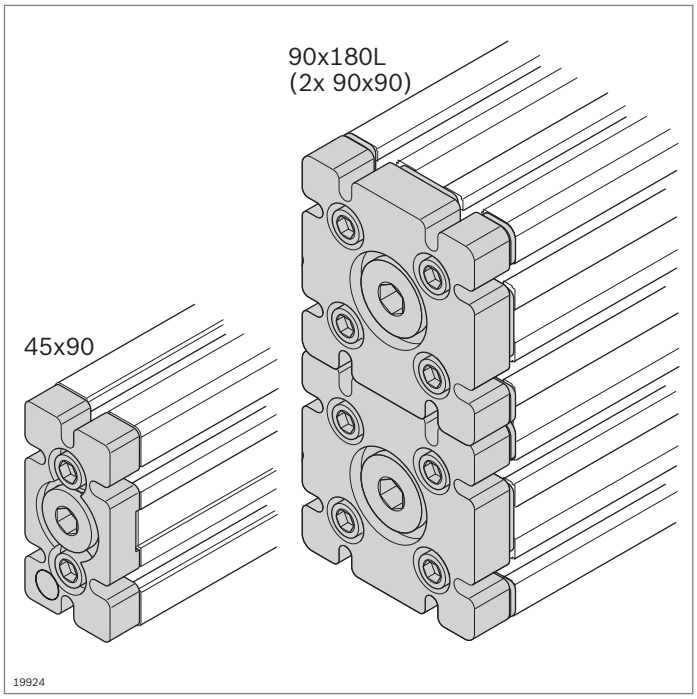

Flanged plate



- For sealing the ends of the hollow chambers. This enables the profiles to be used as a compressed-air line
- For compressed-air introduction or removal when screw plugs are replaced by pneumatic screw fittings
- Profile finishing: M12 thread cutting in the central holes
- For a maximum pressure (p_{max}) of 8 bar

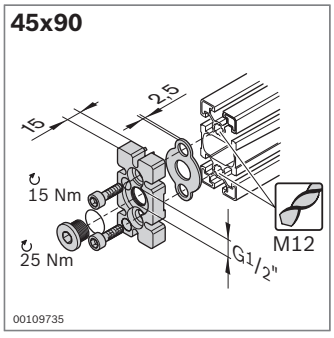

FS1

DIN 7984
M12x30

Flanged plate		No.	FS
45x90		**3 842 523 097**	2xFS1
Material:	Flanged plate: Diecast aluminum Seal: NBR Fastening material: Steel; galvanized		
Scope of delivery:	Incl. fastening material (FS), screw plug, seals		

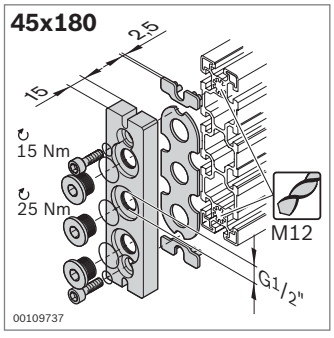

FS2

DIN 7984
M12x20

Flanged plate		No.	FS
45x180	2	**3 842 535 721**	2xFS2
Material:	Flanged plate: Aluminum Seal: NBR Fastening material: Steel; galvanized		
Scope of delivery:	Incl. fastening material (FS), 2 x spacer, 3 x screw plug, seals		

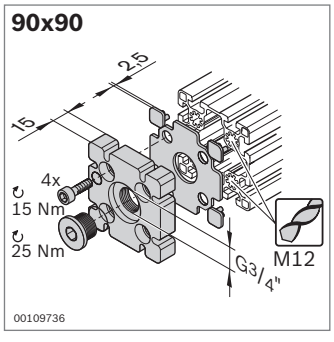

FS1

DIN 7984
M12x30

Flanged plate		No.	FS
90x90		**3 842 523 098**	4xFS1
Material:	Flanged plate: Diecast aluminum Seal: NBR Fastening material: Steel; galvanized		
Scope of delivery:	Incl. fastening material (FS), 4 x spacer, screw plug, seals		

Notice: Only suitable for light profiles 90x90L and 90x180L.

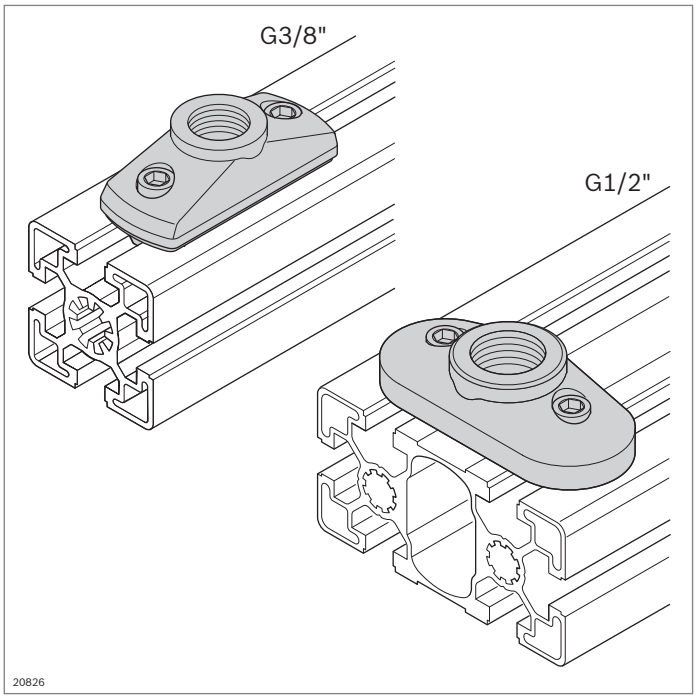

Connection piece
Connection screw fitting M12-1/4"



Connection piece

- For compressed-air intake or discharge at any point on the profile
- G3/8" for connection at central profile bore
- G1/2" for connection at hollow chamber
- Suitable for light and standard profiles
  - Profile finishing: Blind hole DI9.8; blind hole ø21 mm (drilling jig **3 842 528 574**, p. 14-3)
- For a maximum pressure (p_{max}) of 8 bar

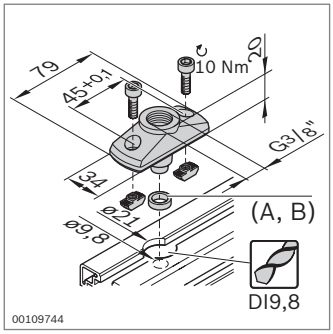



Connection piece		No.	FS
G3/8"		**3 842 523 092**	2xFS1
Material:	Connection piece: Diecast aluminum Seal: NBR		
Scope of delivery:	Incl. fastening material, seals (**A**, **B**)		
Accessories:	Seals **A**, **B** (p. 5-6)		

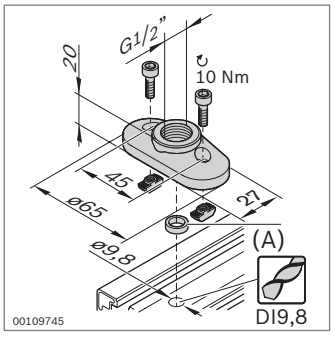

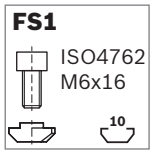

Connection piece		No.	FS
G1/2"		**3 842 352 085**	2xFS1
Material:	Connection piece: Diecast zinc Seal: NBR		
Scope of delivery:	Incl. fastening material, seal (**A**)		
Accessories:	Seal **A** (p. 5-6)		

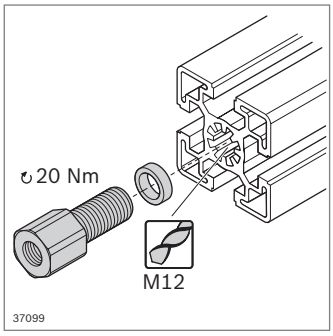

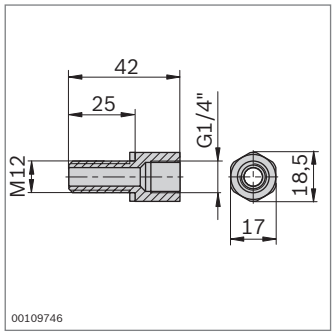

Connection screw fitting M12-1/4"

- For screw fitting in central profile bore
- Profile finishing: M12
- For a maximum pressure (p_{max}) of 8 bar

Connection screw fitting		No.
M12-1/4"	10	**3 842 535 719**
Material:	Connection screw fitting: Steel; galvanized Seal: PVC; hard	
Scope of delivery:	Incl. Seal	

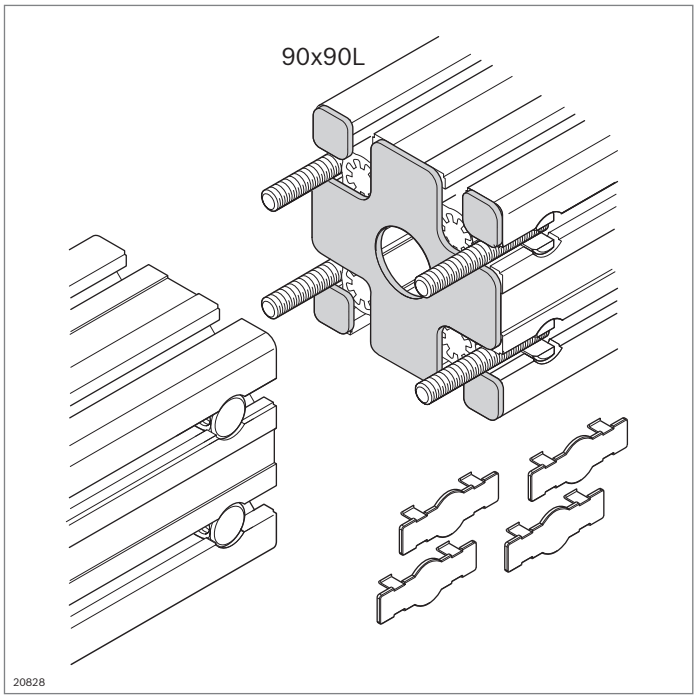

Longitudinal end connection



- Seal for end-to-end connection of profiles carrying compressed air
- Profile finishing: Through-hole D17 (45x90, 45x180); blind hole LF (90x90L)
- For a maximum pressure (p_{max}) of 8 bar

Required accessories:
Longitudinal end connector for profile connection (p. 3-59)

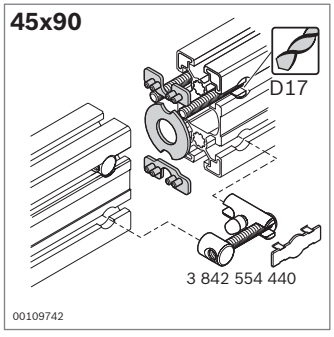

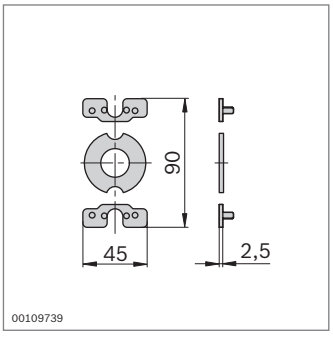

Longitudinal end connection		No.
45x90		**3 842 508 087**
Material:	Seal: PUR Spacer: PA	
Scope of delivery:	Seal, 2 x spacer	

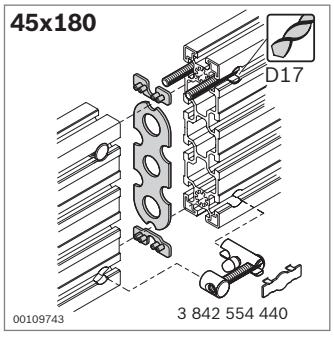

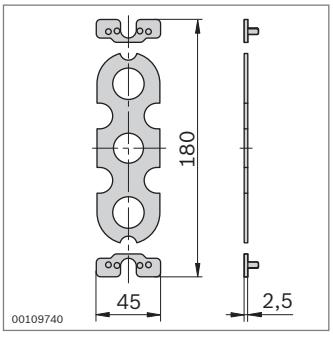

Longitudinal end connection		No.
45x180		**3 842 508 088**
Material:	Seal: NBR Spacer: PA	
Scope of delivery:	Seal, 2 x spacer	

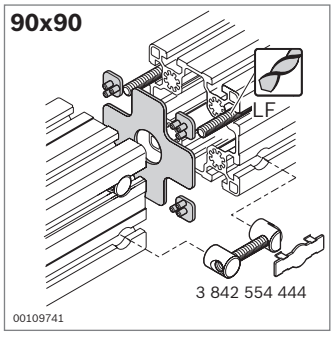

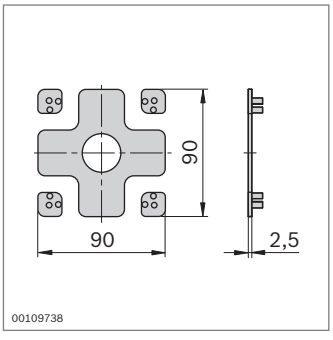

Longitudinal end connection		No.
90x90		**3 842 510 145**
Material:	Seal: NBR Spacer: PA	
Scope of delivery:	Seal, 4 x spacer	

Notice: Only suitable for light profile 90x90L.

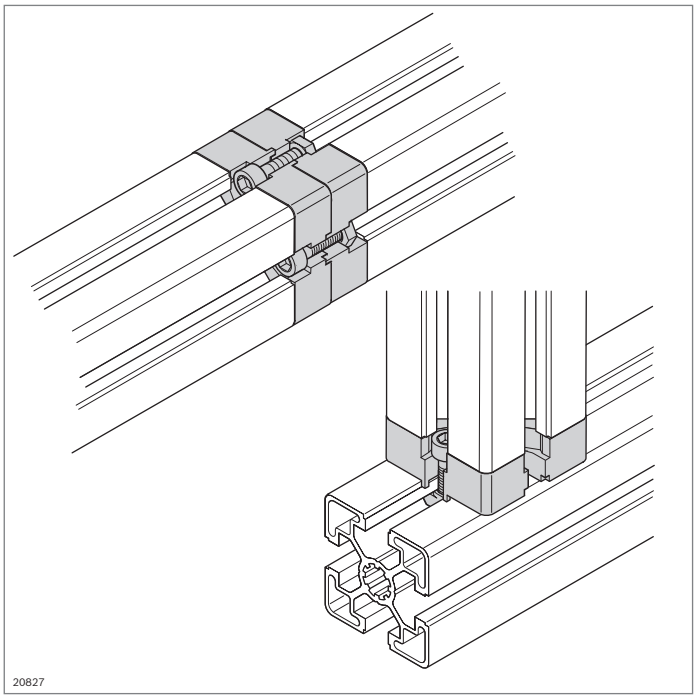

Longitudinal end connector 45 Pneu
T-connector 45 Pneu, seal



- Longitudinal end connector 45 Pneu for end face mechanical and pneumatic connections of two 45x45 or 45x45L profiles for using the central hole as a compressed-air line
- T-connector 45 Pneu for the mechanical and pneumatic connection of two 45x45 or 45x45L profiles at under a 90° angle for using the central hole as a compressed-air line
- Profile finishing: M12 in central hole; blind hole DI9.8; blind hole ø21 mm (drilling jig **3 842 528 574**, p. 14-3)
- For a maximum pressure (p_{max}) of 8 bar

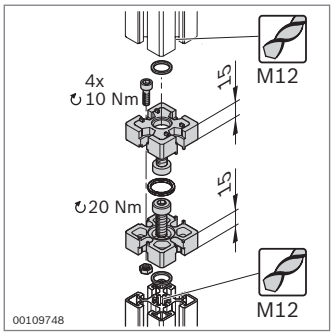

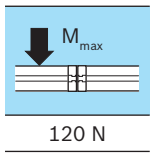

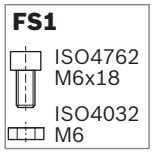

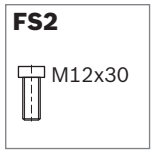

Longitudinal end connector	No.	FS
45 Pneu	**3 842 523 094**	4xFS1, 2xFS2

Material: Longitudinal end connector: Diecast aluminum
Seal: NBR
Scope of delivery: Incl. fastening material, sealing rings

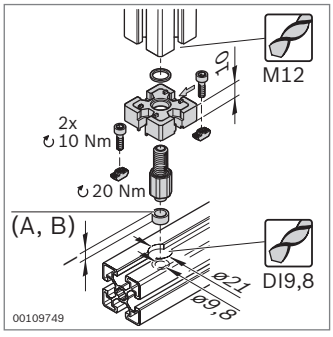

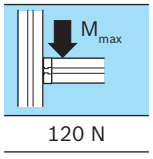

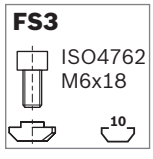

T-connector	No.	FS
45 Pneu	**3 842 523 093**	2xFS3

Material: T-connector: Diecast aluminum
Seal: NBR
Scope of delivery: Incl. fastening material, seals (**A**, **B**) for standard and light profiles

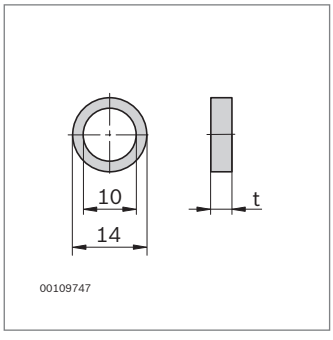

- Seal for connection piece and T-connector

Seal		t (mm)		No.
A	For standard profiles	4	10	**3 842 503 242**
B	For light profiles	7	10	**3 842 523 102**

Material: NBR

Feet and wheels



Modular leveling feet (p. 6-2)



Leveling foot, foot, damping ring (p. 6-4)

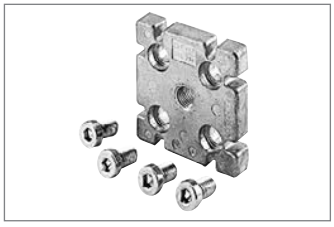

Plate (p. 6-6)



Base plate, steel (p. 6-8)



Base plate (p. 6-10)



Base plate (p. 6-11)



Foot (p. 6-12)



Foot, stainless steel (p. 6-14)



Double wheel (p. 6-16)

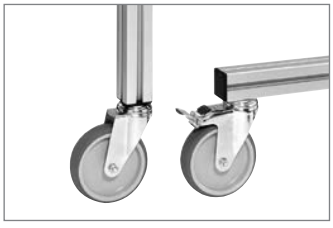

Wheel (p. 6-17)



Heavy-duty wheel (p. 6-20)



Lifting wheel (p. 6-22)

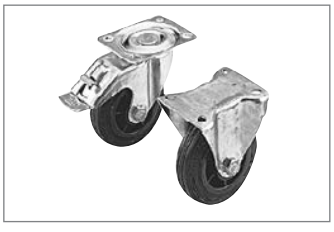

Roller with mounting flange (p. 6-24)

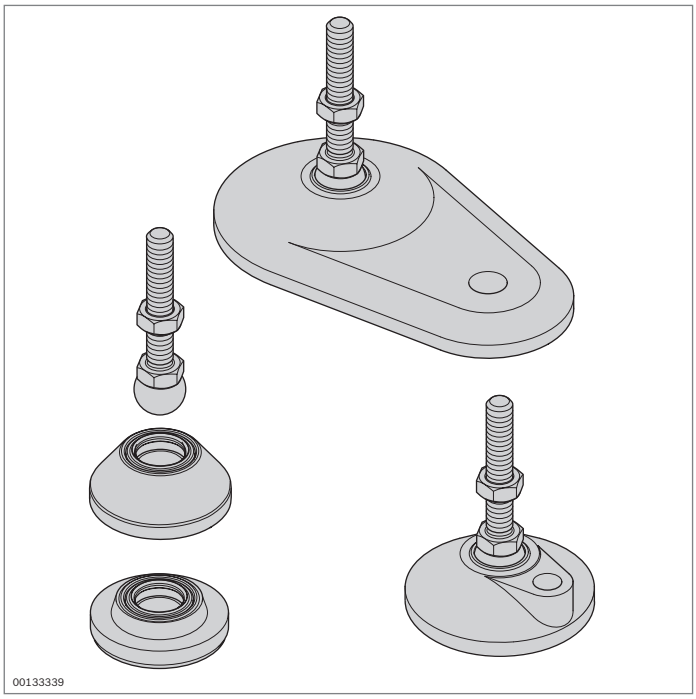

Modular leveling feet

- Leveling feet for compensating irregularities in the floor up to 10°
  - Modular system, various combinations possible
  - Spindles and base plates can be combined as desired
  - Base plates with screw hole for simple screw fitting to the floor
- The damping plate prevents the transfer of vibrations and allows a defined conduction of voltages via a set of grounding components (p. 17-2)
- Profile finishing: Thread M in central hole

Accessories: Bearing ring (p. 6-16)

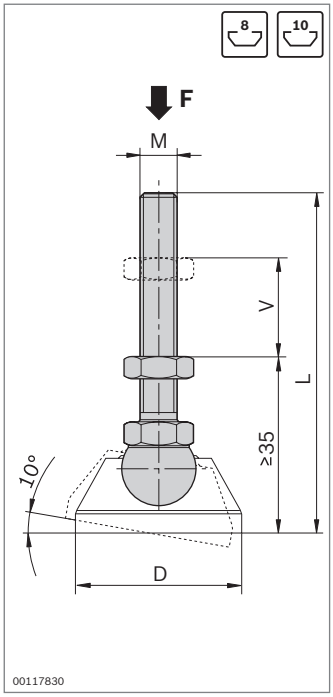

Spindle	F (N)	M	L (mm)	V (mm)	ESD		No.
Stainless steel	10000	M8	75	20	ESD	20	**3 842 536 811**
	20000	M12	85	30	ESD	20	**3 842 536 812**
	20000	M12	145	80	ESD	20	**3 842 537 223**
	20000	M12	200	135	ESD	20	**3 842 537 225**
	30000	M16	85	20	ESD	20	**3 842 537 227**
	30000	M16	145	80	ESD	20	**3 842 537 229**
	30000	M16	200	135	ESD	20	**3 842 537 231**
Steel; galvanized	10000	M8	75	20	ESD	20	**3 842 537 220**
	20000	M12	85	30	ESD	20	**3 842 537 222**
	20000	M12	145	80	ESD	20	**3 842 537 224**
	20000	M12	200	135	ESD	20	**3 842 537 226**
	30000	M16	85	20	ESD	20	**3 842 537 228**
	30000	M16	145	80	ESD	20	**3 842 537 230**
	30000	M16	200	135	ESD	20	**3 842 537 232**

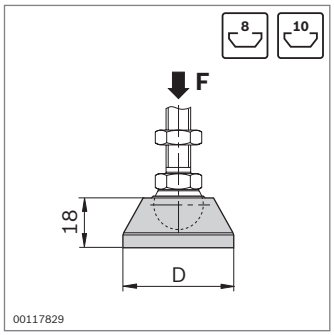

Base plate	F (N)	D (mm)	ESD		No.
Stainless steel	20000	29	✓	20	**3 842 536 694**
	30000	39	✓	20	**3 842 536 695**
	30000	44	✓	20	**3 842 536 696**
	30000	59	✓	20	**3 842 538 673**
	30000	79	✓	20	**3 842 537 206**
Diecast zinc, black powder coating	20000	29		20	**3 842 538 674**
	30000	39		20	**3 842 538 675**
	30000	44		20	**3 842 538 676**
	30000	59		20	**3 842 538 677**
	30000	79		20	**3 842 538 678**
PA; black	5000	29		20	**3 842 538 832**
	9000	39		20	**3 842 538 833**
	9000	44		20	**3 842 538 834**
	9000	59		20	**3 842 538 835**
	9000	79		20	**3 842 538 836**

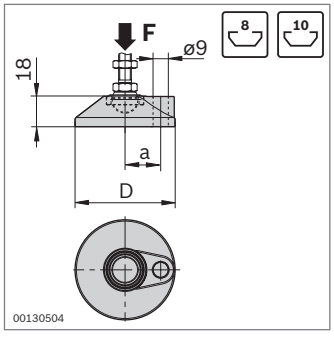

Base plate with screw hole	F (N)	D (mm)	a (mm)		No.
	30000	59	21	20	**3 842 538 932**
	30000	79	31	20	**3 842 538 934**

Material: Diecast zinc, black powder coating

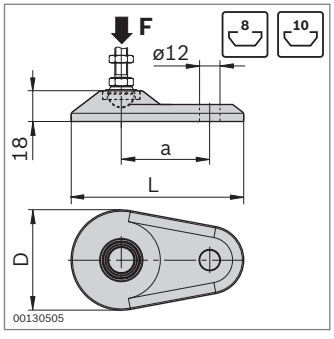

Oval base plate with screw hole	F (N)	D (mm)	a (mm)	L (mm)		No.
	30000	59	52	100	20	**3 842 538 679**
	30000	79	65	130	20	**3 842 538 680**

Material: Diecast zinc, black powder coating

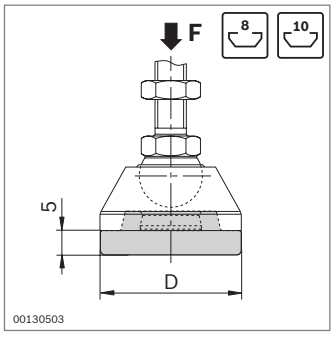

Damping plate	F (N)	D (mm)		No.
	1100	29	20	**3 842 538 555**
	1600	39	20	**3 842 538 556**
	2000	44	20	**3 842 538 557**
	2500	59	20	**3 842 538 558**
	2800	79	20	**3 842 538 559**

Material: PUR; black

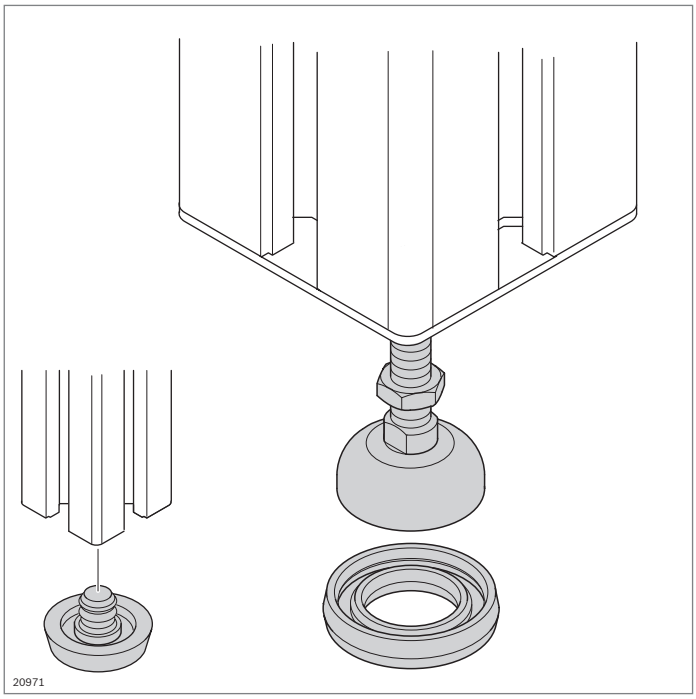

Leveling foot, foot, Damping ring

Leveling foot

- For compensating irregularities in the floor up to 5°
- Fully assembled spindle and base plate
- Profile finishing: Threading in central hole

Damping ring

- The electrically insulating damping ring prevents the transfer of vibrations and allows a defined conduction of voltages via a set of grounding components (p. 17-2)

Optional accessories:
Bearing ring (p. 6-16), for when cover caps with a hole are used

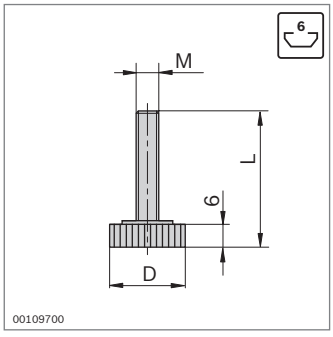

Leveling foot	M	D (mm)	L (mm)		No.
	M6	20	41	20	**3 842 518 743**
Material: Steel/plastic					

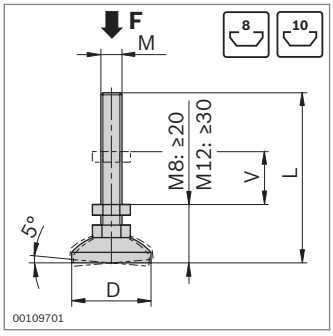

Leveling foot	F (N)	M	D (mm)	L (mm)	V (mm)	ESD		No.
	5000	M8	30	65	15	ESD	20	**3 842 502 257**
	8000	M12	30	72	14	ESD	20	**3 842 529 025**
Material: Steel; galvanized								

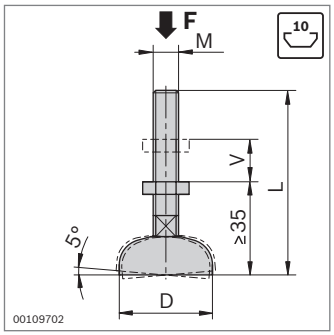

Leveling foot	F (N)	M	D (mm)	L (mm)	V (mm)	ESD		No.
	10000	M12	44	85	30		20	**3 842 352 061**
	20000	M16	44	145	80		20	**3 842 311 956**
	10000	M12	44	160	80		20	**3 842 536 470**
	20000	M16	44	200	135		20	**3 842 554 149**
	10000	M12	58	85	30		20	**3 842 511 893**
	20000	M16	90	85	20		20	**3 842 311 950**
	20000	M16	90	145	80		20	**3 842 311 951**
	20000	M16	90	200	135		20	**3 842 527 186**

Material: Steel; galvanized

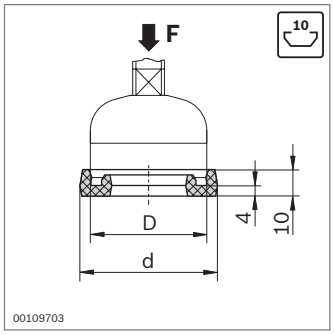

Damping ring	F (N)	D (mm)	d (mm)		No.
	1600	30	39	20	**3 842 529 024**
	2000	44	52	20	**3 842 521 817**
	2500	58	66	20	**3 842 522 301**
	3000	90	98	20	**3 842 522 303**

Material: PUR; natural, hardness: shore A 70-80

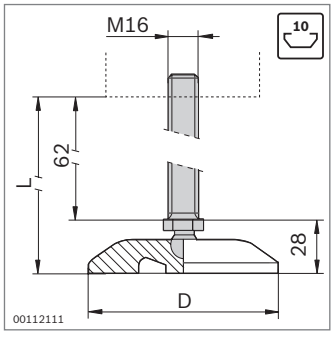

Leveling foot	M	D (mm)	L (mm)	V (mm)		No.
	M16	80	95	62	1	**3 842 533 310**

Material: Spindle: Stainless steel
Base plate: PA

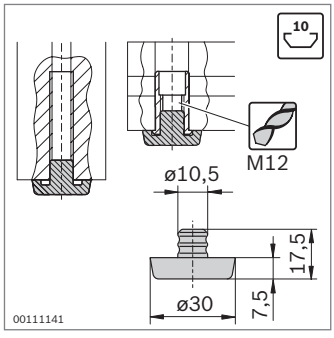

Foot		No.
	100	**3 842 514 568**

Material: TPE; black

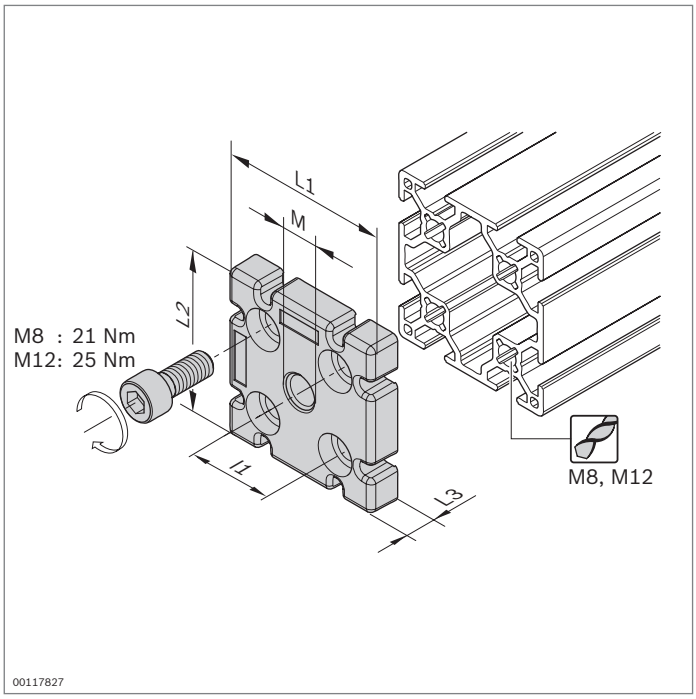

Plate



- For fastening leveling feet in profiles without a central hole
- For use as an end connector or T-connector
- Profile finishing: Tapping of thread in the central hole

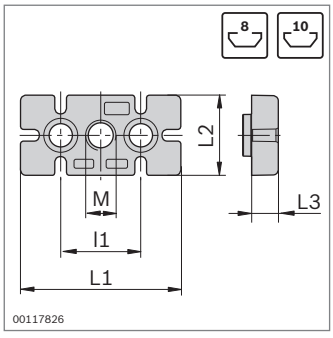

Plate	F (N)	M	L1 (mm)	l1 (mm)	L2 (mm)	L3 (mm)	No.	FS
30x60	8000	M12	60	30	30	11	**3 842 536 560**	2xFS1
40x80	10000	M12	80	40	40	15	**3 842 536 562**	2xFS2
45x90	20000	M16	90	45	45	15	**3 842 536 564**	2xFS2

Material: Plate: Diecast aluminum
Fastening material: Steel; galvanized
Scope of delivery: Incl. fastening material (FS)

FS1


DIN 7984
M8x20

FS2


DIN 7984
M12x20

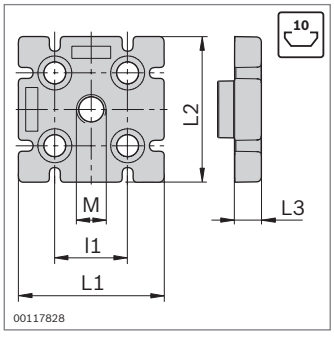

Plate	F (N)	M	L1 (mm)	l1 (mm)	L2 (mm)	L3 (mm)	No.	FS
60x60 8N	10000	M12	60	30	60	11	**3 842 536 566**	4xFS1
80x80L	10000	M12	80	40	80	15	**3 842 529 416**	4xFS2
90x90L	20000	M16	90	45	90	15	**3 842 511 352**	4xFS2
100x100L	20000	M16	100	50	100	15	**3 842 529 417**	4xFS2

Material: Plate: Diecast aluminum
Fastening material: Steel; galvanized
Scope of delivery: Incl. fastening material (FS)

FS1


DIN 7984
M8x20

FS2


DIN 7984
M12x20

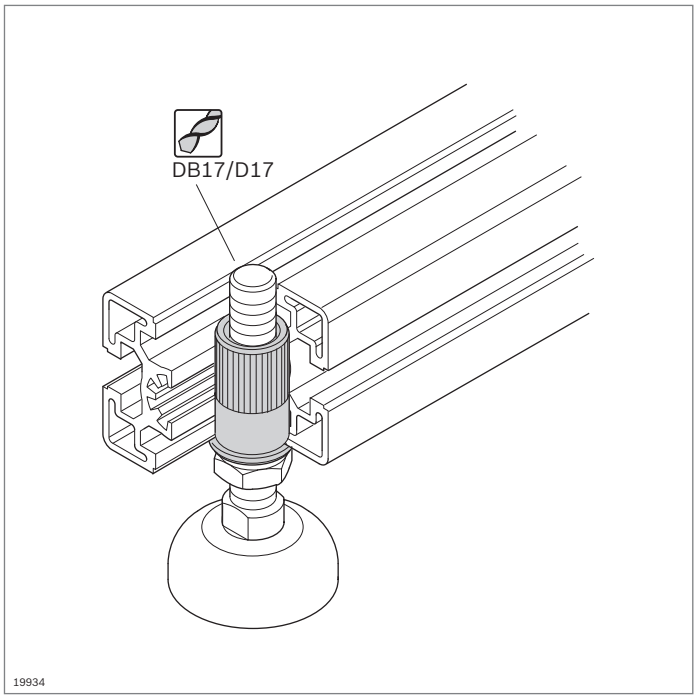

Threaded sleeve

- For fastening leveling feet at an angle to the longitudinal profile direction
- Profile finishing:
  - Drilling of blind hole DB17
  - Through-hole D17

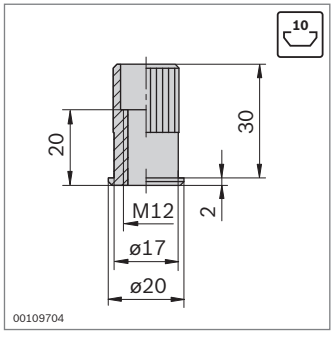

Threaded sleeve		No.
		3 842 504 790
Material:	Steel; galvanized	

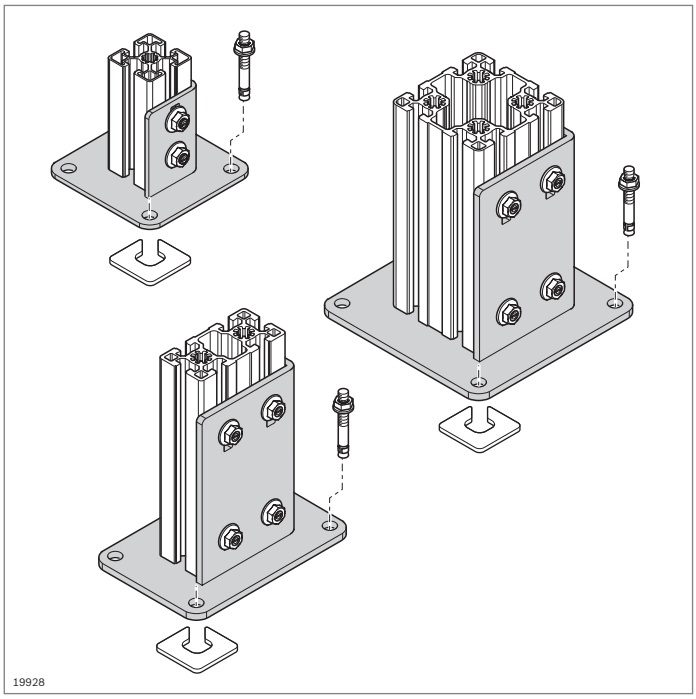

Base plate, steel

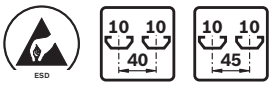

- Used in construction for supporting separating and protective walls
- Profile finishing: Not required

Accessories:

- T-bolt M8x20, 10 mm slot (p. 3-6)
- Flange nut M8 (p. 3-6)
- Floor dowel **3 842 526 561** (p. 6-12)
- Washer (p. 6-13)

40x40

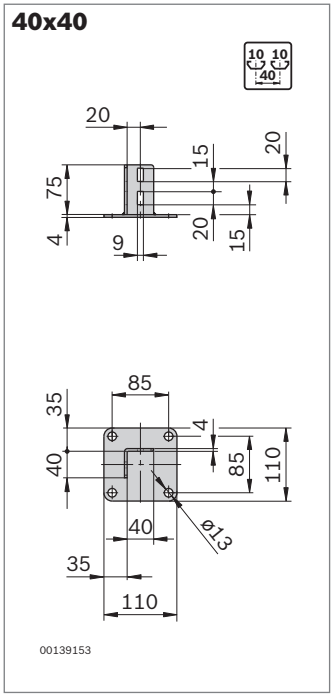

45x45

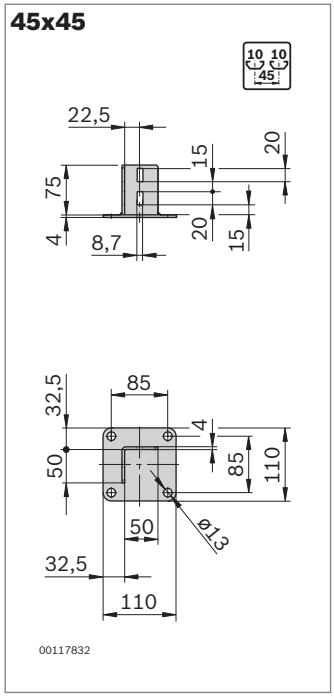

Base plate, steel	ESD	No.
40x40	ESD	**3 842 542 667**
45x45	ESD	**3 842 536 581**

Material: Steel; galvanized

40x80

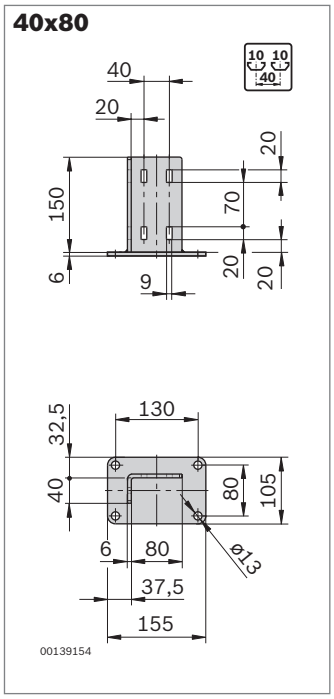

45x90

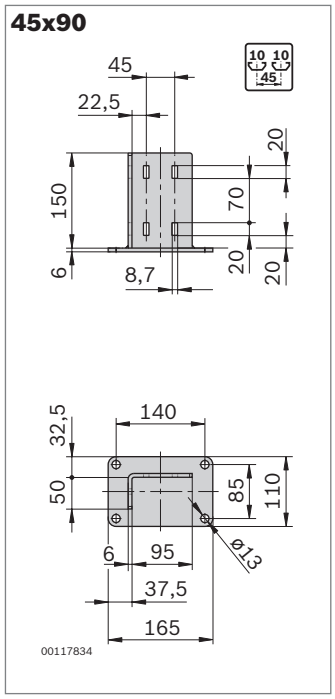

Base plate, steel	ESD	No.
40x80		**3 842 542 668**
45x90		**3 842 536 207**

Material: Steel; galvanized

80x80

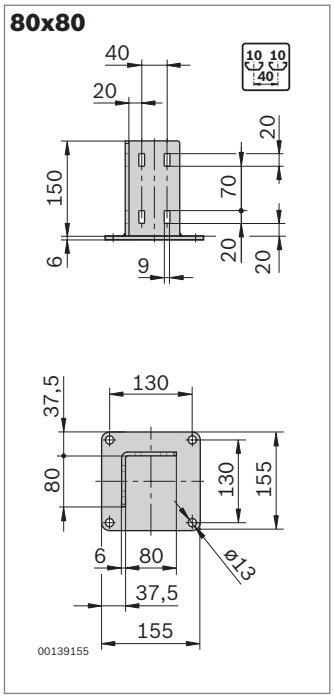

90x90

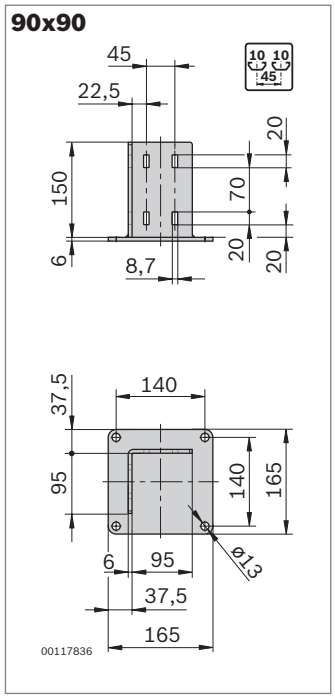

Base plate, steel	ESD	No.
80x80		**3 842 542 669**
90x90		**3 842 536 746**

Material: Steel; galvanized

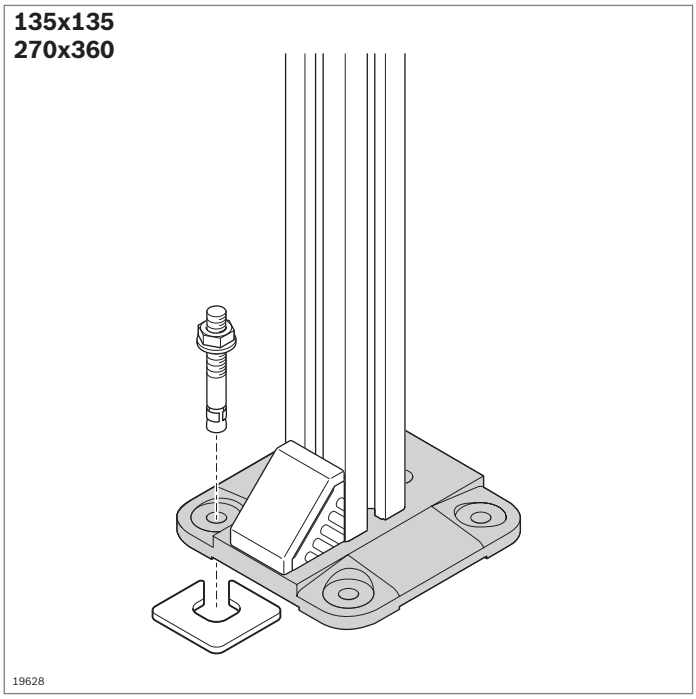

Base plate 135x135, 270x360

- Used in construction for supporting separating and protective walls
- Anchoring with floor dowel

Required accessories:
Bracket (p. 3-18)

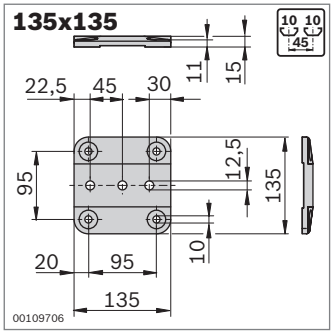

Base plate		ESD	No.
135x135		⏚	**3 842 516 175**
Material:	Diecast aluminum		

Required accessories:
- Floor dowel **3 842 526 560** (p. 6-12)
- Washer (p. 6-13)

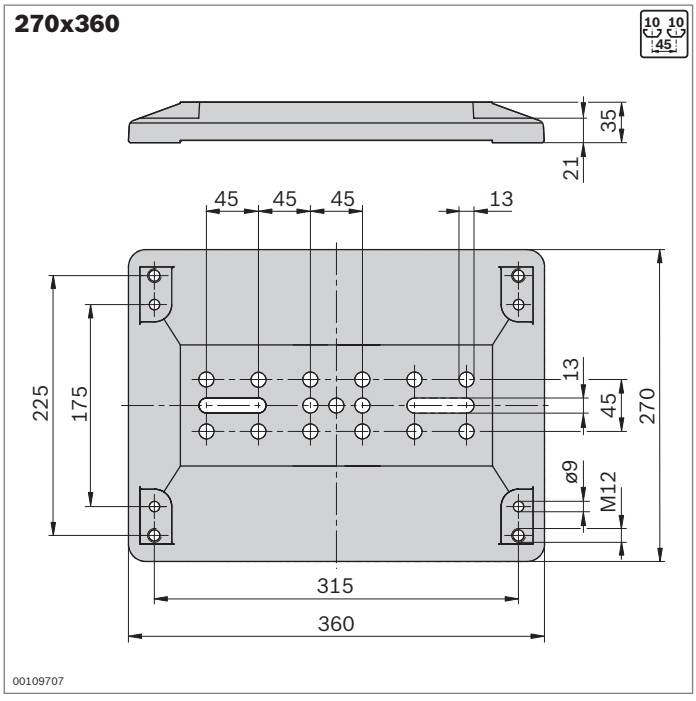

Base plate		No.
270x360		**3 842 514 567**
Material:	Gray cast iron, painted black	

Required accessories:
- Floor dowel **3 842 540 668** (p. 6-12)
- Washer (p. 6-13)

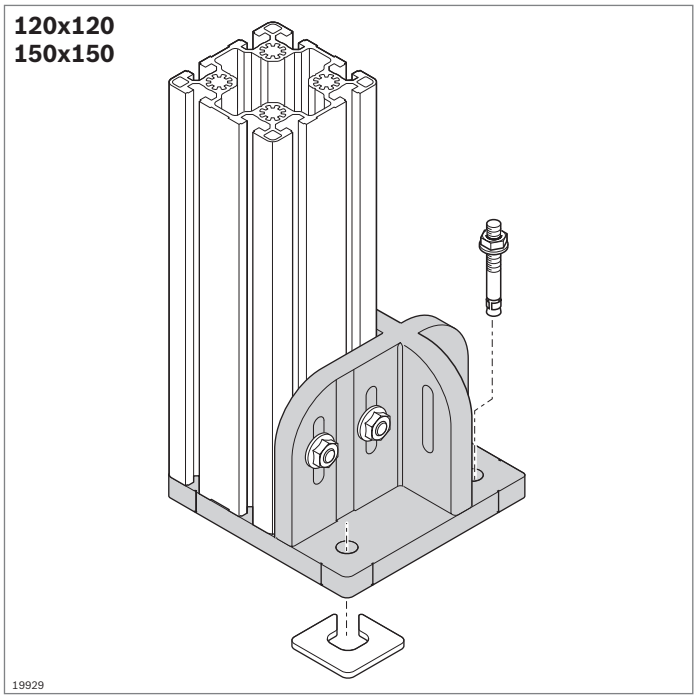

Base plate 120x120, 150x150

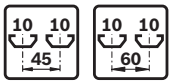

- For flush mounting of supports. No danger of tripping!
- Markings arranged at the center of the profile for precise alignment
- Anchoring with floor dowel

Required accessories:

- T-bolt M8x30 **3 842 528 721** (p. 3-6)
- Flange nut M8 **3 842 345 081** (p. 3-6)
- Floor dowel **3 842 526 561** (p. 6-12)
- Washer (p. 6-13)

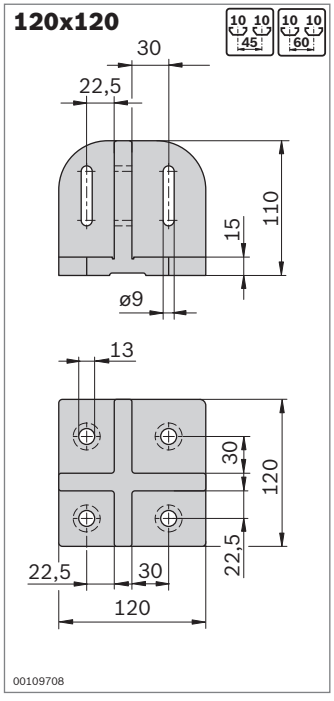

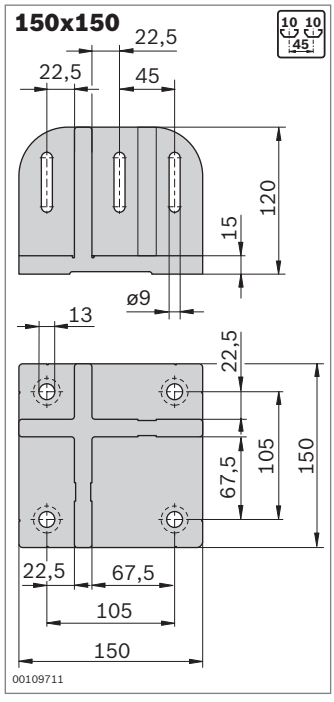

Base plate		ESD	No.
120x120		⚠	**3 842 527 553**
150x150		⚠	**3 842 524 469**
Material:	Diecast aluminum		

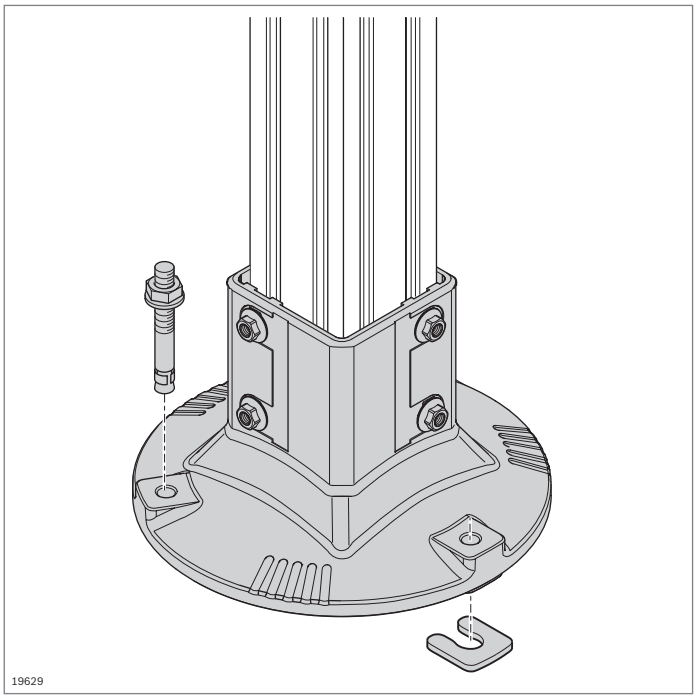

Foot
Floor dowel, washer

Foot

- For constructing supports made of 80x80L and 60x60 profiles
- Large standing surface for high stability
- Easy cleaning thanks to few horizontal surfaces
- Open on the inside to enable draining of liquids
- Stop as depth limit for profile (removable)

Required accessories:

- Floor dowel **3 842 540 668**
- Washer **3 842 546 717** or **3 842 546 718**

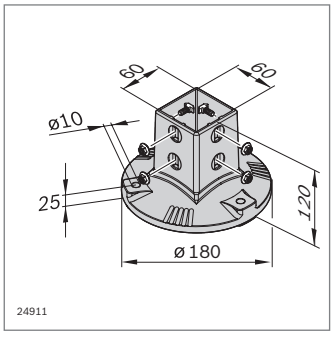

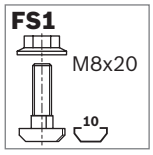

Foot AL		No.	FS
60x60	1	**3 842 544 875**	4xFS1
Material:	Aluminum, silver coating (RAL 9006) Fastening material: Steel; galvanized		
Scope of delivery:	Incl. Fastening material (FS1)		

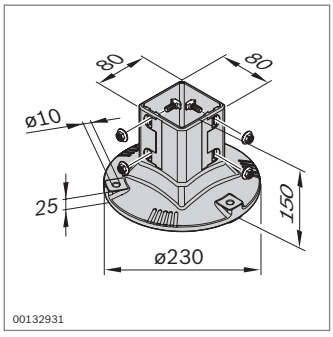

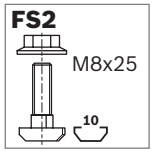

Foot		No.	FS
80x80	1	**3 842 540 173**	4xFS2
Material:	Aluminum, silver coating (RAL 9006) Fastening material: Steel; galvanized		
Scope of delivery:	Incl. Fastening material (FS1)		

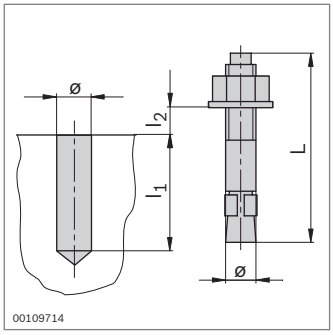

Floor dowel

- For anchoring the base plates

Floor dowel	ø (mm)	L (mm)	l_1 (mm)	$l_{2\,max}$ (mm)		No.
	8	80	65	15	100	**3 842 526 560**
	10	90	70	15	100	**3 842 526 561**
	8	95	65	30	100	**3 842 540 668**
Material:	Steel; galvanized					

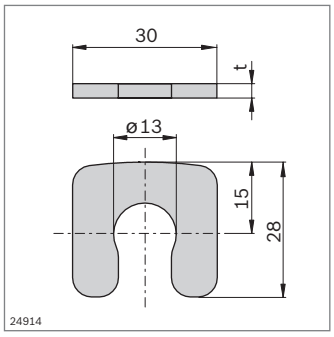

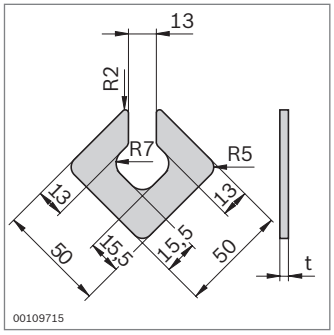

Washer

▶ For leveling in case of uneven flooring

Washer	t (mm)		No.
for round feet	1	100	**3 842 546 717**
	3	100	**3 842 546 718**
Material:	Steel; stainless		

Washer	t (mm)		No.
for square feet	1	100	**3 842 528 189**
	4	100	**3 842 528 191**
Material:	Steel; stainless		

6

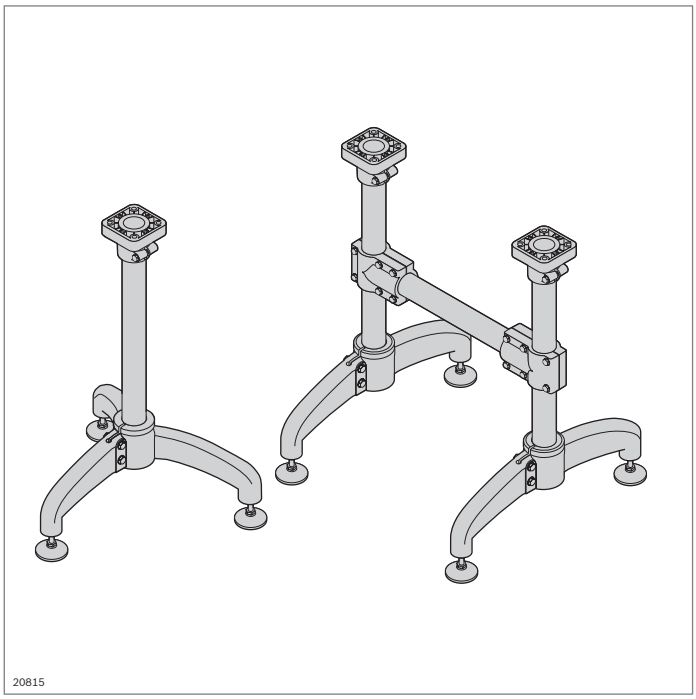

Foot, stainless steel

- Components for constructing feet and frames using the stainless steel tube D 48.3
- Tube fastened by clamping
- Spindle thread M16

Optional accessories:
Leveling foot **3 842 533 310** (p. 6-5)

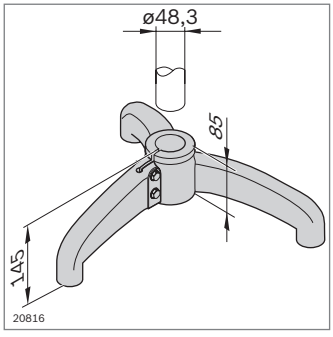

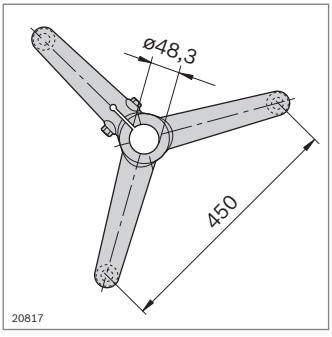

Foot		No.
Tripod		**3 842 533 307**
Material:	Foot: Stainless steel Fastening material: Stainless steel	

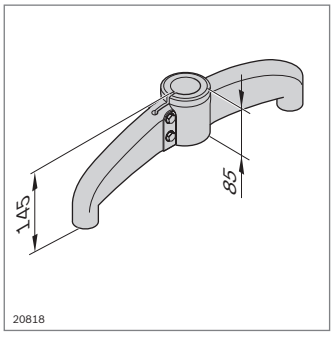

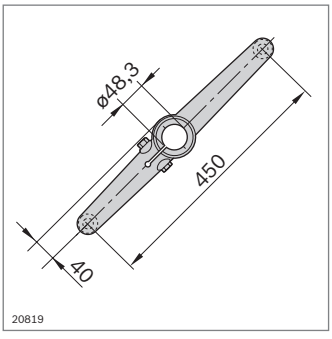

Foot		No.
Bipod		**3 842 533 308**
Material:	Foot: Stainless steel Fastening material: Stainless steel	

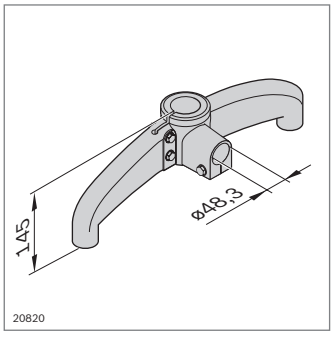

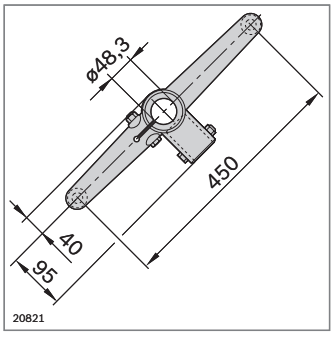

Foot		No.
Bipod with flange		**3 842 533 309**
Material:	Foot: Stainless steel Fastening material: Stainless steel	

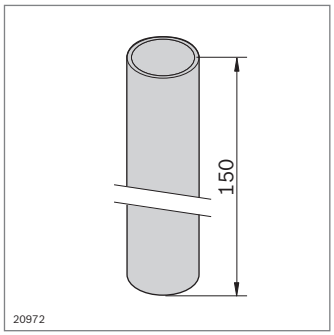

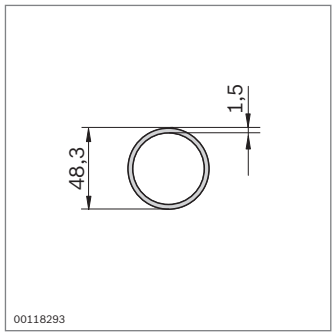

Tube D 48.3		L (mm)	No.
1 pc		200 ... 3000	**3 842 993 308 / L**
6 pcs		3000	**3 842 533 901**

Material: Stainless steel

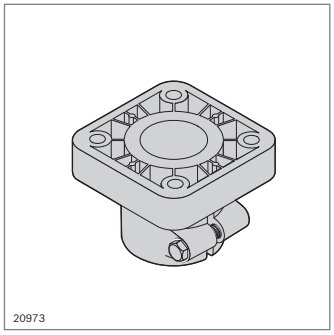

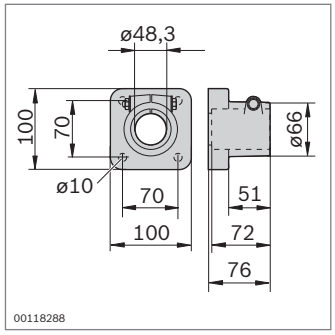

Flange	No.
	3 842 533 305

Material: Flange: PA
Fastening material: Stainless steel

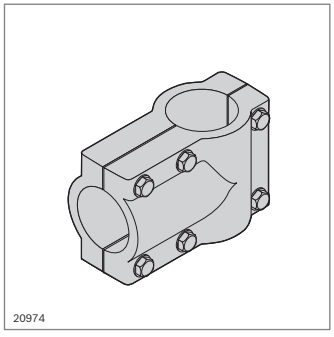

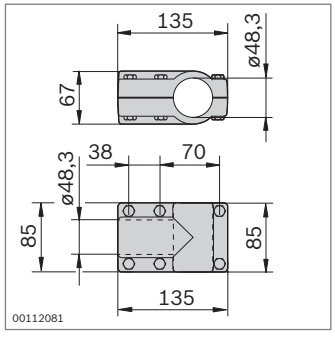

Cross connector	No.
	3 842 533 306

Material: PA
Fastening material, adjustment screw: Stainless steel

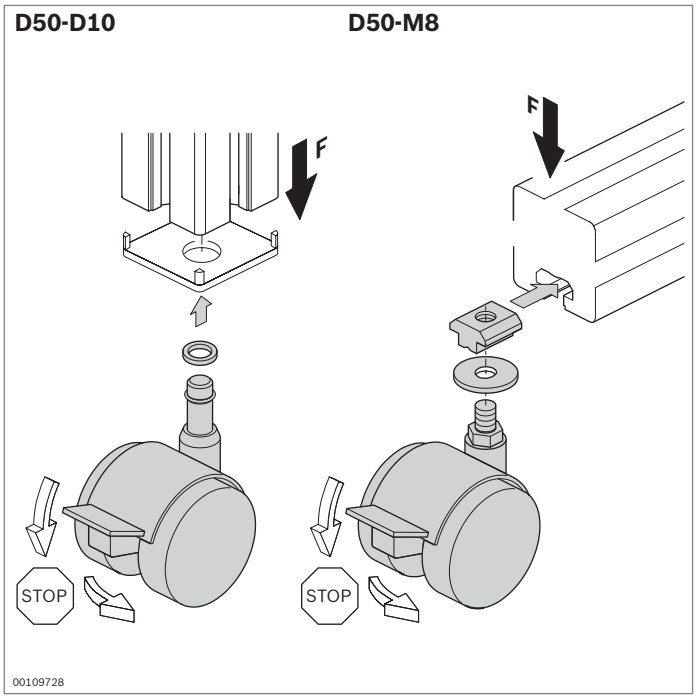

Double wheel

- Attractive double wheel for light applications
- Made of oil-resistant material
- Braked double wheel
- Double wheel D50-D10 for insertion in the central hole with a diameter of 10 mm
- Double wheel D50-M8 for bolting in the profile slot

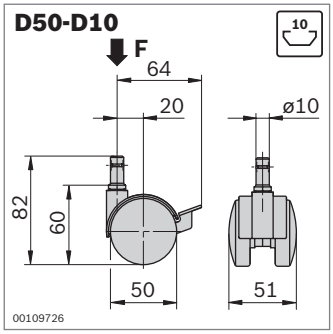

Double wheel	F (N)	ESD		No.
D50-D10	400		4	**3 842 515 457**
	400	1)	4	**3 842 515 459**

1) Conduction resistance ≤ 10^6 Ω

Material: Housing, wheel, lock: PA; black
Running surface: PU (not with ESD version)
Fastening material: Steel; galvanized

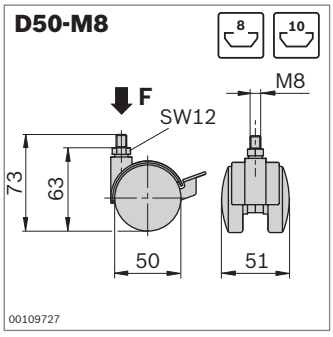

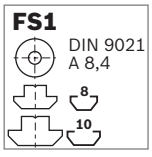

Double wheel	F (N)	ESD		No.	FS
D50-M8	400		4	**3 842 535 669**	FS1
	400	1)	4	**3 842 535 670**	FS1

1) Conduction resistance ≤ 10^6 Ω

Material: Housing, wheel, lock: PA; black
Running surface: PU (not with ESD version)
Fastening material: Steel; galvanized

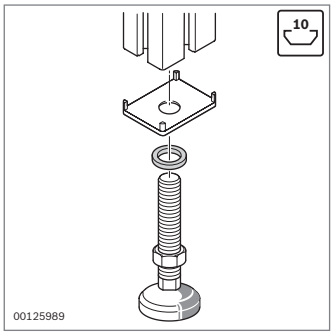

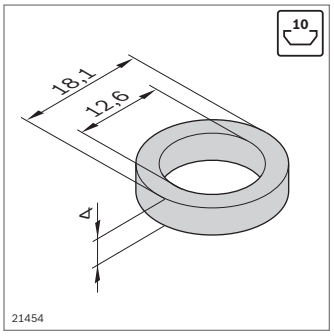

Bearing ring

- For cover caps with hole in the sizes 40x40, 45x45,50x50 and 60x60
- For M12 threads
- To protect the cover caps when tightening accessories

Bearing ring		No.
	100	**3 842 555 653**

Material: Diecast zinc









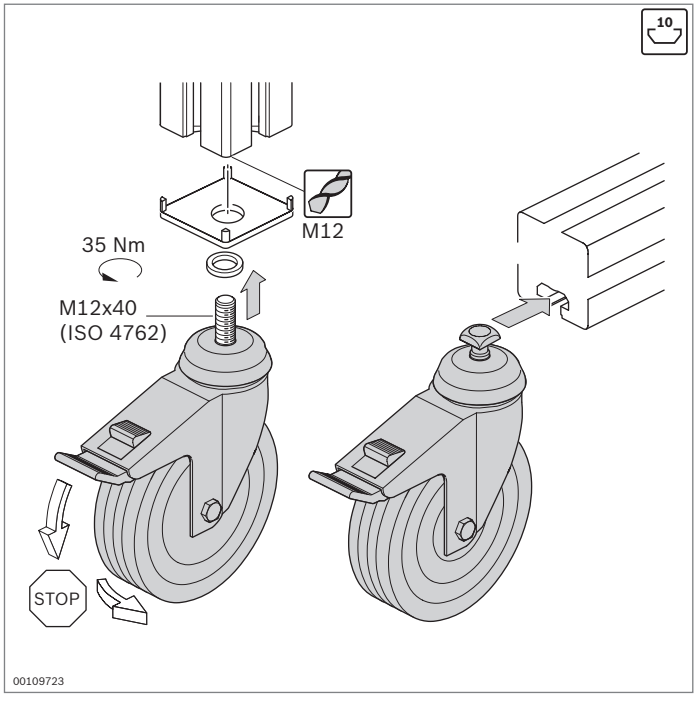

Wheel

- Impressive versatility
- Wheels with excellent running properties
- Available as a castor wheel with lock, a castor wheel, and a trestle roller

Especially gentle on floors

Resistant to oil, suitable for workshop floors

Clean Room — Suitable for use in clean rooms. Conductive material version in accordance with DIN EN 61340-5-1; conduction resistance 10^3 to 10^8 Ω

Rubber running surface made of solid rubber with good deformation elasticity. No permanent flattening of the wheel due to it traveling over edges or not being moved for long periods

Suitable for ESD-sensitive areas. Conductive material version in accordance with DIN EN 61340-5-1; conduction resistance ≤ 10^6 Ω

- Mounting of all wheel in the profile slot or central hole (accessories required)
- Profile finishing: Thread cutting M12 for assembly in central hole

Required accessories:

- Screw M12x40 (ISO 4762) for mounting in central hole (↻ 35 Nm)
- Bearing ring if cover cap with hole is used (p. 6-16)

Wheel selection guide

				
Tread	**Thermoplastic rubber**	**Polyamide 6**	**Solid rubber**	**Polyurethane**
ESD	yes / no (either possible)	no	yes	yes
Tread hardness	85° shore A	70° shore D	80° shore A	94° shore A
Temperature resistance	–20 °C ... +60 °C	–25 °C ... 80 °C	–20 °C ... +60 °C	–20 °C ... +60 °C
Rolling resistance	very good	outstanding	good	very good
Travel noise	good	satisfactory	very good	good
Floor protection	good	satisfactory	very good	good
Deformation elasticity Tread	satisfactory	adequate	very good	good
Tread color	gray	black	black	gray
Makes no track marks	yes	yes	no	yes

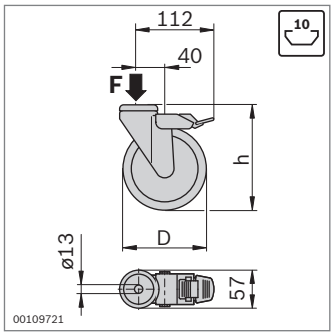

FS1



M12X30

DIN 985
M12

- Castor wheel with lock: Lock prevents the wheel from rolling or turning

Castor wheel with lock	F (N)	D (mm)	h (mm)	ESD	No.	FS
	900	80	108		**3 842 541 226**	FS1
	1100	125	158		**3 842 541 228**	FS1
	900	80	108	⚠	**3 842 541 230**	FS1
	1100	125	158	⚠	**3 842 541 232**	FS1
	1100	125	158		**3 842 515 367**	FS1
Clean Room	1000	125	158	⚠	**3 842 524 499**	FS1
	600	80	108	⚠	**3 842 547 836**	FS1
	800	125	158	⚠	**3 842 547 838**	FS1

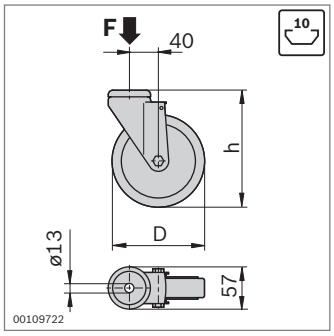

FS1

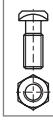

M12X30

DIN 985
M12

Castor wheel	F (N)	D (mm)	h (mm)	ESD	No.	FS
	900	80	108		**3 842 541 234**	FS1
	1100	125	158		**3 842 541 236**	FS1
	900	80	108	⚠	**3 842 541 238**	FS1
	1100	125	158	⚠	**3 842 541 240**	FS1
	1100	125	158		**3 842 515 366**	FS1
Clean Room	1000	125	158	⚠	**3 842 524 500**	FS1
	600	80	108	⚠	**3 842 547 835**	FS1
	800	125	158	⚠	**3 842 547 837**	FS1

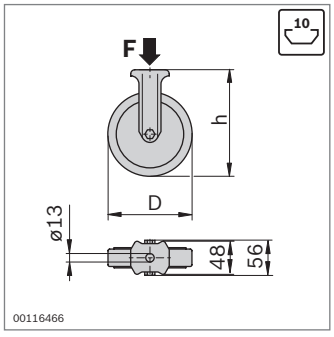

FS1

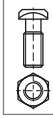

M12X30

DIN 985
M12

Trestle roller	F (N)	D (mm)	h (mm)	ESD	No.	FS
	900	80	108	⚠	**3 842 541 242**	FS1
	1100	125	158	⚠	**3 842 541 244**	FS1
	600	80	108	⚠	**3 842 547 839**	FS1
	800	125	158	⚠	**3 842 547 840**	FS1

Material:

- Thermoplastic rubber
- Reinforced PA
- Clean Room: Gray PU, housing: Steel, chrome-plated
- Solid rubber
- ⚠: Conductive, conduction resistance ≤10^6 Ω

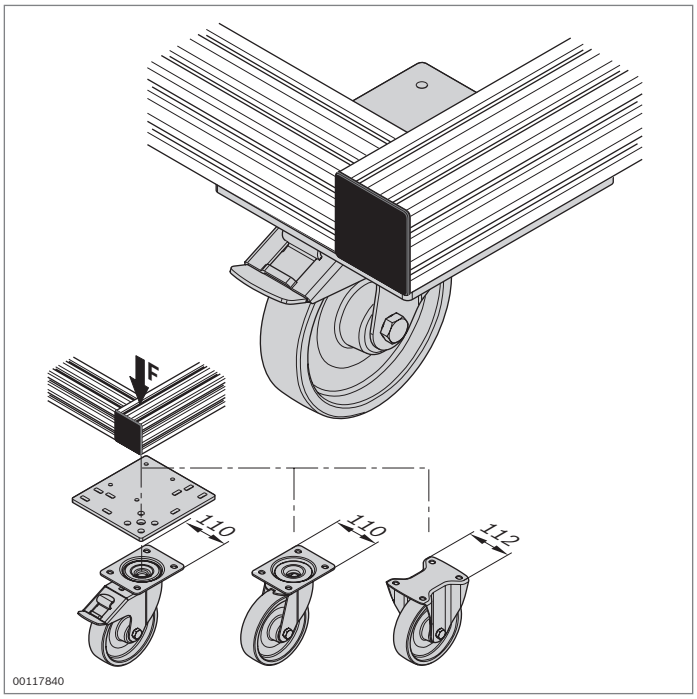

Heavy-duty wheel

10

- Heavy-duty wheel with mounting flange
- Available as a castor wheel with lock, a castor wheel, and a trestle roller
- Heavy-duty, particularly suited for workshop applications
- Wheels with excellent running properties

Required accessories:

- Screw M10x16 (ISO 4762), washer ISO 7089-10, lock washer 10FSt for fastening to the screw-on plate
- T-bolt, flange nut, central bolt M12 or S12 for fastening the screw-on plate to the profile frame

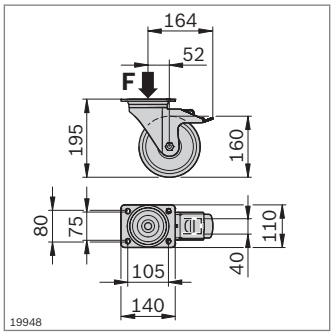

Castor wheel with lock		F (N)	No.
		3000	**3 842 536 736**
Material:	Housing: Steel; galvanized Wheel: TPU		

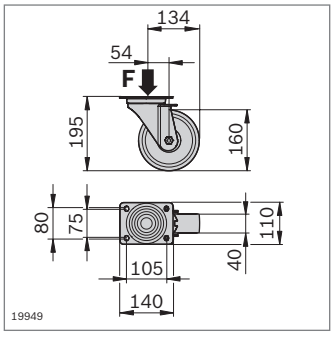

Castor wheel		F (N)	No.
		3000	**3 842 536 737**
Material:	Housing: Steel; galvanized Wheel: TPU		

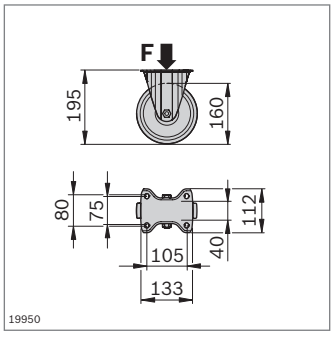

Trestle roller		F (N)	No.
		3000	**3 842 536 738**
Material:	Housing: Steel; galvanized Wheel: TPU		

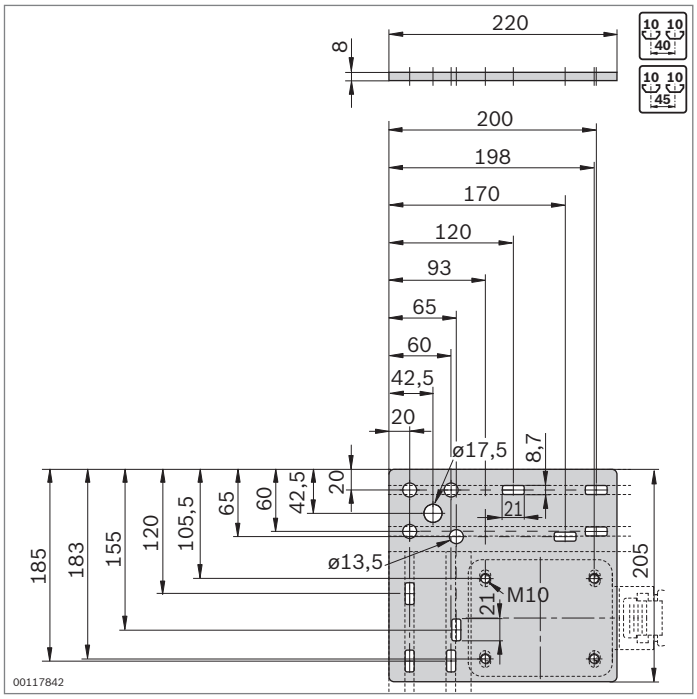

- Screw-on plate for attachment to 40 mm or 45 mm profiles

Screw-on plate		No.
	4	**3 842 536 701**
Material:	Steel; galvanized	

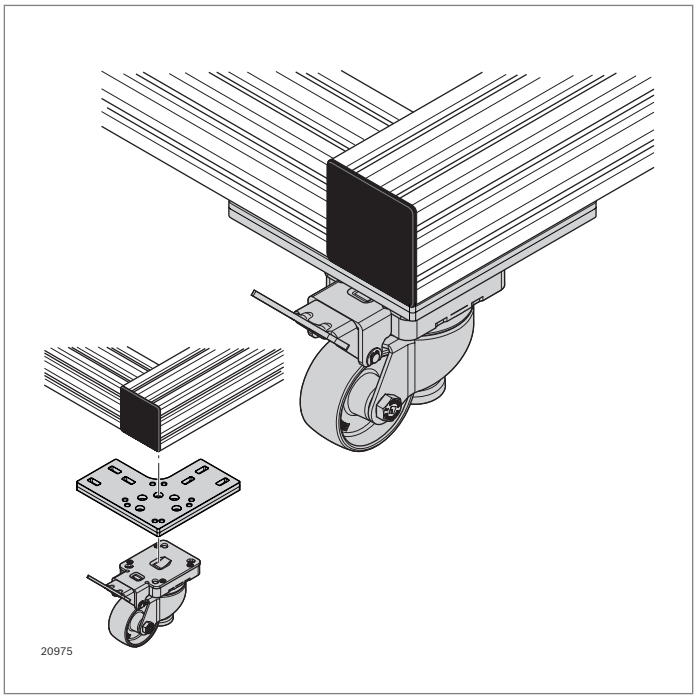

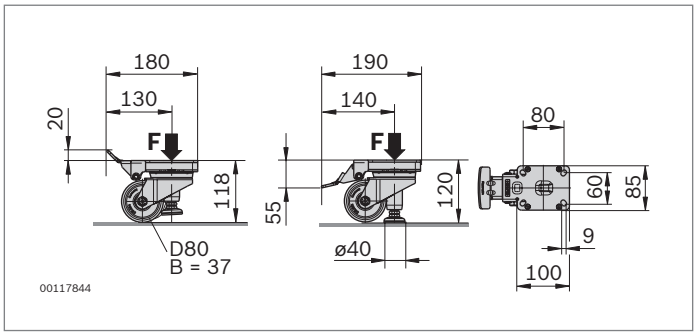

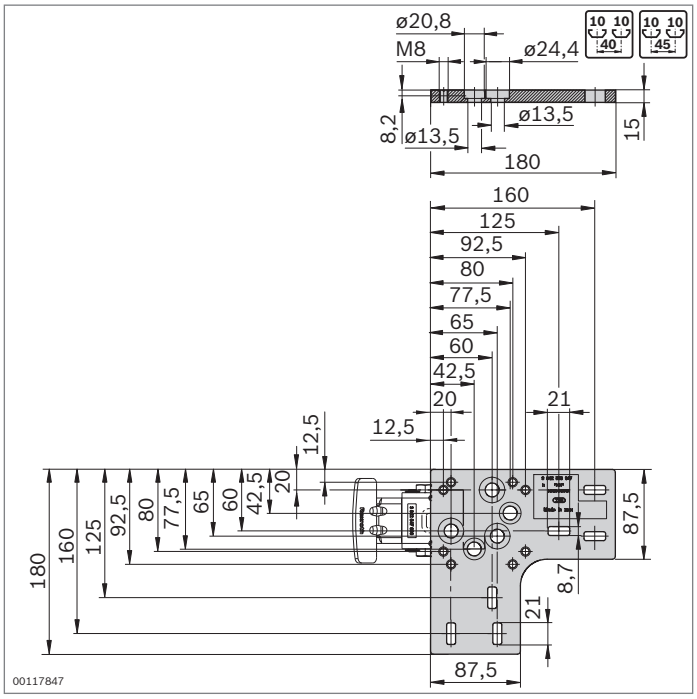

Lifting wheel

10

- Steerable lifting wheel
- The wheel turns into a stable base simply by engaging the stop lever
- Screw-on plate for mounting the lifting wheel
- With “Ideal-Stop”: Locking lever does not swivel with the castor wheel but remains in the defined position. The locking lever is fixed in position on the frame by means of the screw-on plate, and the castor wheel moves freely

Required accessories:

- Screw M8x35 (ISO 4762), washer 8 (DIN EN ISO 7089), locking washer 8 FSt for attaching to the screw-on plate
- T-bolt M8x30 (p. 3-6), flange nut M8 (p. 3-6), central bolt M12 or S12 (p. 3-41) for fastening to the screw-on plate on the profile frame

Lifting wheel		**F** (N)	**No.**
		2300	**3 842 547 890**
Material:	Wheel: PA6, natural white Housing: Steel; galvanized Base plate: Rubber, gray		

Screw-on plate			**No.**
		4	**3 842 553 967**
Material:	Diecast aluminum		

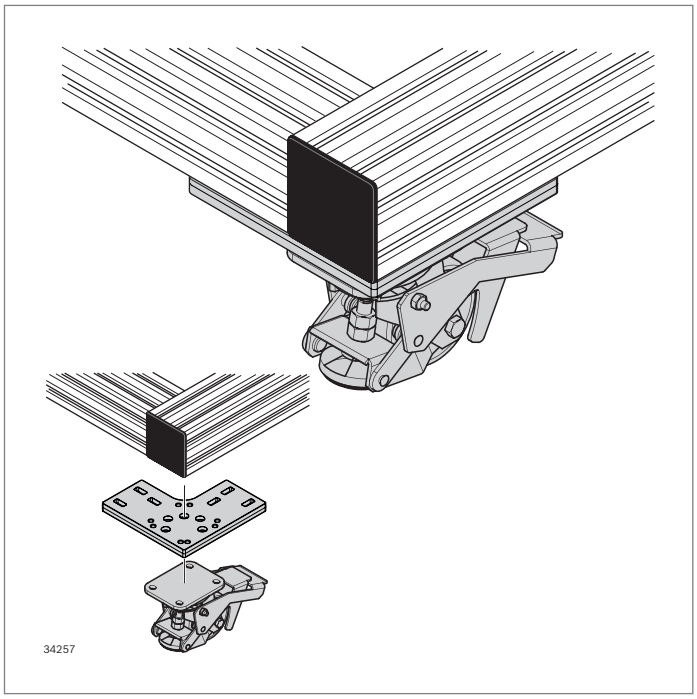

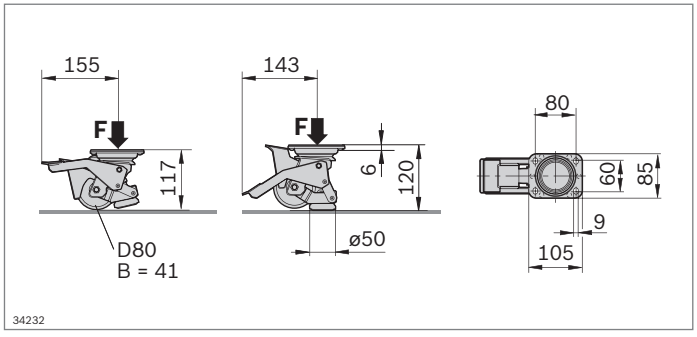

Lifting wheel - rotatable pedal



- Steerable lifting wheel
- The wheel turns into a stable base simply by engaging the stop lever
- The locking lever moves with the wheel
- The locking lever can be moved under the frame if necessary

Required accessories:

- Screw M8x20 (ISO 4762), washer 8 (DIN EN ISO 7089), locking washer 8 FSt for attaching to the screw-on plate
- Screw-on plate 3 842 553 967 (p. 6-22)
- Flange head screw similar to ISO 7380-2 10.9 M8x25, however, Torx 40 (tightening torque 25 Nm), T-nut 10 M8 (p. 3-4), central bolt M12 or S12 (p. 3-41) for fastening the screw-on plate at the profile frame

Lifting wheel		**F** (N)	**No.**
Rotatable pedal		2000	**3 842 555 610**
Material:	Wheel: PA6, natural white Housing: Steel; galvanized Base plate: PA; rubber black		

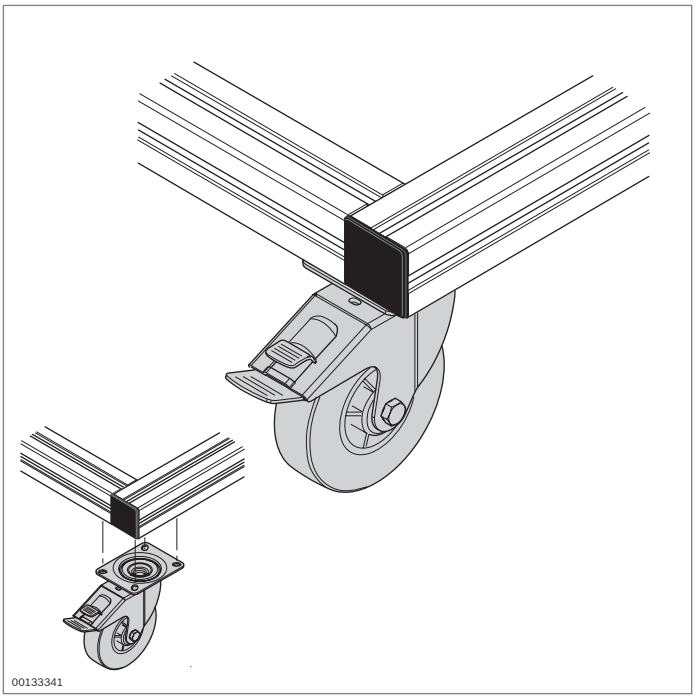

Roller with mounting flange

10

- Robust rollers with mounting flange
- Excellent running properties, particularly suitable for workshop floors
- Available as a castor wheel with lock and as a trestle roller
- Castor wheel with lock: Lock prevents the wheel from rolling or turning

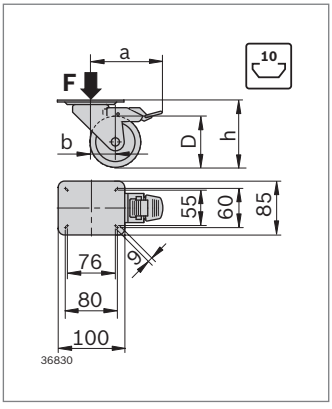

Castor wheel	F (N)	D (mm)	h (mm)	a (mm)	b (mm)	No.
	600	100	125	113	36±2	**3 842 259 790**
	900	125	150	123	40±2	**3 842 259 791**

Material: Wheel: Solid rubber
Rims: Polypropylene
Housing: Sheet steel; galvanized

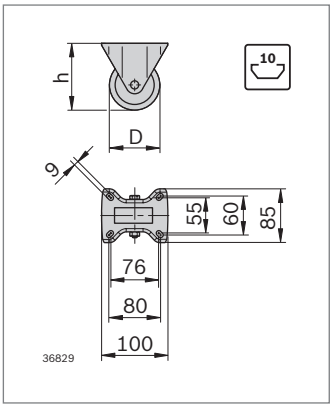

Trestle roller	F (N)	D (mm)	h (mm)	No.
	600	100	125	**3 842 259 792**
	900	125	150	**3 842 259 793**

Material: Wheel: Solid rubber
Rims: Polypropylene
Housing: Sheet steel; galvanized

FS1
ISO 4762
M8x16
8-FSt
DIN 125, 8,4
M8 10

- For castor and trestle roller

Mounting kit	No.	FS
	3 842 259 794	3xFS1

Mounting of panel elements

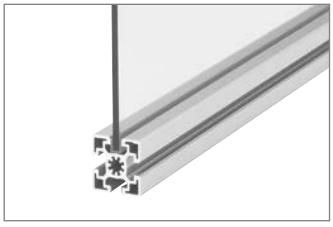

Mounting rim profile
(p. 7-2)



Mounting rim profile cleanroom (p. 7-3)



Protective pane profile, PVC (p. 7-4)

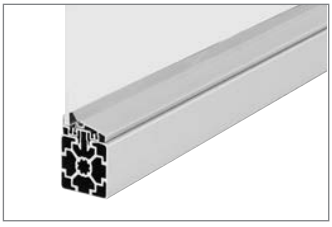

Protective pane profile for cleanroom (p. 7-5)

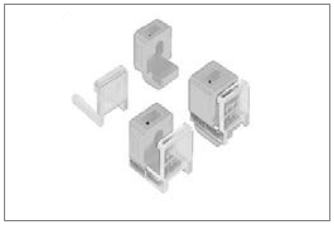

Variofix block (p. 7-6)
Variofix block S (p. 7-7)



Bracket S (p. 7-8)



Retainer ring (p. 7-9)



Screw bar profile (p. 7-10)

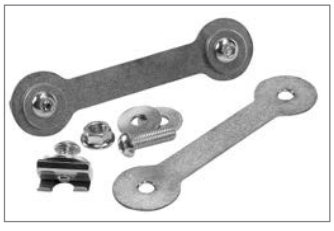

Potential equalizer
(p. 7-11)



Protective grille profile
(p. 7-12)



Clamp bushing (p. 7-13)

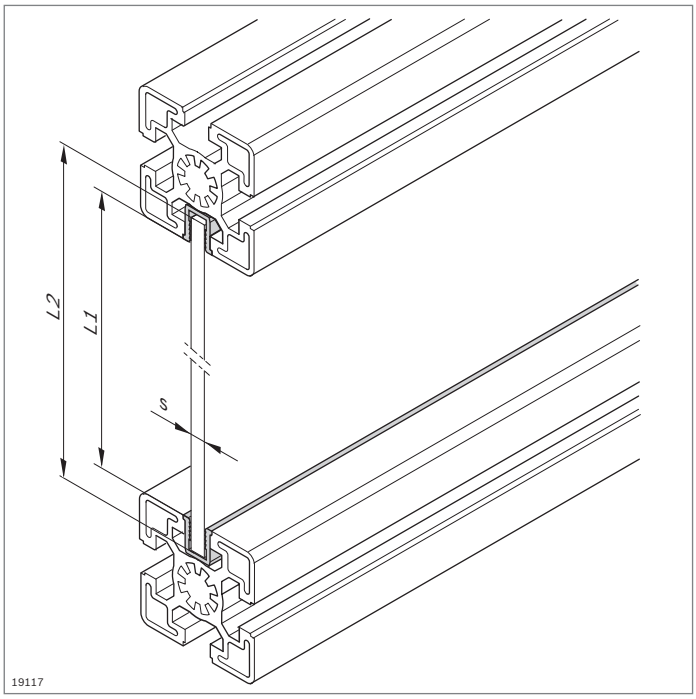

Mounting rim profile



- For the play-free mounting of panel elements in the profile slot
- For panel elements up to 6 mm thick
- Installation during frame assembly
- Mounting rim profile PP can also be used as a cover profile

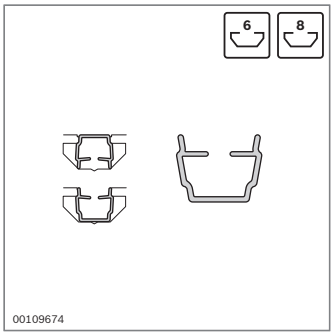

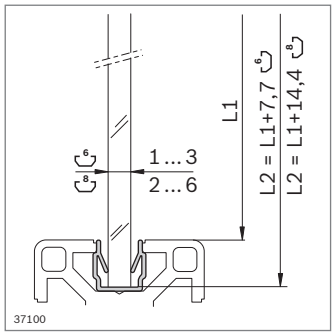

Mounting rim profile	Slot	s (mm)	L (mm)	No.
	6	1 ... 3	2000	**3 842 555 272**
	8	2 ... 6	2000	**3 842 555 274**
Material:	PP; signal gray RAL 7004			

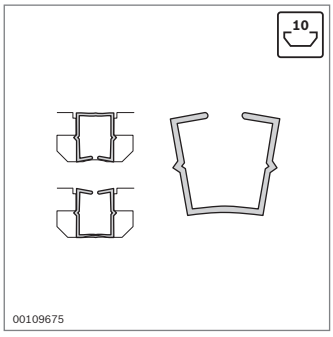

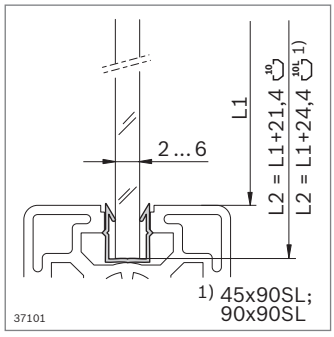

Mounting rim profile	Slot	s (mm)	L (mm)	No.
	10	2 ... 6	2000	**3 842 555 276**
Material:	PP; signal gray RAL 7004			

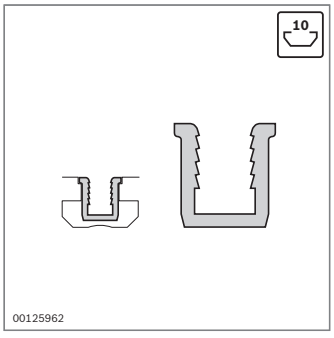

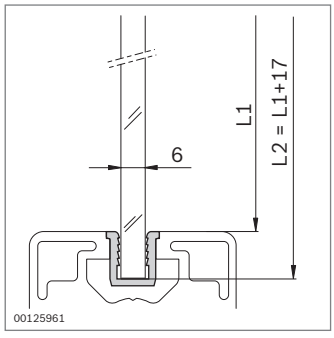

Mounting rim profile	Slot	s (mm)	L (mm)	No.
	10	6	2000	**3 842 555 270**
Material:	PE; signal gray RAL 7004			

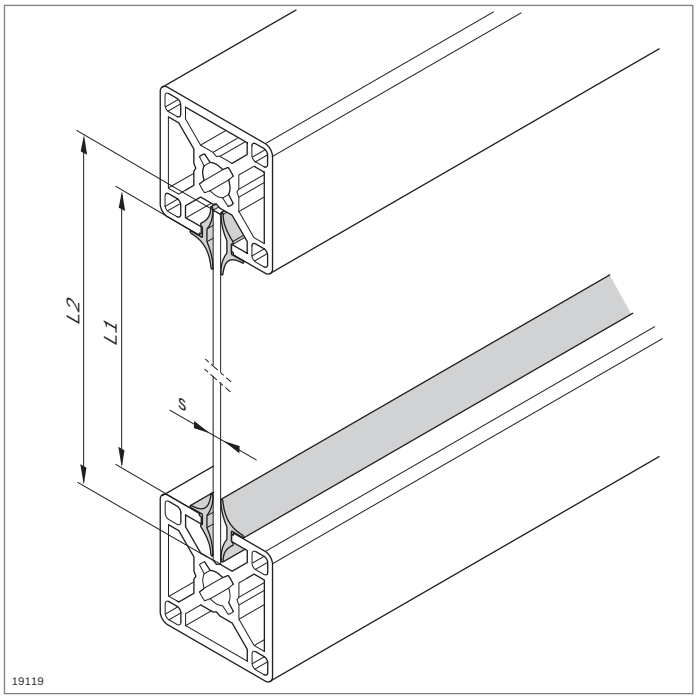

Mounting rim profile, cleanroom



- For the play-free mounting of panel elements in the profile slot
- For panel elements with a thickness of 2 ... 8 mm
- For use on one or two sides of the mounting rim profile, depending on the panel element thickness
- Installation during profile frame assembly
- Can be used under cleanroom conditions
- Checked for emission of volatile organic substances at room temperature, 50 °C and 120 °C, Report No. BO 9903-160

7



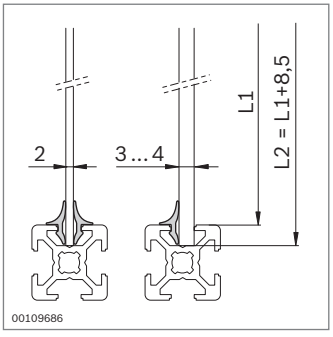

Mounting rim profile, Clean	Slot	s (mm)	L (mm)	No.
	6	2 ... 4	10000	**3 842 523 493**
Material:	TPE, light gray RAL 7035			



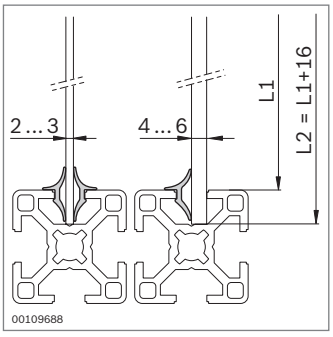

Mounting rim profile, Clean	Slot	s (mm)	L (mm)	No.
	8	2 ... 6	10000	**3 842 523 494**
Material:	TPE, light gray RAL 7035			

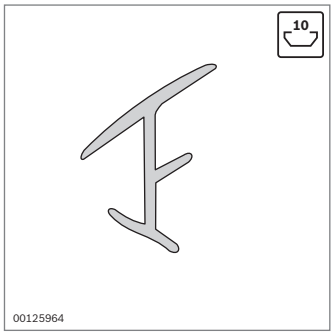

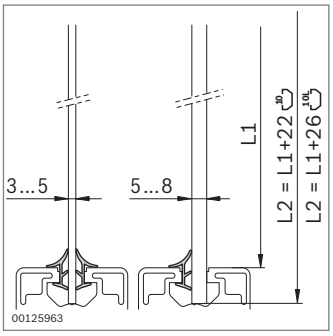

Mounting rim profile, Clean	Slot	s (mm)	L (mm)	No.
	10	3 ... 8	10000	**3 842 555 282**
Material:	TPE; signal gray RAL 7004			

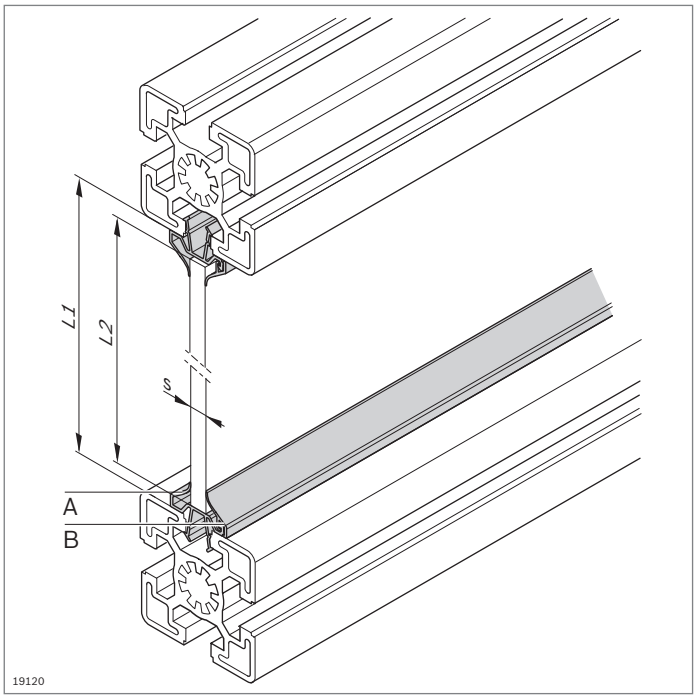

Protective pane profile PVC



- For the play-free mounting of panel elements
- For panel elements with a thickness of 1.5 ... 8 mm
- For subsequent installation in closed frame constructions
- Installation of panel elements at center of slot
- The protective pane profile consists of the basic profile (**A**) and the clip strip (**B**)
- With lip seals to protect the working space from splashing liquids

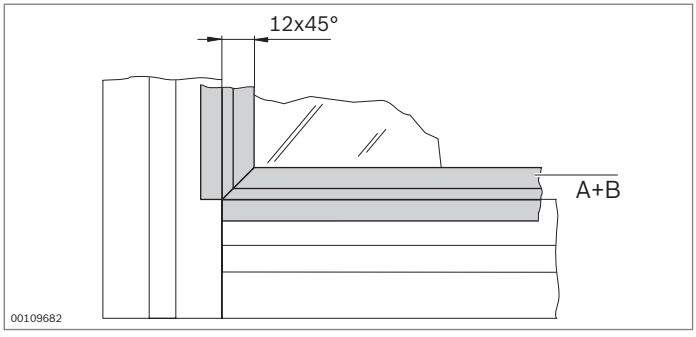

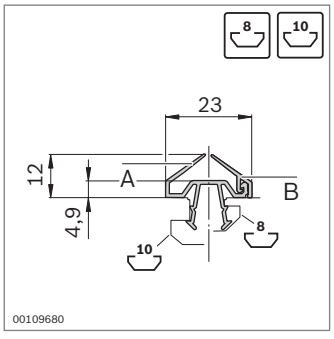

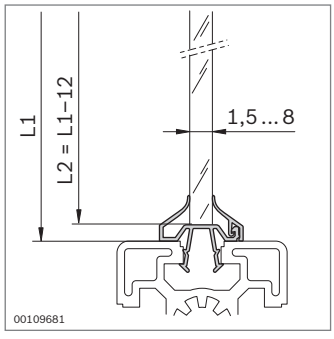

Protective pane profile PVC		Slot	s (mm)	L (mm)		No.
A	Basic profile	8, 10	1.5 ... 8	2000	10	**3 842 555 284**
B	Clip strip	8, 10	1.5 ... 8	2000	10	**3 842 555 286**

Material: PVC; signal gray RAL 7004

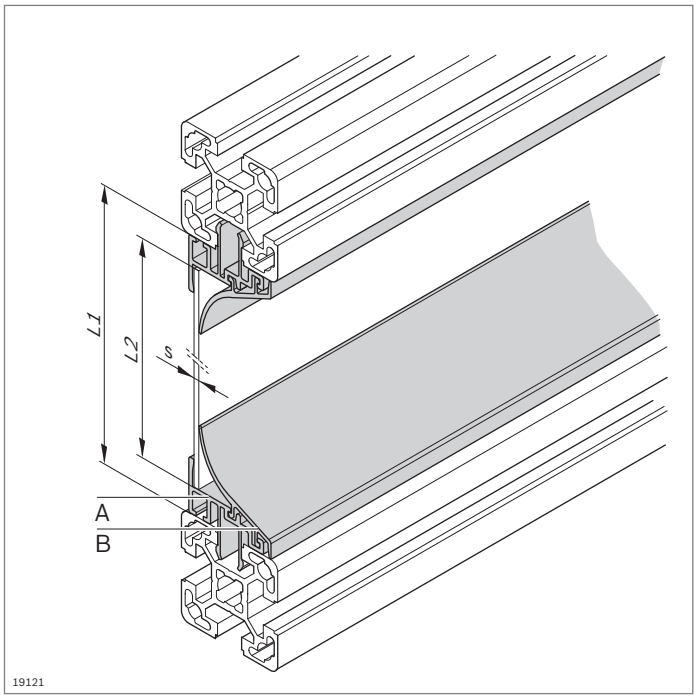

Protective pane profile cleanroom



- For the play-free mounting of panel elements
- For panel elements with a thickness of 2 ... 8 mm
- For subsequent installation in closed frame constructions
- Installation of panel elements flush with the profile edge
- The protective pane profile consists of the basic profile (**A**) and the clip-on strip (**B**). Both profiles are required for proper functioning.
- Can be used under cleanroom conditions
- Checked for emission of volatile organic substances at room temperature, 50 °C and 120 °C, Report No. BO 9903-161

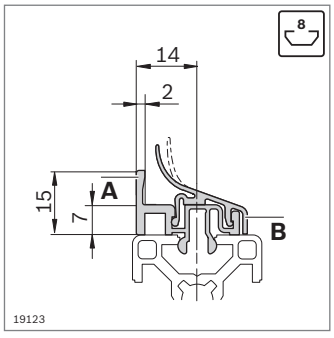

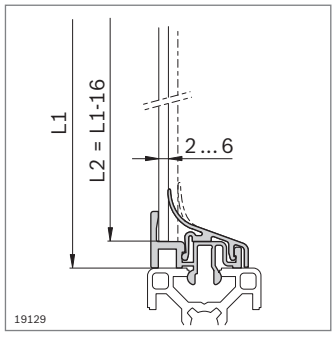

Protective pane profile		Slot	s (mm)	L (mm)		No.
A	Basic profile	8	2 ... 6	2000	10	**3 842 524 025**
B	Clip strip	8	2 ... 6	2000	10	**3 842 555 288**

Material: Basic profile: Aluminum; anodized
Clip strip: PP/TPE; signal gray RAL 7004

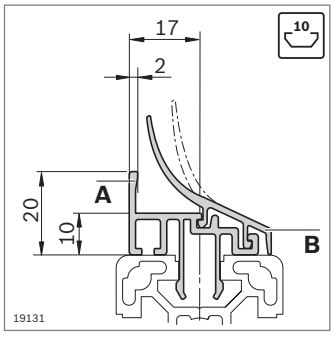

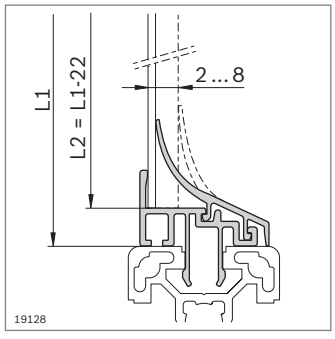

Protective pane profile		Slot	s (mm)	L (mm)		No.
A	Basic profile	10	2 ... 8	2000	10	**3 842 529 761**
B	Clip strip	10	2 ... 8	2000	10	**3 842 555 292**

Material: Basic profile: Aluminum; anodized
Clip strip: PP/TPE; signal gray RAL 7004

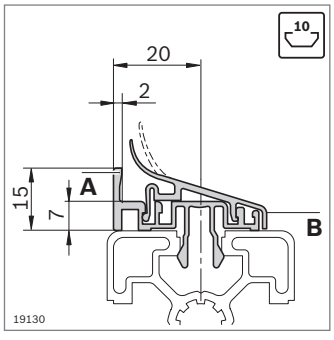

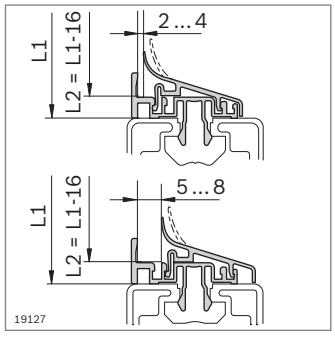

Protective pane profile		Slot	s (mm)	L (mm)		No.
A	Basic profile	10	2 ... 8	2000	10	**3 842 524 027**
B	Clip strip	10	2 ... 8	2000	10	**3 842 555 290**

Material: Basic profile: Aluminum; anodized
Clip strip: PP/TPE; signal gray RAL 7004

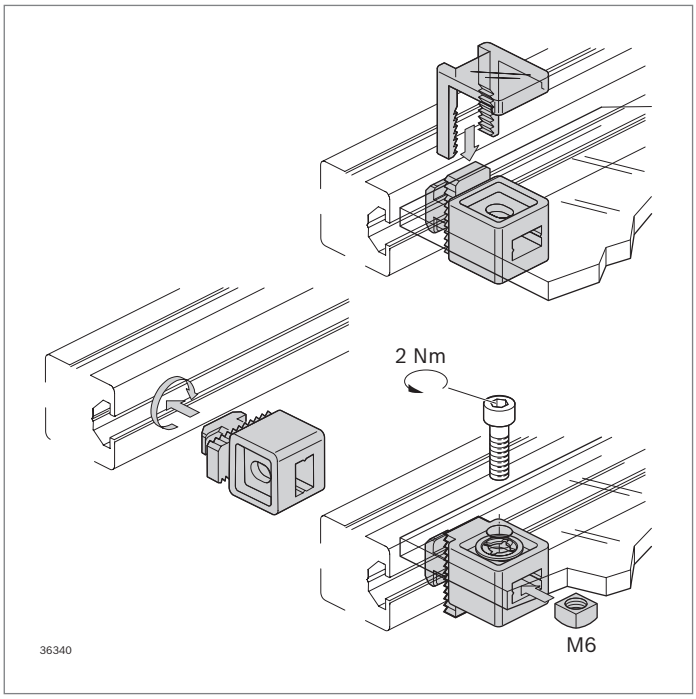

Variofix block



- For panel elements up to 13 mm thick
- For subsequent installation in closed frame constructions
- Asymmetrical form enables fastening of panel elements in two different positions
- Clamping via snap-in clip or screw fitting with square nut M6 (included in scope of delivery) and screw
- Retainer ring for connecting the screw to the panel element (Machinery Directive 2006/42/EC)

Accessories:

- Variofix remover (p. 14-6)
- Screw for fitting with square nut

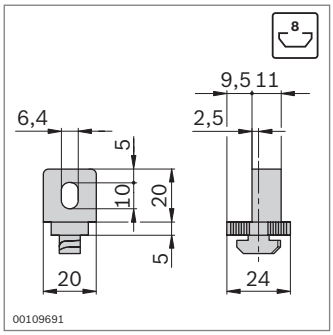

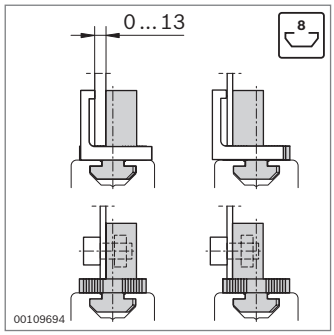

Variofix block	Slot		No.
	8	10	**3 842 548 832**
Material:	PP; signal gray RAL 7004 Square nut: Steel; galvanized		
Scope of delivery:	Incl. square nut		

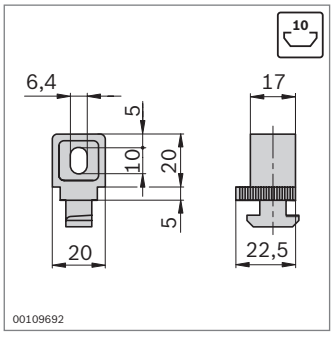

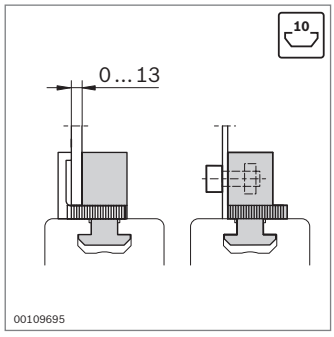

Variofix block	Slot		No.
	10	10	**3 842 548 834**
Material:	PP; signal gray RAL 7004 Square nut: Steel; galvanized		
Scope of delivery:	Incl. square nut M6, retainer ring M6		

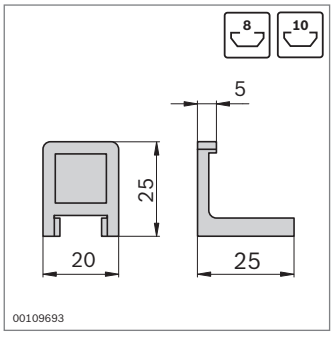

Snap-in clip		No.
	10	**3 842 184 738**
Material:	PA; colorless	

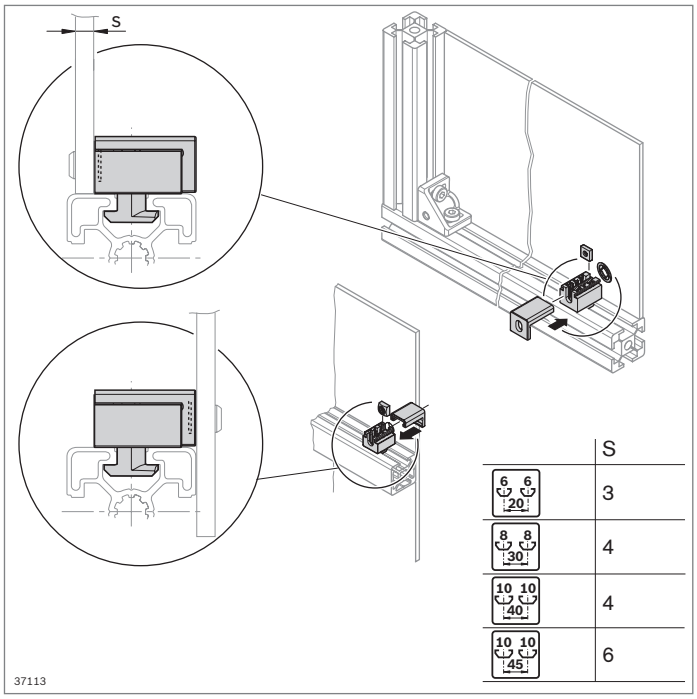

	S
6 6 20	3
8 8 30	4
10 10 40	4
10 10 45	6

Variofix block S



- For virtually gap-free panel element mounting
- For subsequent installation in closed frame constructions
- The asymmetrical design and cover cap enable variable mounting positions for the panel elements: flush with the profile edge or situated in front of the profile
- Retainer ring for connecting the screw to the panel element (Machinery Directive 2006/42/EC)

Required accessories:
Screw for fastening the panel element

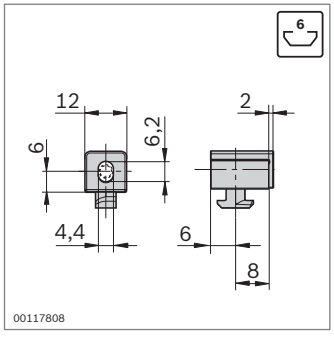

Variofix block S	Slot		No.
	6	10	**3 842 548 836**
Material:	PP; signal gray RAL 7004 Square nut: Steel; galvanized		
Scope of delivery:	Incl. square nut M4, cap		

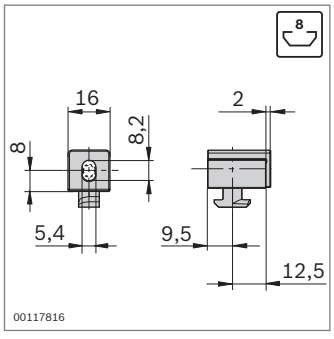

Variofix block S	Slot		No.
	8	10	**3 842 548 838**
Material:	PP; signal gray RAL 7004 Square nut: Steel; galvanized		
Scope of delivery:	Incl. square nut M5, cap, retainer ring		

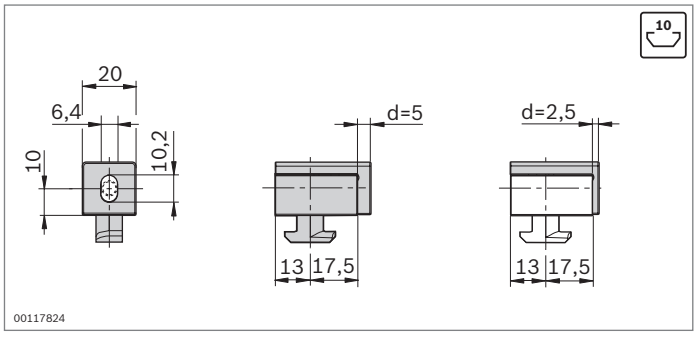

Variofix block S	Slot		No.
	10	10	**3 842 548 840**
Material:	PP; signal gray RAL 7004 Square nut: Steel; galvanized		
Scope of delivery:	Incl. square nut M5, 2 x cap (d = 2.5 mm; d = 5 mm), retainer ring		

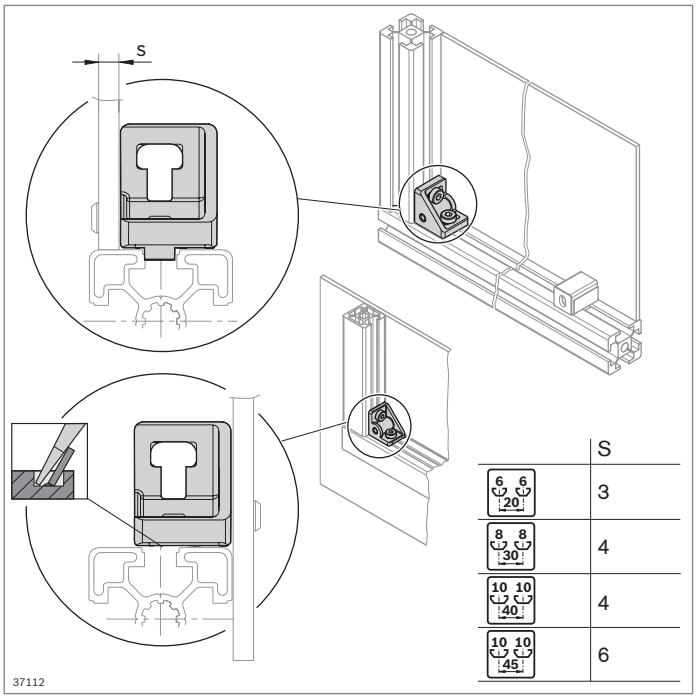

	S
6 6 20	3
8 8 30	4
10 10 40	4
10 10 45	6

Bracket S



- Bracket with thread for virtually gap-free mounting of panel elements
- For subsequent installation in closed frame constructions
- Panel elements can be mounted in different positions: flush with the profile edge or situated in front of the profile (by breaking off the centering lug)

Required accessories:
Screw for fastening the panel element
Optional accessories:
- Variofix block S (p. 7-7)
- Retainer ring (p. 7-9)

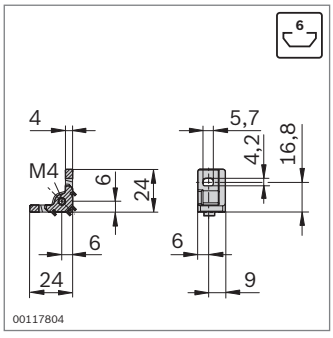

FS1

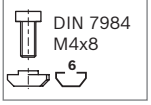

Bracket S	Slot		No.	FS
20x20	6	20	**3 842 536 489**	
20x20 set	6	1	**3 842 536 670**	2xFS1

Material: Diecast aluminum
Fastening material: Steel; galvanized
Scope of delivery: Set incl. fastening material (FS)

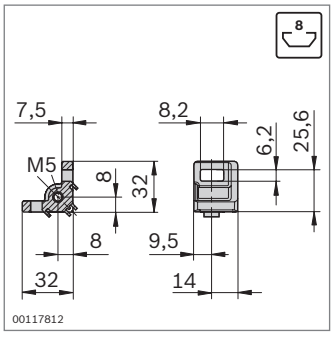

FS2

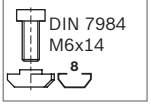

Bracket S	Slot		No.	FS
30x30	8	20	**3 842 536 490**	
30x30 set	8	1	**3 842 536 671**	2xFS2

Material: Diecast aluminum
Fastening material: Steel; galvanized
Scope of delivery: Set incl. fastening material (FS)

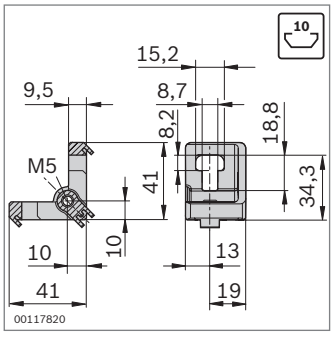

FS3

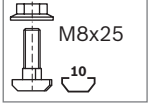

Bracket S	Slot		No.	FS
40/45	10	20	**3 842 536 491**	
40/45 set	10	1	**3 842 536 672**	2xFS3

Material: Diecast aluminum
Fastening material: Steel; galvanized
Scope of delivery: Set incl. fastening material (FS)

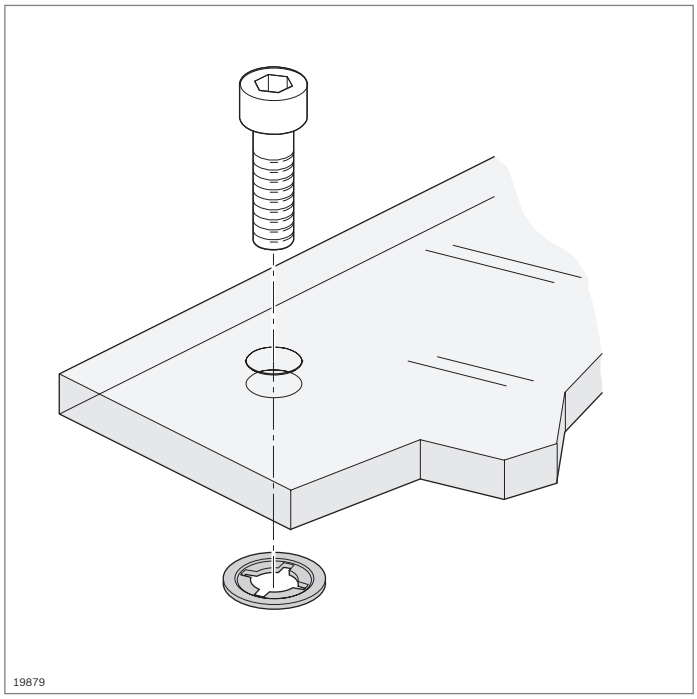

Retainer ring

- Secures the fastening screw to the panel element
- For use with all Variofix blocks, but not for the S bracket
- Can be retrofitted
- For various thread sizes

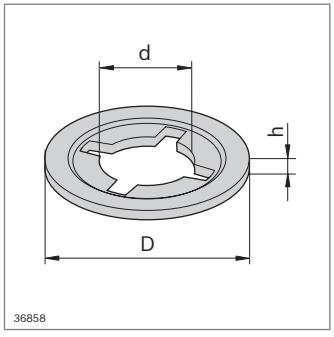

Retainer ring	D (mm)	d (mm)	h (mm)		No.
M4	9.0	3.4	1.0	100	**3 842 542 328**
M5	10.0	4.5	1.0	100	**3 842 542 329**
M6	12.5	5.5	1.5	100	**3 842 542 330**
Material:	PA; black				

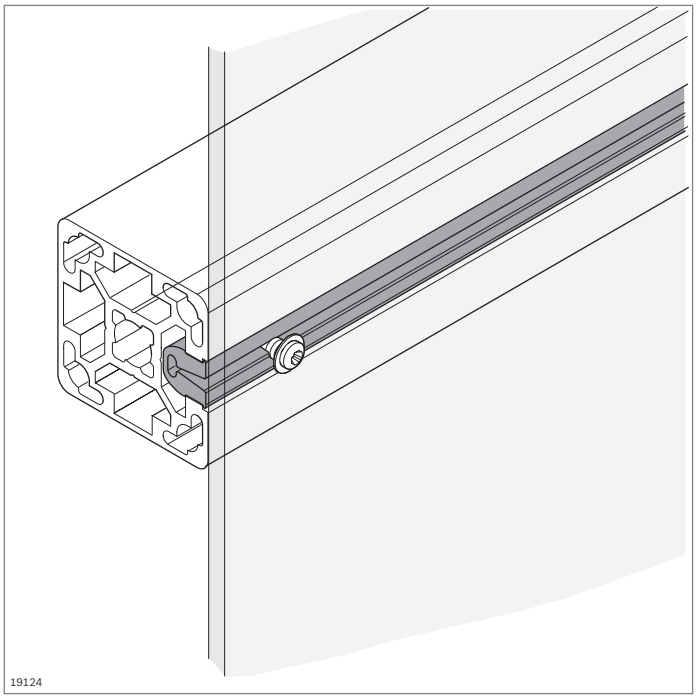

Screw bar profile



- Screw bar profile for fastening panel elements using commercially available sheet metal screws
- Clipping the screw bar profile into the profile slot
- Low-cost connection element

Required accessories:
Sheet metal screws for fastening panel elements

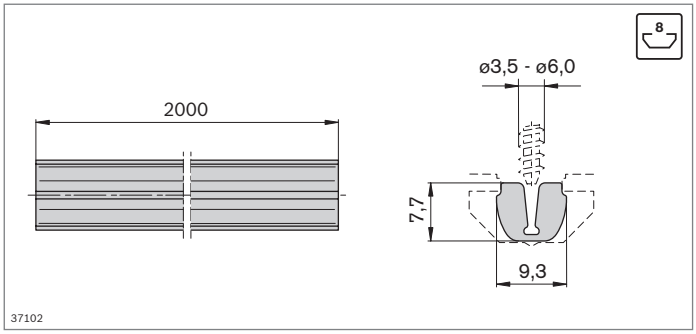

Screw bar profile	Slot	L (mm)	No.
	8	2000	**3 842 555 550**
Material:	PVC; signal gray RAL 7004		

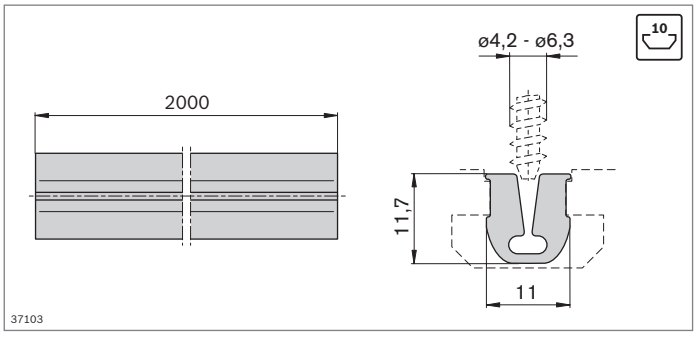

Screw bar profile	Slot	L (mm)	No.
	10	2000	**3 842 555 552**
Material:	PVC; signal gray RAL 7004		

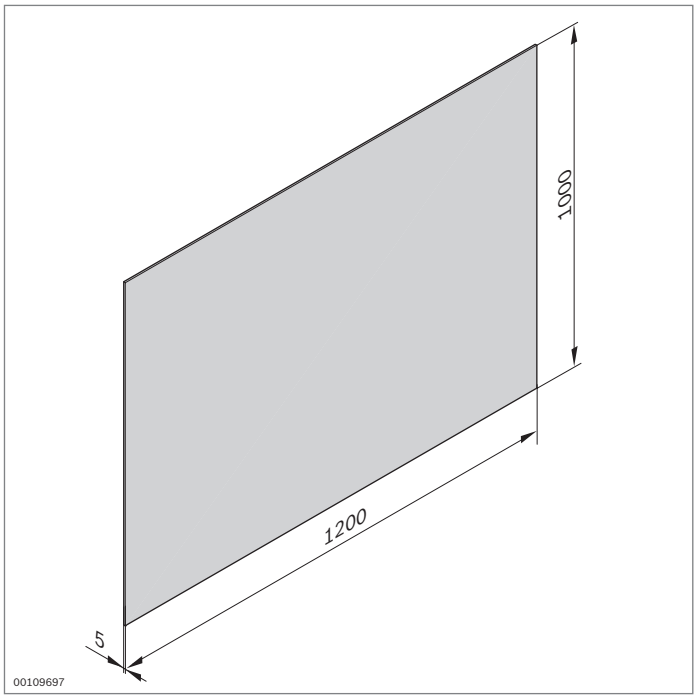

Universal plate

- For the construction of trays, material shuttles, or privacy shields on tables or frames

Accessories:
Frame profile, mounting of panel elements

Universal plate	ESD	No.
PP		**3 842 516 837**
SB	ESD	**3 842 516 838**

Material: PP: gray, smooth on one side, grained on the other
SB: black, smooth on both sides

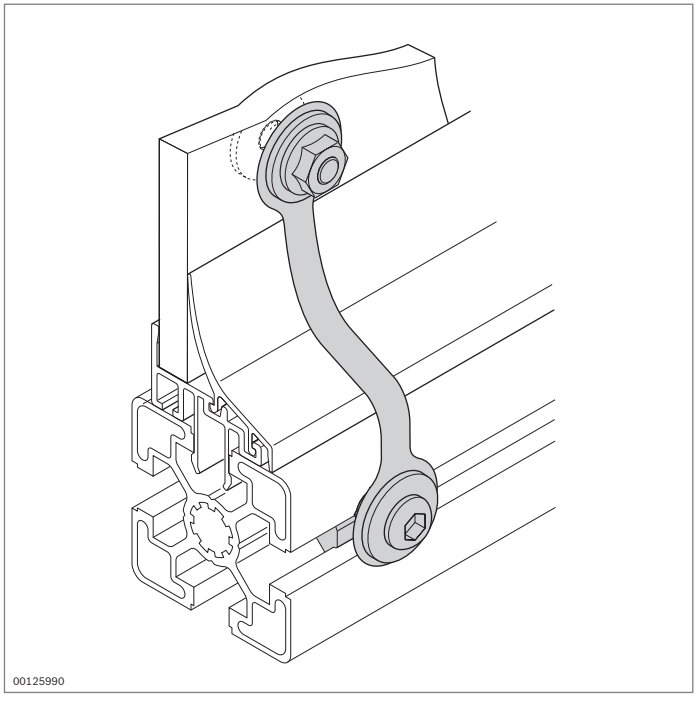

Potential equalizer

- Potential equalizer for creating electrostatic conduction between panel elements and strut profiles

Potential equalizer	ESD		No.	FS
	ESD	10	**3 842 536 148**	FS1, FS2

Material: Strip: Steel, stainless
Fastening material: Steel; galvanized
Scope of delivery: Incl. fastening material (FS)

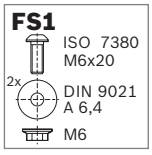

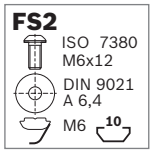

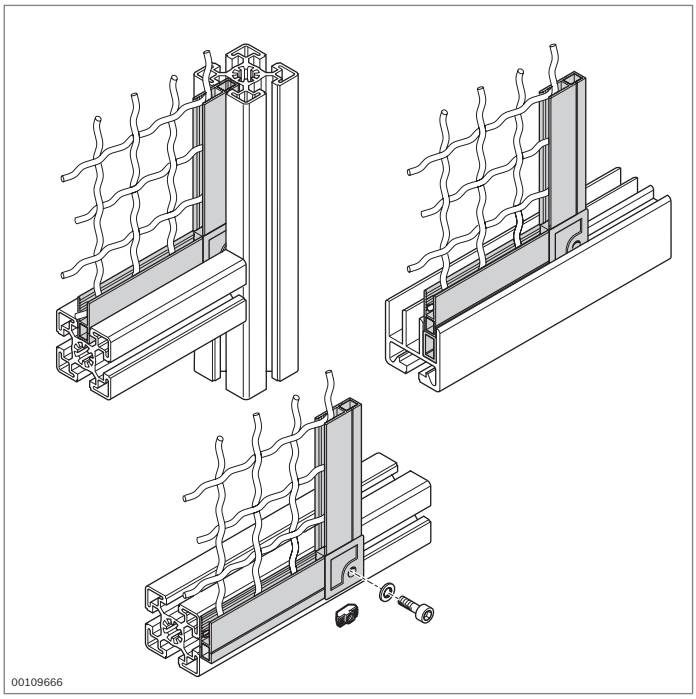

Protective grille profile

10

- For constructing frames for woven wire grilles or panel elements
- For woven wire grilles with a wire diameter up to 3.1 mm
- For panel elements up to 6 mm thick
- Screw fitting of frame to the outside of strut profiles (subsequent installation)
- Insertion of frame into the slot of a strut profile or a sliding door profile Al 45
- Corner pieces for inner and outer corners

Optional accessories:

- T-nut M6 (p. 3-4)
- Screw M6

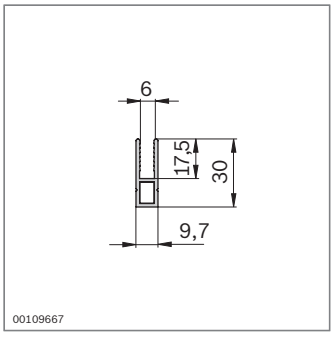

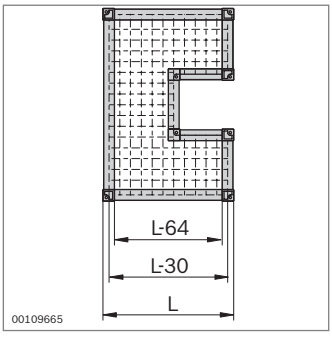

Protective grille profile	L (mm)		No.
	3000[1]	20	**3 842 305 766**

[1] Due to the (anodic oxidation) contact points produced in the manufacturing process, supplied in profile length of 3100 mm

Material: Aluminum, black anodized

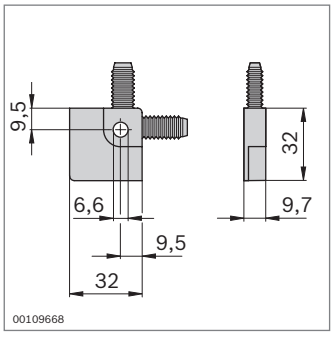

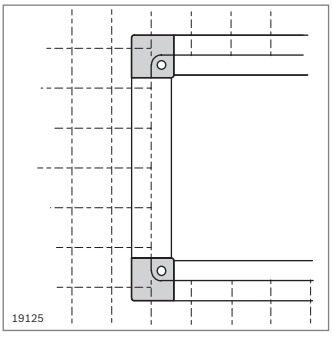

Inner corner piece		No.
	20	**3 842 305 768**

Material: PA; black

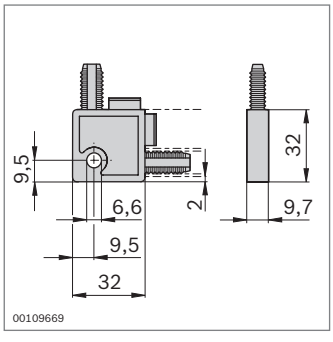

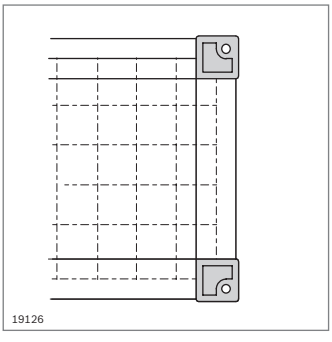

Outer corner piece		No.
	20	**3 842 305 767**

Material: PA; black

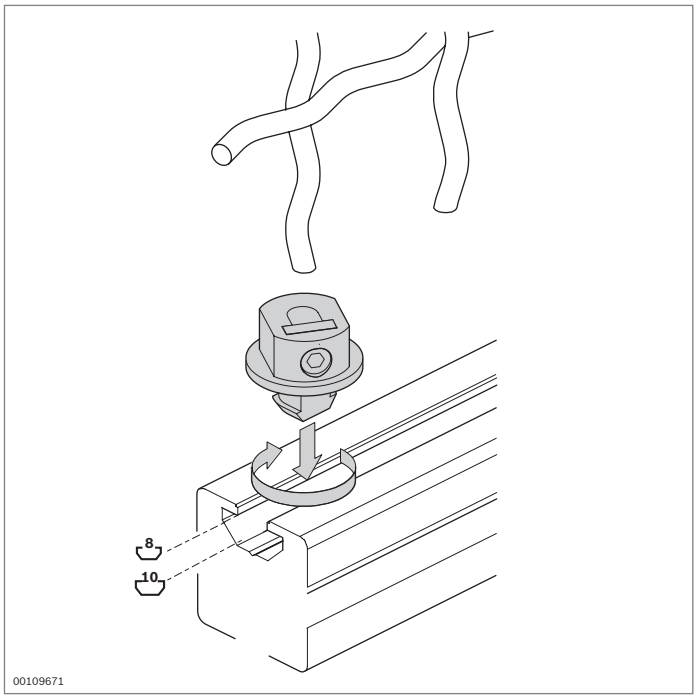

Clamp bushing



- For fastening woven wire grilles in the profile slot
- For woven wire grilles with a wire diameter up to 3.1 mm
- Suitable for 8 mm and 10 mm slots
- Low-cost connection element
- Rattle-free mounting

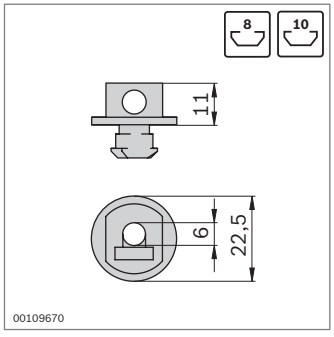

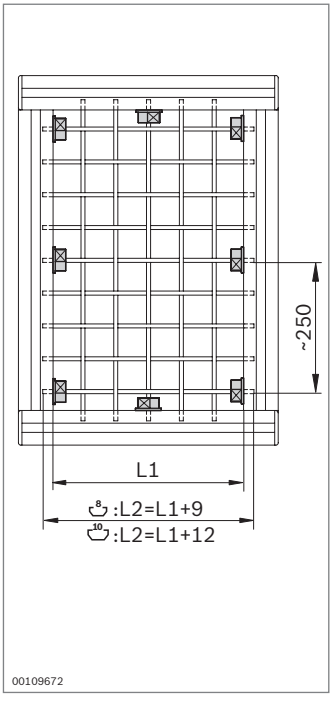

Clamp bushing	Slot		No.	FS
	8, 10	100	**3 842 515 244**	FS1

Material: Diecast zinc
Fastening material: Steel; galvanized

FS1

EN ISO 4027 M6x10
DIN 562 M6-04

Doors and fittings



Hinge profile (p. 8-3)

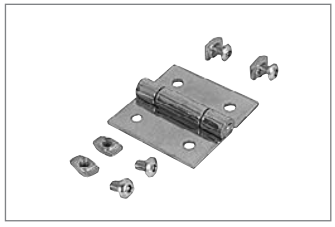

Hinge (p. 8-4)



Hinge, plastic (p. 8-5)



Hinge, aluminum (p. 8-6)



LIFTOFF hinge (p. 8-7)



Hinge, removable (p. 8-8)



Hinge, adjustable (p. 8-9)



Folding door element (p. 8-10)



Door lock for swing and sliding doors (p. 8-11, 8-15)



Door lock (p. 8-12)



Door lock for EcoSafe sliding doors (p. 8-13)



Door lock for swing doors (p. 8-14, 8-17)



Mortise lock for swing doors (p. 8-21)



Bow-type handle (p. 8-23)

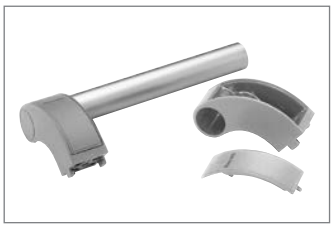

Safety handle (p. 8-24)



Sealing strip (p. 8-25)
Sealing profile (p. 8-26)



Slider (p. 8-27)

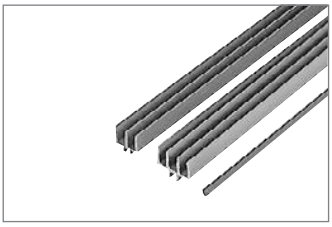

Sliding door profile PVC (p. 8-28)

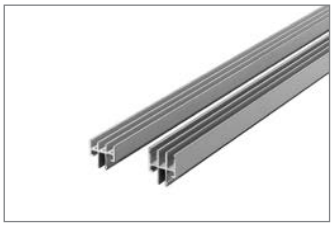

Sliding door profile Al Clip (p. 8-29)

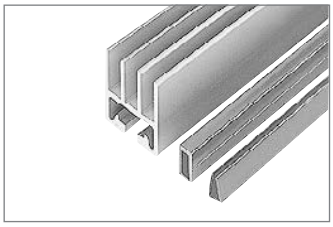

Sliding door profile Al 45 (p. 8-30)

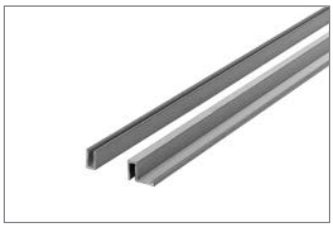

Edge protector, door handle profile (p. 8-32)

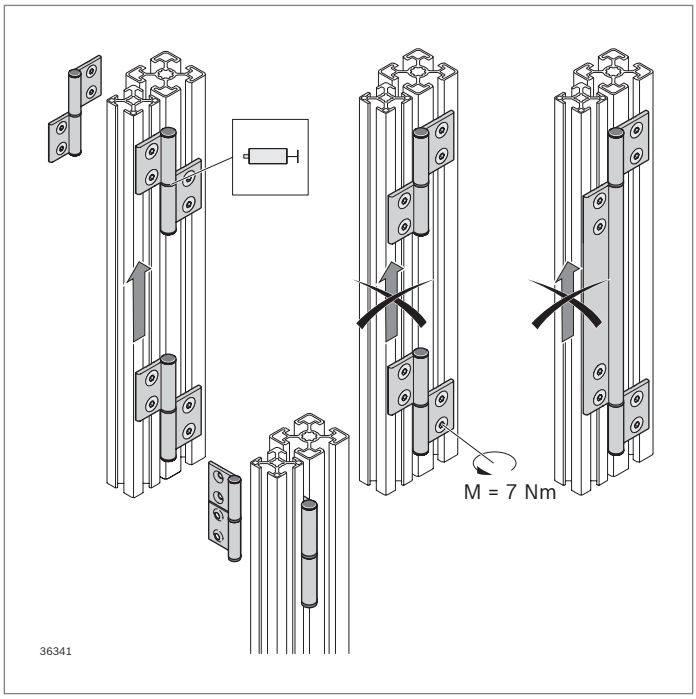

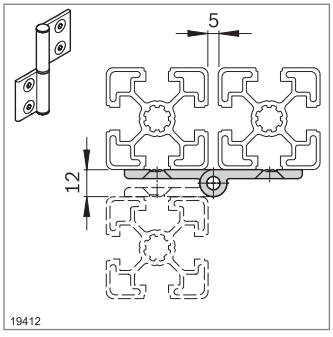

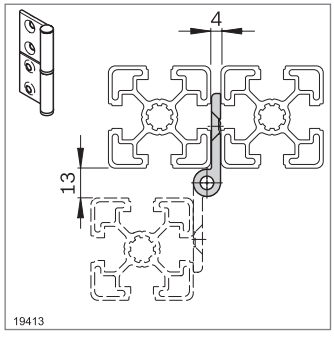

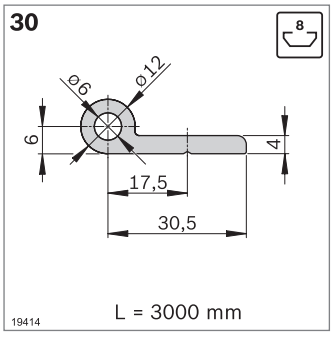

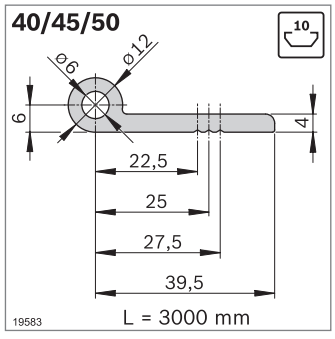

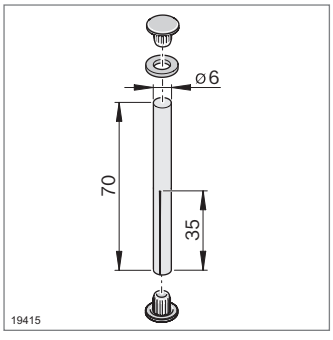

Hinge profile



- For self-assembly of hinges or hinge bands
- Possible to use as a non-transparent hinge band to fully cover the door gap
- Hinge profiles for slot dimensions 30 and 40/45/50 can also be combined for maximum flexibility
- For doors with profile frames or doors made of solid panel elements
- Assembly on exterior or interior
- Assembly as removable and non-removable hinges
- Opening to the right and left
- Centering slots as a drill guide for mounting bores
- Required finishing:
  - Cut the hinge halves to length
  - Drill holes for fixing

Required accessories:

- Hinge pins
- T-nut M6 (p. 3-4)
- Screw ISO 10642 M6x12 (8 mm slot)
- screw ISO 10642 M6x16 (10 mm slot)

Hinge profile	L (mm)		No.
30	3000[1)]	10	**3 842 543 371**
40/45/50	3000[1)]	10	**3 842 543 372**

[1)] Due to the (anodic oxidation) contact points produced in the manufacturing process, supplied in profile length of 3100 mm

Material: Aluminum; anodized

Slot	F_{max}
8	300 N
10	300 N

Hinge pins		No.
	10	**3 842 544 661**
Material:	Grooved pin: Steel; galvanized Washer, cover cap: TPE	
Scope of delivery:	Incl. grooved pin, 2 x cover cap, washer	

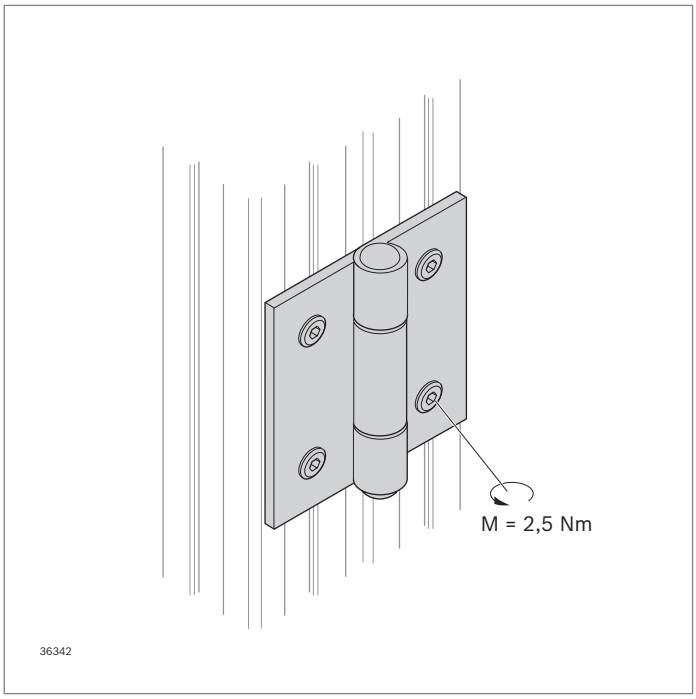

Hinge



- Assembly possible on solid panel elements
- For small doors and flaps
- Steel hinge for profiles with 6 mm slot

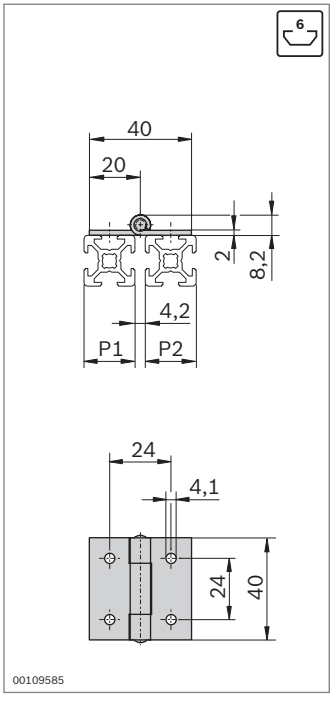

Slot	F_{max}
6	300 N

FS1

ISO 7380
M4x6
6

Hinge	P1 (mm)	P2 (mm)	ESD		No.	FS
	20	20		2	**3 842 535 684**	4xFS1

Material:	Steel; stainless Fastening material: Steel; galvanized
Scope of delivery:	Incl. fastening material (FS)

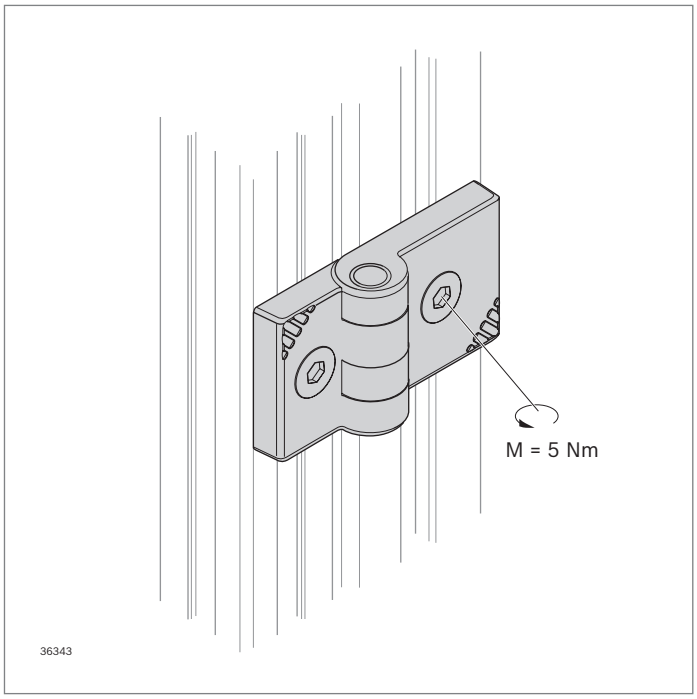

Hinge, plastic



- Plastic hinge for profiles with 8 mm or 10 mm slot
- Assembly possible on solid panel elements
- Centering bolts for easing mounting and as an anti-torsion element

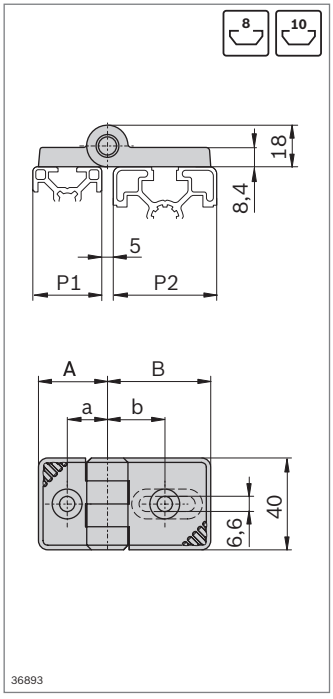

Slot	F_{max}
8	150 N
10	150 N

FS1



FS2

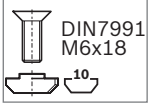

Hinge, plastic	P1 (mm)	P2 (mm)		No.	FS
	30	30	2	**3 842 554 458**	2xFS1
	30	40/50	2	**3 842 554 460**	1xFS1, 1xFS2
	30	45	2	**3 842 554 462**	1xFS1, 1xFS2
	30	60	2	**3 842 554 464**	1xFS1, 1xFS2
	40/50	40/50	2	**3 842 554 466**	2xFS2
	45	45	2	**3 842 554 468**	2xFS2
	45	60	2	**3 842 554 470**	2xFS2
	60	60	2	**3 842 554 472**	2xFS2

Material: PA; signal gray
Hinge axle: Steel; galvanized
Fastening material: Steel; galvanized

Scope of delivery: Incl. fastening material (FS)

P1/P2 (mm)	A/B (mm)	a/b (mm)
30	30	17.5
40	39	22.5
45	45	25.0
50	39	27.5
60	60	32.5

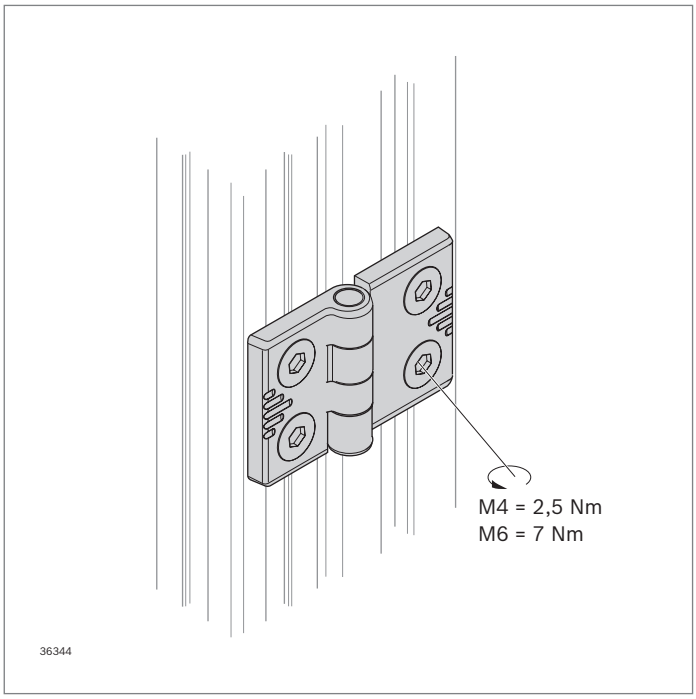

Hinge, aluminum

- Aluminum hinge for all slot systems
- Assembly possible on solid panel elements
- High-quality version
- Conductive version
- Suitable for use under cleanroom conditions thanks to wear-resistant guide bushings

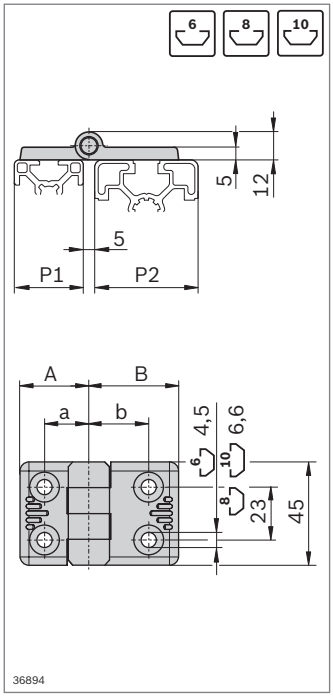

Slot	F_{max}
6	300 N
8	300 N
10	300 N

FS1
DIN7991 M4x8

FS2
DIN7991 M6x12

FS3
DIN7991 M6x16

Hinge, aluminum	P1 (mm)	P2 (mm)	ESD	No.	FS
	20	20	2	**3 842 544 525**	4xFS1
	20	30	2	**3 842 544 526**	2xFS1, 2xFS2
	30	30	2	**3 842 544 527**	4xFS2
	30	40	2	**3 842 544 528**	2xFS2, 2xFS3
	30	45	2	**3 842 544 529**	2xFS2, 2xFS3
	40	40	2	**3 842 544 530**	4xFS3
	45	45	2	**3 842 544 531**	4xFS3

Material: Diecast aluminum; nickel-plated
Fastening material: Steel; galvanized

Scope of delivery: Incl. fastening material (FS)

P1/P2 (mm)	A/B (mm)	a/b (mm)
20	20	12.5
30	28	17.5
40	37	22.5
45	40	25.0

Fraunhofer IPA TESTED DEVICE
Report No. BO 9903-159

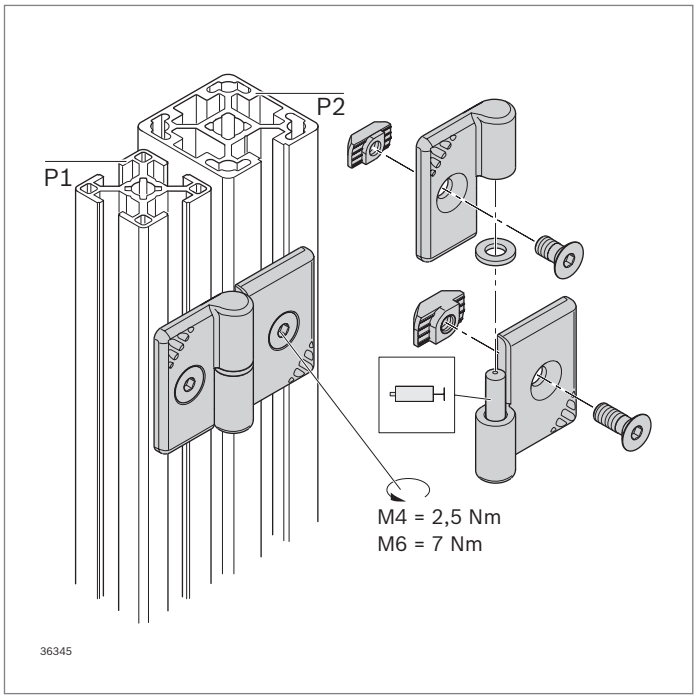

LIFTOFF hinge



designLINE

- Removable compact hinge, opening to the right or left
- designLINE version with special silver paint (RAL 9006) for an attractive, high-quality design
- Centering lugs as an assembly aid and anti-torsion element

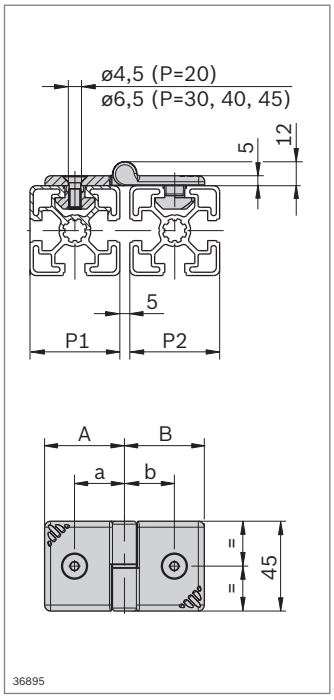

P1/P2 (mm)	A/B (mm)	a/b (mm)
20	20	12.5
30	28	17.5
40	37	22.5
45	40	25.0

Slot	F_{max}
6	300 N
8	300 N
10	300 N

FS1
DIN7991 M4x8
6

FS2
DIN7991 M6x12
8

FS3
DIN7991 M6x16
10

FS4
DIN 125 A6,4

LIFTOFF hinge	P1 (mm)	P2 (mm)		No.	FS
right	20	20	2	**3 842 543 334**	2xFS1, FS4
	20	30	2	**3 842 543 333**	FS1, FS2, FS4
	30	30	2	**3 842 543 332**	2xFS2, FS4
	30	40	2	**3 842 543 331**	FS2, FS3, FS4
	30	45	2	**3 842 543 330**	FS2, FS3, FS4
	40	40	2	**3 842 543 329**	2xFS3, FS4
	45	45	2	**3 842 543 328**	2xFS3, FS4
left	20	20	2	**3 842 543 327**	2xFS1, FS4
	20	30	2	**3 842 543 326**	FS1, FS2, FS4
	30	30	2	**3 842 543 325**	2xFS2, FS4
	30	40	2	**3 842 543 324**	FS2, FS3, FS4
	30	45	2	**3 842 543 323**	FS2, FS3, FS4
	40	40	2	**3 842 543 322**	2xFS3, FS4
	45	45	2	**3 842 543 321**	2xFS3, FS4

Material: Hinge: Diecast aluminum, painted
Fastening material: Steel; galvanized
Grooved pin: Steel; galvanized
Washer: PA

Scope of delivery: Incl. fastening material (FS)

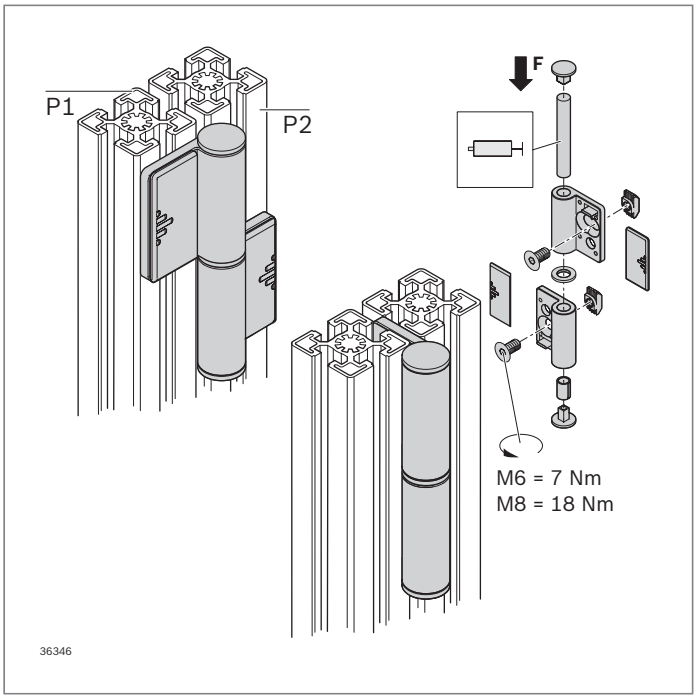

Hinge, removable



- For constructing large, heavy doors
- Removable
- For left and right stop
- Externally mounted: Opening angle approx. 180°
- Internally mounted: Prevents unauthorized removal, e.g. for safety devices

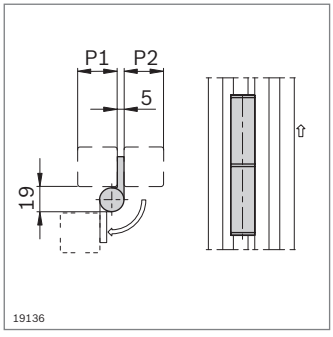

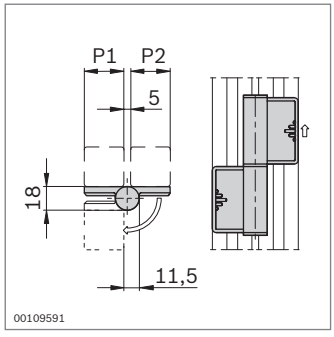

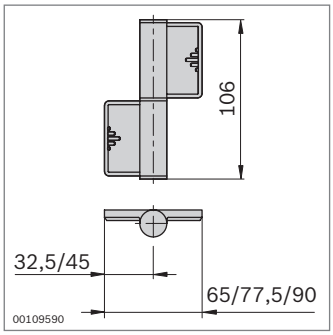

Slot	F_{max}
8	300 N
10	300 N

FS1



FS2

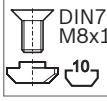

Hinge, removable	**P1** (mm)	**P2** (mm)		**No.**	**FS**
	30	30	2	**3 842 555 572**	2xFS1
	30	45	2	**3 842 555 574**	1xFS1,
	30[1)]	60			1xFS2
	45	45	2	**3 842 555 576**	2xFS2
	45[1)]	60			
	60[1)]	60			

[1)] Not suitable for installing on inner side

Material: Hinge: Diecast zinc
Cover cap: PP, signal gray
Fastening material: Steel; galvanized

Scope of delivery: Incl. fastening material (FS), 2 x cover cap

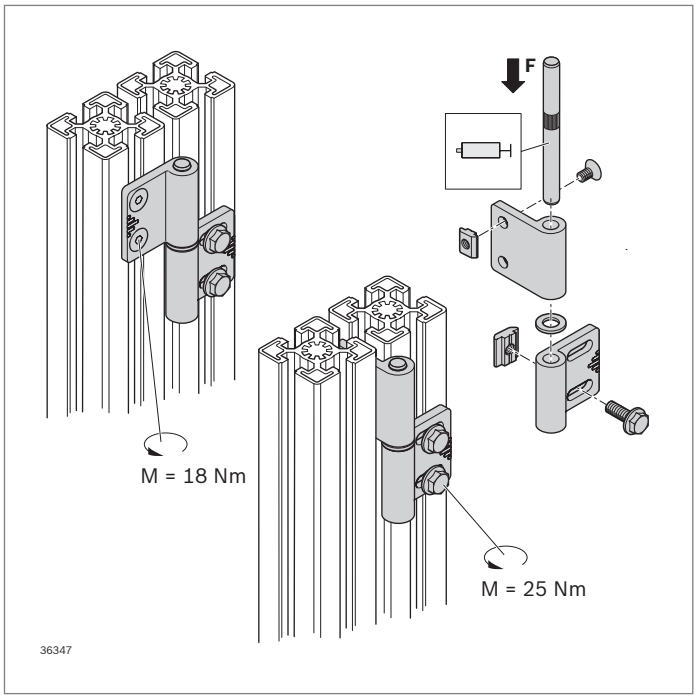

Hinge, adjustable



- For constructing large, heavy doors
- Adjustable for compensating clearance tolerances
- Removable
- For left and right stop
- Opening angle approx. 180°

Accessories:
T-nut slot 10, M8 (p. 3-4) for fixing a door with 10 mm slot

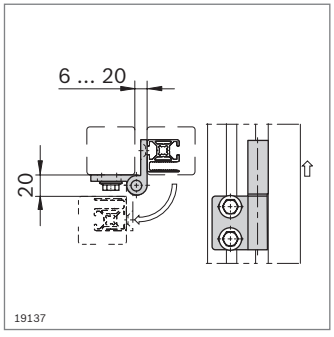

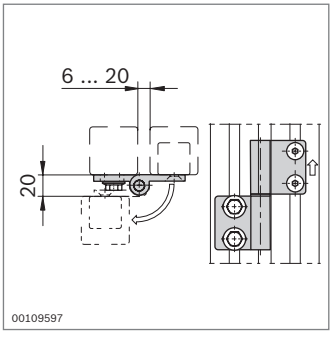

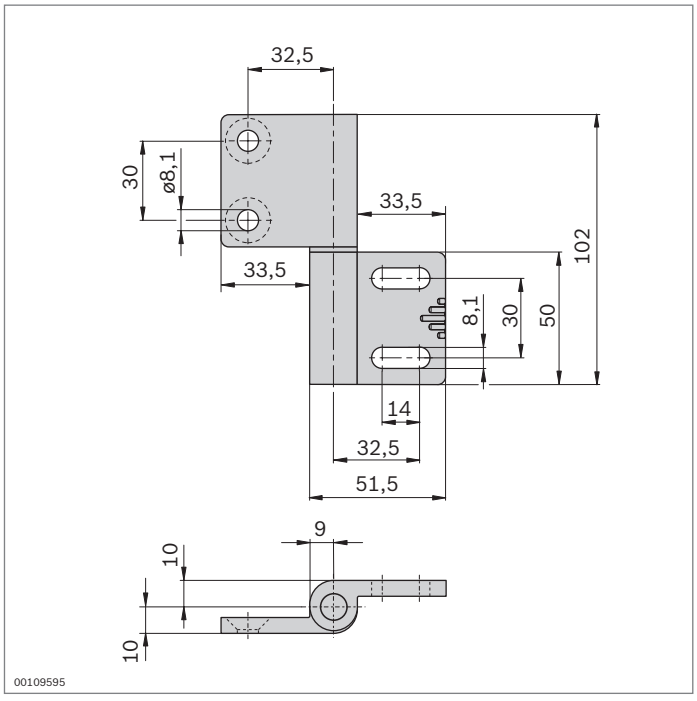

Hinge, adjustable		No.	FS
	2	**3 842 544 562**	2xFS1, 2xFS2

Material: Diecast aluminum
Fastening material: Steel; galvanized
Scope of delivery: Incl. fastening material (FS)

Slot	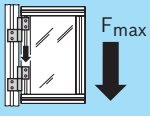 F_{max}
8	300 N
10	300 N

FS1

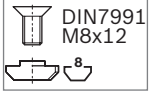

FS2

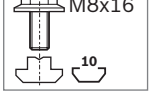

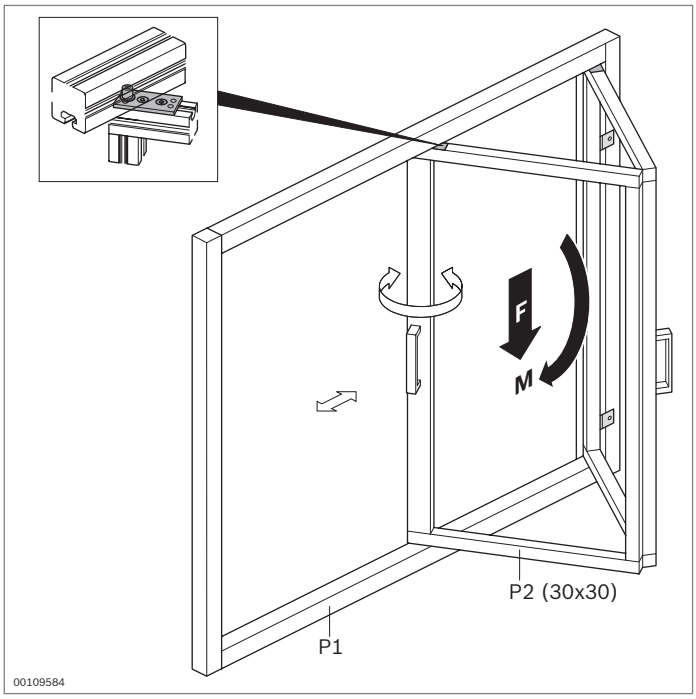

Folding door element



- For a simultaneous swinging and sliding action on folding doors made of 30 mm profiles
- Extremely long service life (approx. 50,000 actuations)
- Suitable for frames made of profiles with 8 mm and 10 mm slot
- The frame and door profile are always flush (the guide ring position depends on the thickness of the frame profile)

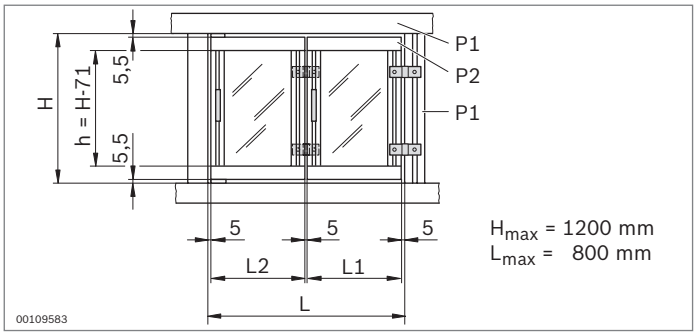

P2 (mm)	**P1** (mm)	**L1** (mm)	**L2** (mm)
30X30	45x45	0,5L - 29.5	0,5L + 14.5
	40x40	0,5L - 28.3	0,5L + 13.3
	30x30	0,5L - 25.8	0,5L + 10.8

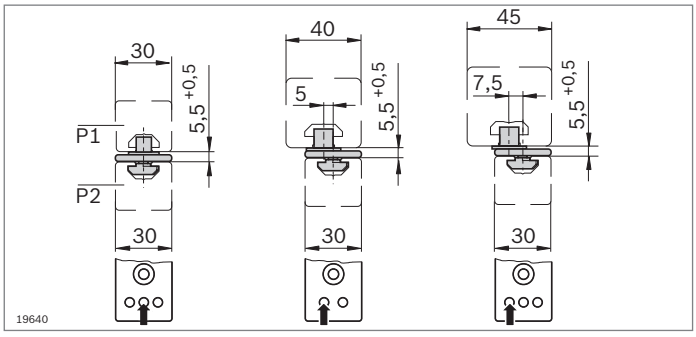

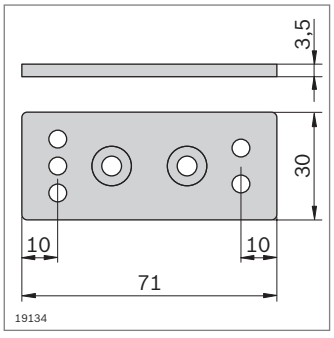

Slot	F_{max}	M_{max}
8	120 N	20 Nm
10	120 N	20 Nm

Folding door element	**No.**	**FS**
	3 842 516 715	2xFS1
Material:	Folding door element: Diecast zinc Guide ring: PA; black Fastening material: Steel; galvanized	
Scope of delivery:	Incl. fastening material (FS)	

FS1



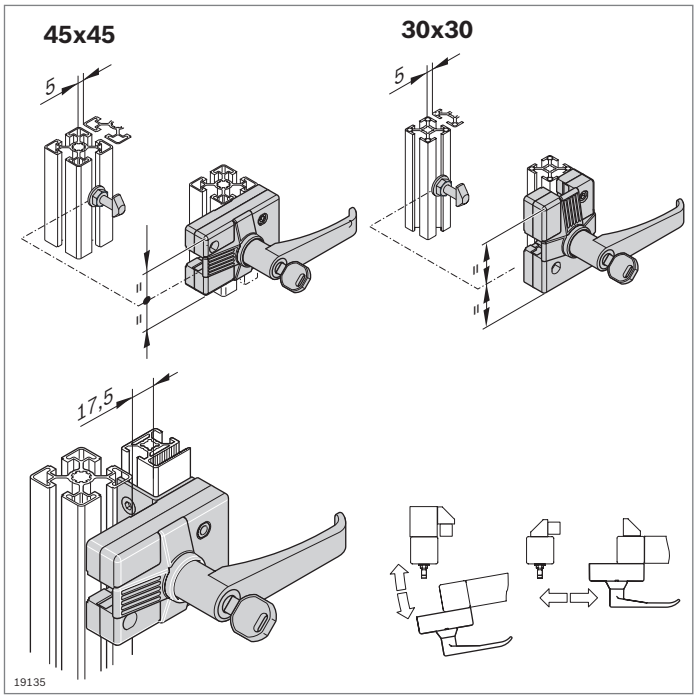

Door lock for swing and sliding doors

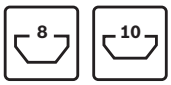

- Opening to the right and left
- Suitable for profiles 45x45 and 30x30
- “Standard locking” variant with random key selection (each lock has a different key)
- “Uniform locking” variant always has the same key
- Version with door handle or as two-way lock

Accessories:
Adapter plate

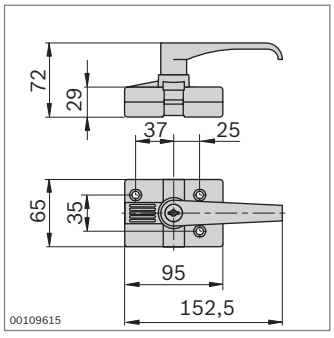



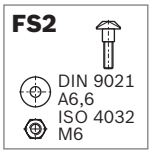

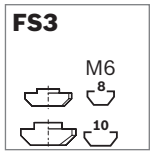

Door lock		No.	FS
Standard locking	30x30, 45x45	**3 842 525 821**	2xFS1, 1xFS2, 3xFS3
Uniform locking	30x30, 45x45	**3 842 525 822**	2xFS1, 1xFS2, 3xFS3

Material:	Housing: Diecast aluminum Door handle: PA; black Fastening material: Steel; galvanized
Scope of delivery:	Incl. 3 keys, fastening material (FS)

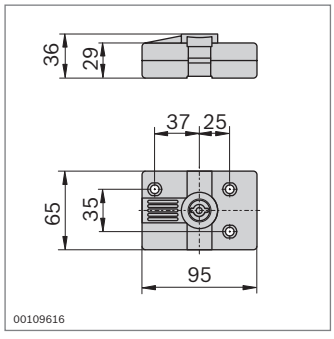



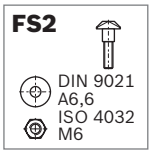

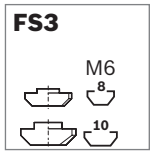

Door lock		No.	FS
	30x30, 45x45	**3 842 525 823**	2xFS1, FS2, 3xFS3

Material:	Diecast aluminum Fastening material: Steel; galvanized
Scope of delivery:	Incl. 1 x two-way key, fastening material (FS)

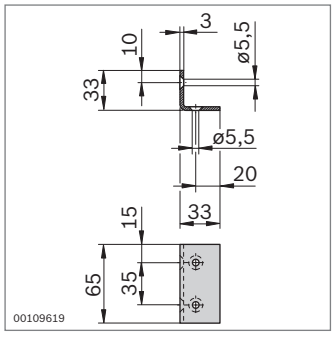

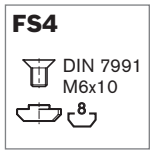

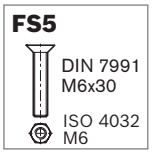

- Adapter plate for mounting the door lock on an EcoSafe protective frame (p. 10-6)

Adapter plate	No.	FS
	3 842 523 243	2xFS4, 2xFS5

Material:	Steel; galvanized Fastening material: Steel; galvanized
Scope of delivery:	Incl. fastening material (FS)

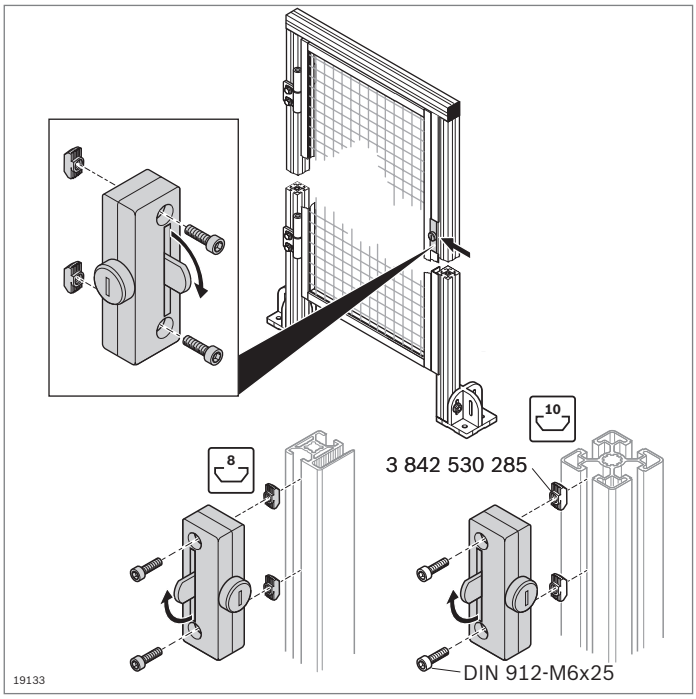

Door lock



- Opening to the right and left
- For frame profile 30x30 WG (EcoSafe protective fence system); incl. fastening material
- “Standard locking” variant with random key selection (each lock has a different key)
- “Uniform locking” variant always has the same key

Accessories for mounting on profile with 10 mm slot:

- 2 x T-nut M6, **3 842 530 285** (p. 3-4)
- 2 x screw DIN 912-M6x25

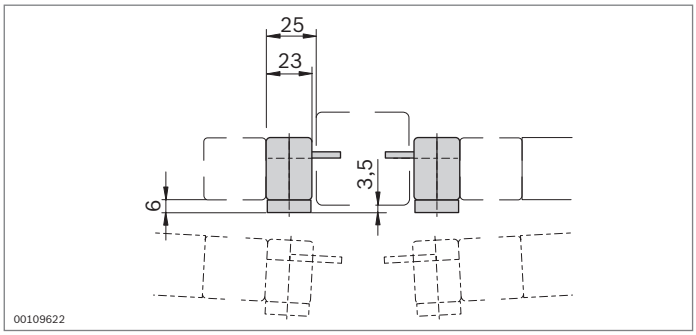

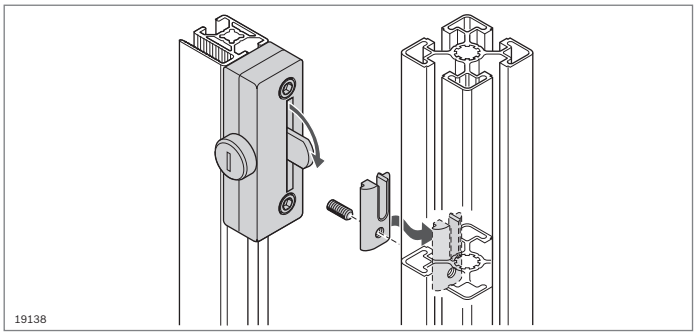

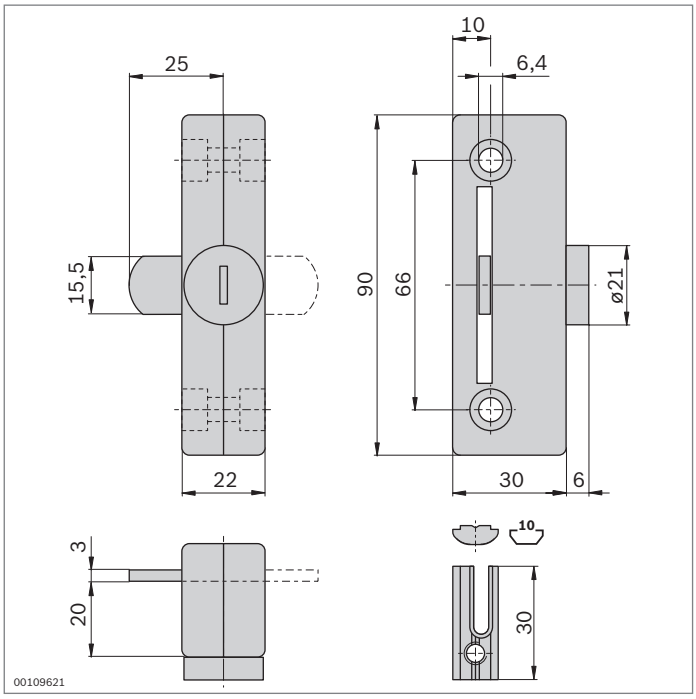

Door lock	No.	FS
Standard locking	**3 842 522 479**	2xFS1, 1xFS2
Uniform locking	**3 842 523 320**	2xFS1, 1xFS2

Material:	Diecast zinc Fastening material: Steel; galvanized
Scope of delivery:	Incl. 3 keys, fastening material (FS)

FS1
ISO 4762
M6x22
8

FS2
DIN 914
M6x10

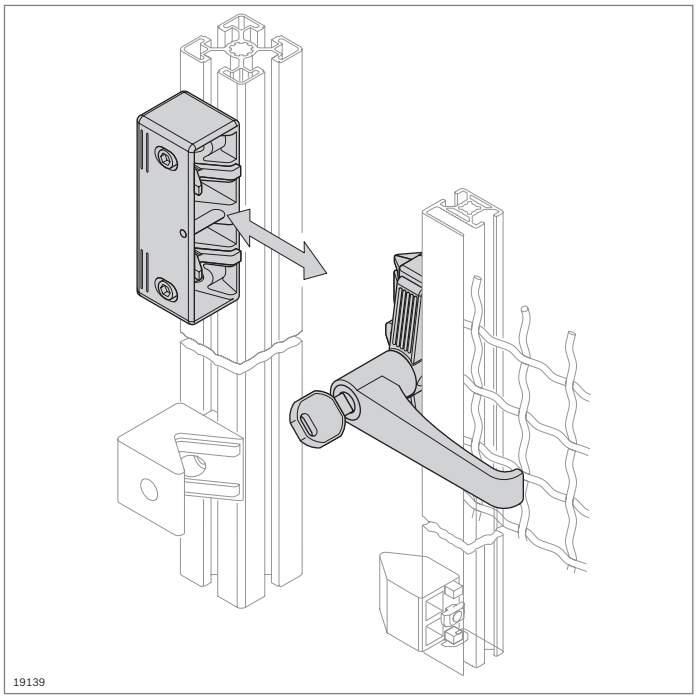

Door lock for EcoSafe sliding doors



- Opening to the right and left
- “Standard locking” variant with random key selection (each lock has a different key)
- “Uniform locking” variant always has the same key

Optional accessories:
Stop kit for cushioned closing of the doors (p. 12-5)

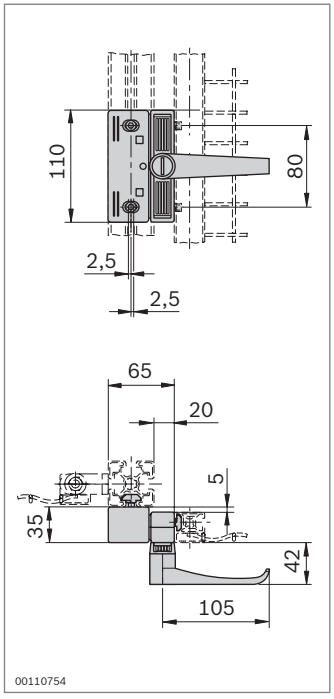

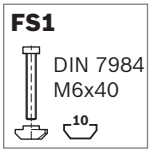

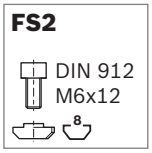

Door lock for sliding doors	No.	FS
Standard locking	**3 842 525 946**	2xFS1, 2xFS2
Uniform locking	**3 842 525 947**	2xFS1, 2xFS2

Material:	Housing: Diecast aluminum Door handle: PA; black Cover cap: PA6 Fastening material: Steel; galvanized
Scope of delivery:	Incl. 3 keys, fastening material (FS)

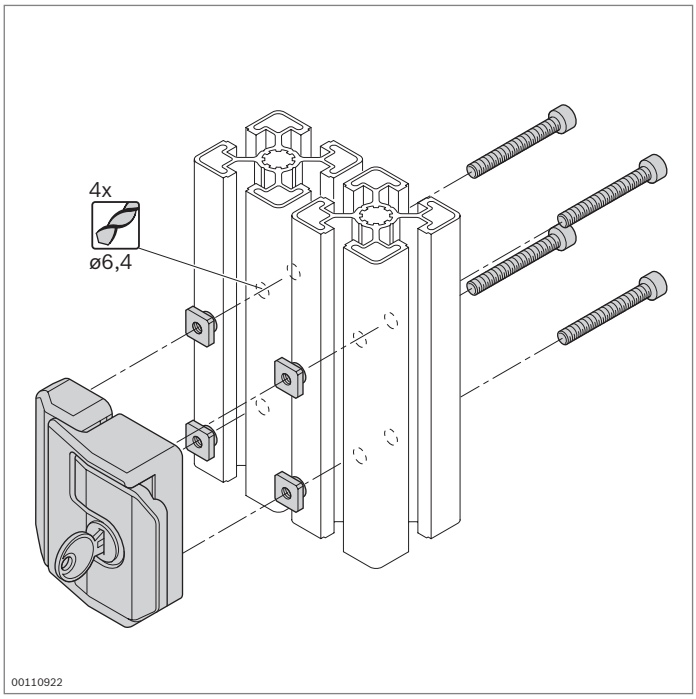

Door lock for swing doors

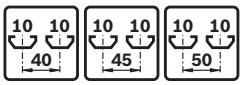

- Opening to the right and left
- Self-locking mechanism in the closed position
- Smooth closing
- Ergonomically designed folding handle for opening
- “Standard locking” variant with random key selection (each lock has a different key)
- “Uniform locking” variant always has the same key
- Profile finishing: Drill hole D6.4

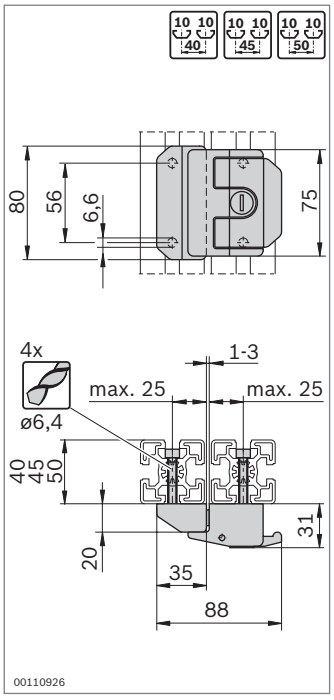









Door lock	No.	FS
Standard locking	**3 842 530 353**	4xFS1, 4xFS2, 4xFS3, 4xFS4
Uniform locking	**3 842 530 352**	4xFS1, 4xFS2, 4xFS3, 4xFS4

Material:	Diecast zinc; black powder-coated Fastening material: Steel; galvanized
Scope of delivery:	Incl. 2 keys, fastening material (FS)

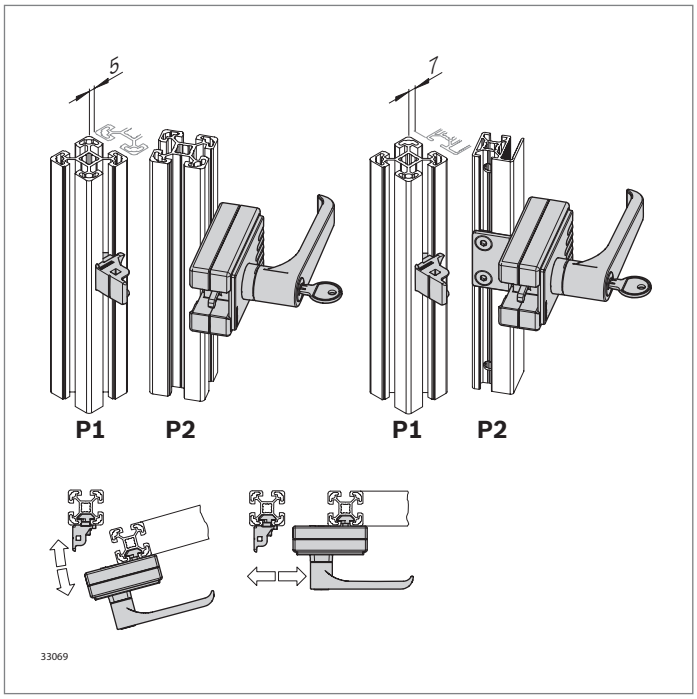

Door lock “Multi-use” for swing and sliding doors

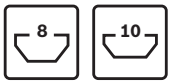

- Opening to the right and left
- For numerous profile combinations
- “Standard locking” variant with random key selection (each lock has a different key)
- “Uniform locking” variant always has the same key
- Version with door handle or as two-way lock
- Covered fastening screws
- Differing gap measurements for doors <400 mm with modular dimensions up to 45 mm and < 600 mm for modular dimensions of 50 mm (see assembly instructions **3 842 554 184**)
- Without profile finishing

Optional accessories:
Adapter plate for connecting to a WG40 or WG30 woven wire grille profile (p. 10-9)

P1	P2	P2	P2	P2	P2
30	WG30/40	30	–	–	–
40	WG30/40	30	40	–	–
45	WG30/40	30	40	45	–
50	WG30/40	30	40	45	50
60	WG30/40	30	40	–	–

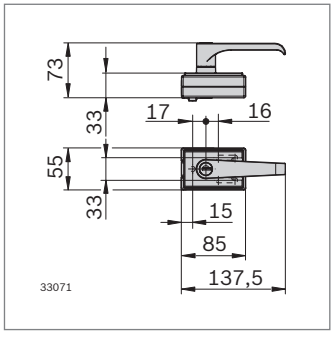





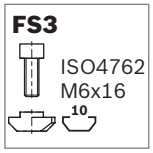

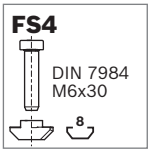

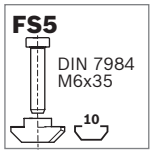

Door lock “Multi-use” for swing and sliding doors	No.	FS
Standard locking	**3 842 548 971**	3xFS1, FS2, FS3, 2xFS4, 2xFS5
Uniform locking	**3 842 548 970**	3xFS1, FS2, FS3, 2xFS4, 2xFS5

Material:	Housing: Diecast zinc Door handle: PA6, black Cover: PP; signal gray RAL 7004 Fastening material: Steel; galvanized
Scope of delivery:	Incl. 3 keys, fastening material (FS)

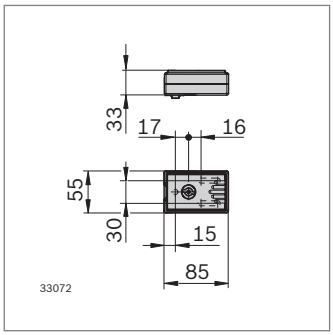





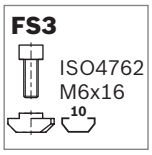

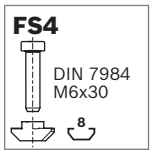

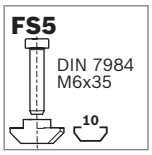

Door lock “Multi-use” for swing and sliding doors	No.	FS
Two-way lock	**3 842 548 965**	3xFS1, FS2, FS3, 2xFS4, 2xFS5

Material:	Housing: Diecast zinc Cover: PP; signal gray RAL 7004 fastening material: Steel; galvanized
Scope of delivery:	Incl. 1x two-way key, fastening material

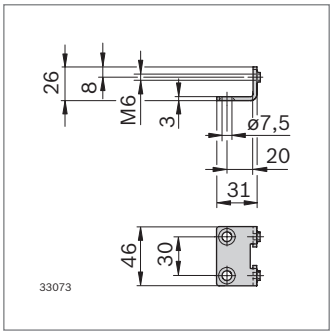

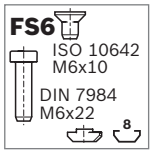

Adapter plate	No.	FS
EcoSafe	**3 842 548 969**	2xFS6

Material:	Steel; galvanized Fastening material: Steel; galvanized
Scope of delivery:	Incl. Fastening material

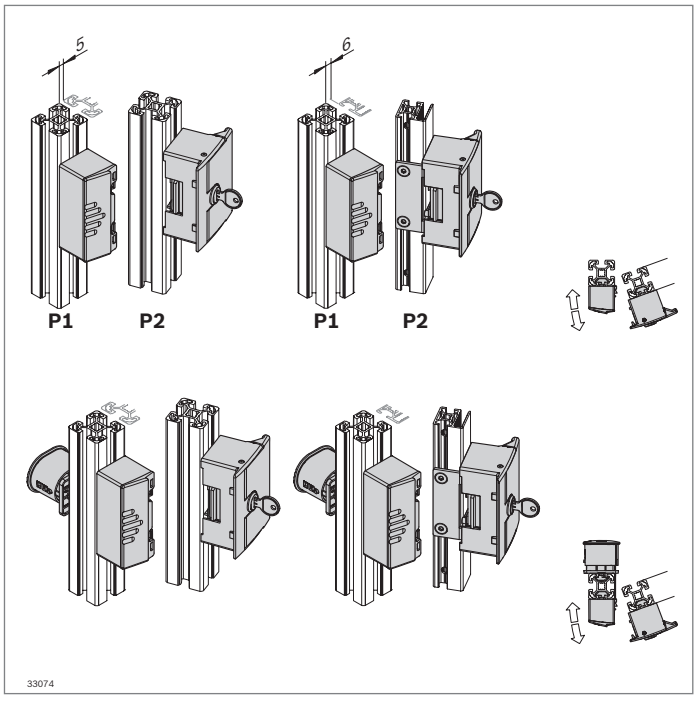

Door lock “Compact” for swing doors

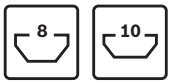

- Opening to the right and left
- For numerous profile combinations
- “Standard locking” variant with random key selection (each lock has a different key)
- “Uniform locking” variant always has the same key
- Covered fastening screws
- Installation of an emergency opening mechanism for unlocking from inside in emergency possible (Gap measurements according to assembly instructions **3 842 554 192**)
- Without profile finishing

Optional accessories:

- Adapter plate for connecting to a WG40 or WG30 woven wire grille profile (p. 10-9)
- Emergency opening mechanism (p. 8-18)

8

P1	P2	P2	P2	P2	P2
30	WG30/40	30	–	–	–
40	WG30/40	30	40	–	–
45	WG30/40	30	40	45	–
50	WG30/40	30	40	45	50
60	WG30/40	–	40	45	50

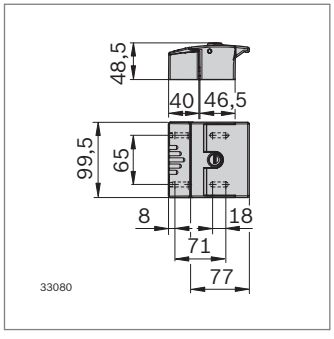



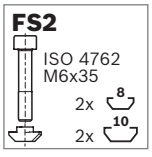

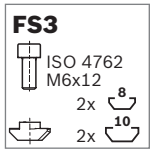

Door lock “Compact” for swing doors	No.	FS
Standard locking	**3 842 553 640**	4xFS1, 2xFS2, 2xFS3
Uniform locking	**3 842 553 639**	4xFS1, 2xFS2, 2xFS3

Material:	Housing: Diecast aluminum Cover: PP; signal gray RAL 7004 fastening material: Steel; galvanized
Scope of delivery:	Incl. 2 keys, fastening material

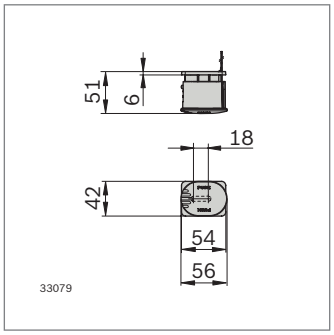

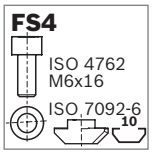

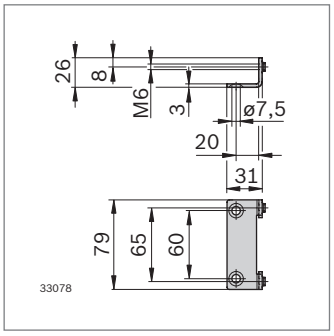

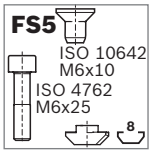

- For emergency opening of the door lock “Compact” from the inside in its locked state

Emergency unlocking		No.	FS
Compact		**3 842 554 134**	FS4
Material:	Steel; galvanized Pushbutton: PA6; red RAL 3020 Fastener: PA6; RAL 7004 Fastening material: Steel; galvanized		
Scope of delivery:	Incl. Fastening material		

Adapter plate		No.	FS
EcoSafe		**3 842 554 136**	2xFS5
Material:	Steel; galvanized Fastening material: Steel; galvanized		
Scope of delivery:	Incl. Fastening material		

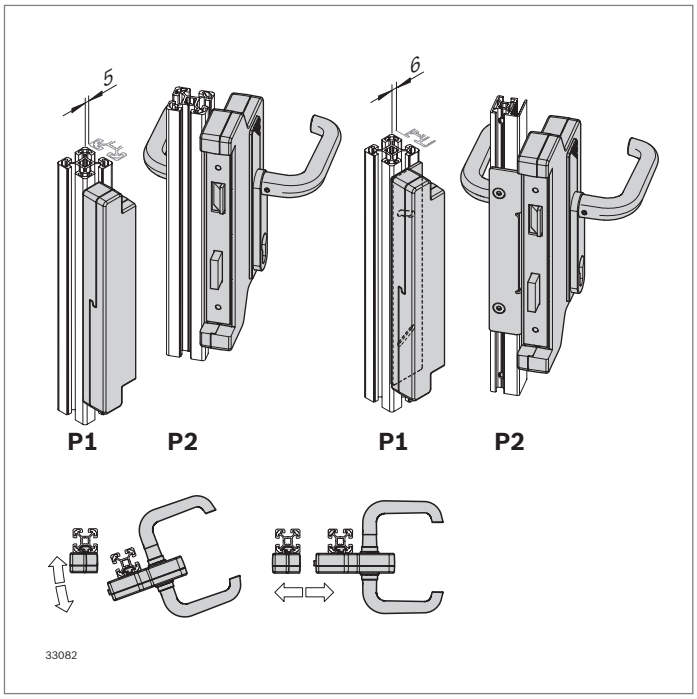

Chamber lock for swing and sliding doors

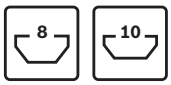

- Opening to the right and left
- For numerous profile combinations
- For installation of a standard lock cylinder (not included in the scope of delivery)
- Version with door handle, can be opened from inside and outside
- Without profile finishing
- Covered fastening screws

Optional accessories:

- Adapter plate for connecting to a WG40 or WG30 woven wire grille profile (p. 10-9)
- Lock cylinder (p. 8-20)

8

P1	P2	P2	P2	P2	P2
30	WG30/40	30	–	–	–
40	WG30/40	30	40	–	–
45	WG30/40	30	40	45	–
50	WG30/40	30	40	45	50
60	WG30/40	30	40	45	50

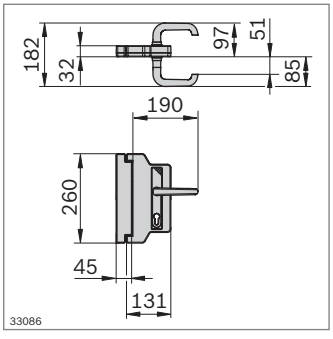

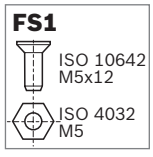



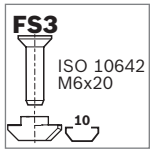

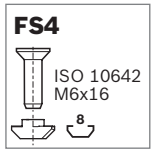

Chamber lock	No.	FS
Sliding door	**3 842 554 151**	4xFS1, 4xFS2, 4xFS3, 2xFS4
Swing door	**3 842 554 150**	4xFS1, 4xFS2, 4xFS3, 2xFS4

Material:	Housing: PA6 signal gray (RAL7004) Door handle: Aluminum; anodized Fastening material: Steel; galvanized Washer: Aluminum
Scope of delivery:	Incl. Fastening material

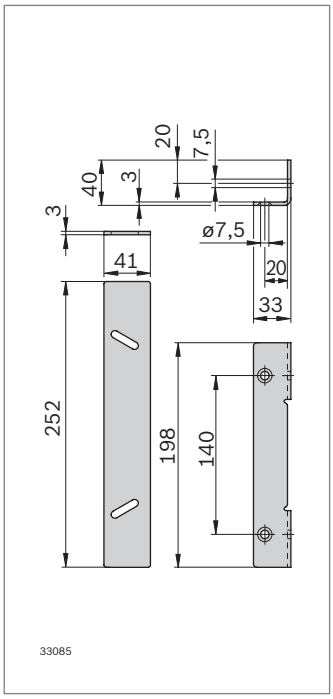

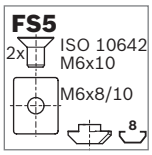

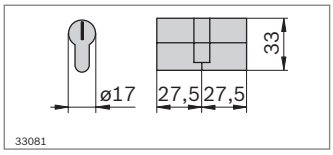

Adapter plate	No.	FS
Chamber lock	**3 842 554 152**	2xFS5

Material:	Steel; galvanized Fastening material: Steel; galvanized
Scope of delivery:	Incl. fastening material

- Conventional lock cylinder 27.5/27.5 is not included in the scope of delivery.

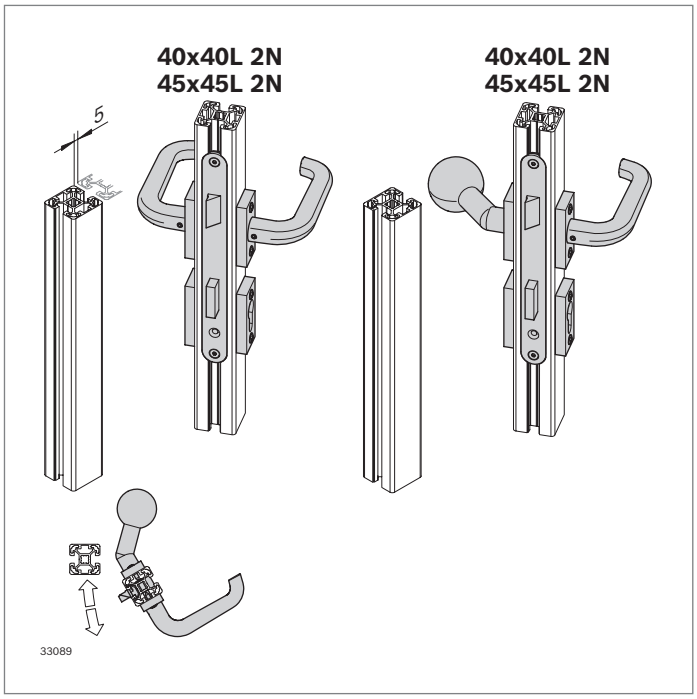

Mortise lock for swing doors



- For installation in 40x40L 2N or 45x45L 2N profiles
- For installation of a standard lock cylinder (not included in the scope of delivery)
- Robust design
- Door handle in the variants: Handle/handle, handle/knob
- Milled/drilled profile finishing
- Profile finishing can be ordered over Quick&Easy

Accessories:
- Handle/handle
- Handle/knob
- Lock cylinder (p. 8-22)

8

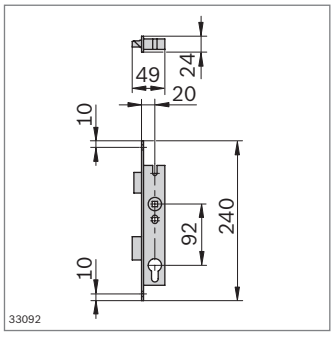

FS9
ISO 10642
M5x10



Mortise lock		No.	FS
		3 842 553 638	2xFS9
Material:	Steel Fastening material: Steel; galvanized		
Scope of delivery:	Incl. Fastening material		

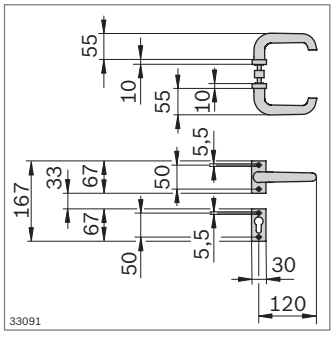

FS10
ISO 7051
4,8x22

Handle/handle		No.	FS
		3 842 553 631	8x FS10
Material:	Aluminum; anodized Fastening material: Steel; galvanized		
Scope of delivery:	Incl. Fastening material		

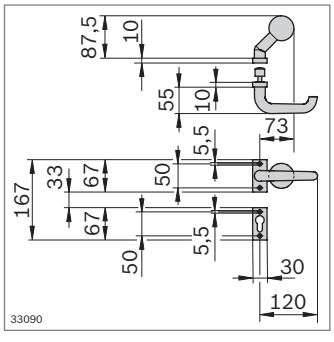

FS10
ISO 7051
4,8x22

Handle/knob		No.	FS
		3 842 553 630	8x FS10
Material:	Aluminum; anodized Fastening material: Steel; galvanized		
Scope of delivery:	Incl. Fastening material		

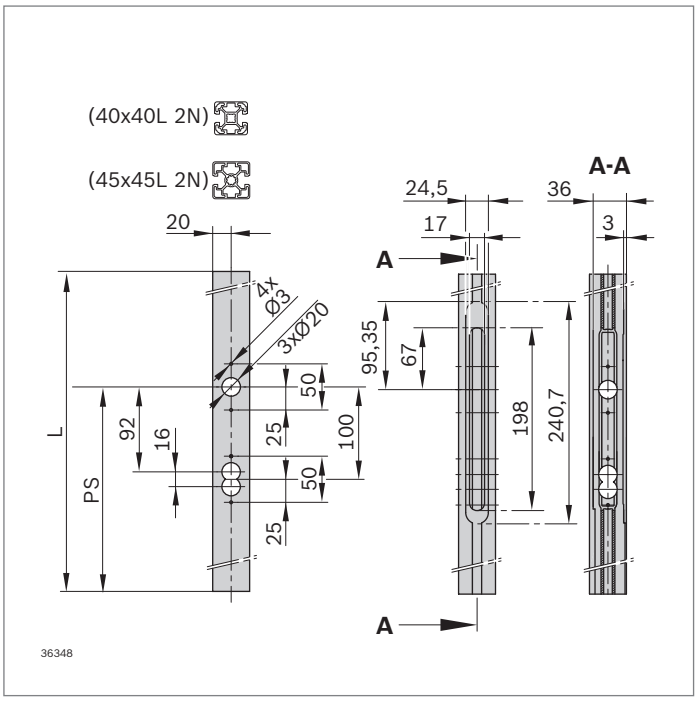

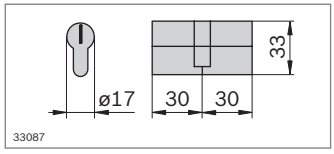

- Dimensional drawing of the profile finishing for mortise lock
- Finishing type “LM” (Lock Milling)
- Can be ordered over Quick&Easy

Strut profile	No.	Finishing type	Parameter
40x40L 2N	**3 842 993 720**	LM	PS, L
45x45L 2N	**3 842 993 739**	LM	PS, L

Parameter input – example: 3842993739 L=1800; [B=LM;PS=1100]

- Conventional lock cylinder 30/30 is not included in the scope of delivery

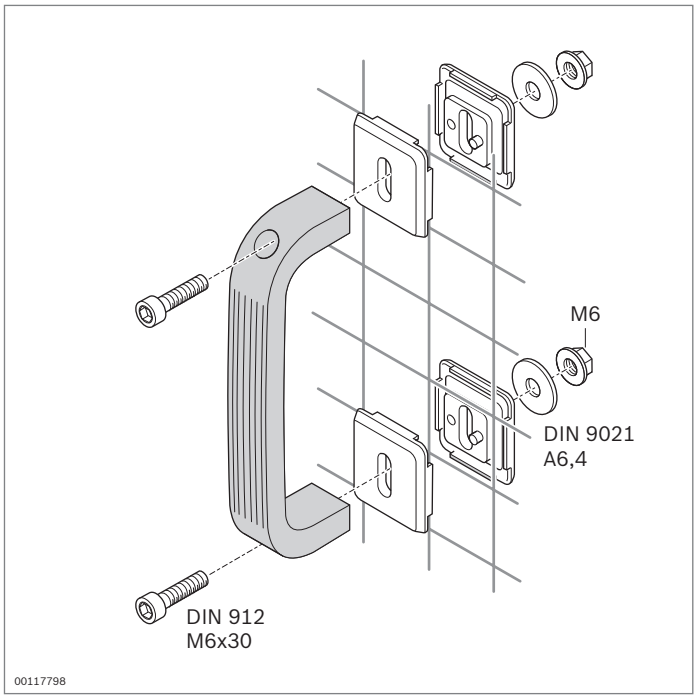

Bow-type handle



Bow-type handle

- Robust construction equipped to withstand strong forces
- Fastening in the profile slot or on a woven wire grille with the clamping element
- Suitable for use in ESD-protected environments

Optional accessories:

- Clamping element for mounting on woven wire grille (p. 10-19)
- T-nut (p. 3-4)

8

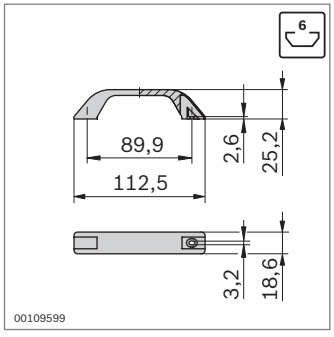

Bow-type handle	Color		No.
	Signal gray RAL 7004	10	**3 842 554 716**
	Black	10	**3 842 518 738**
Material:	PA		

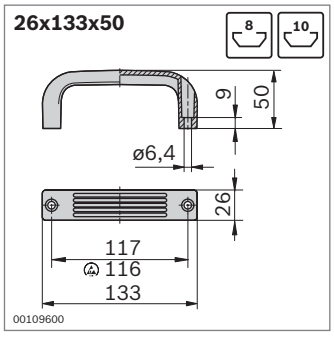

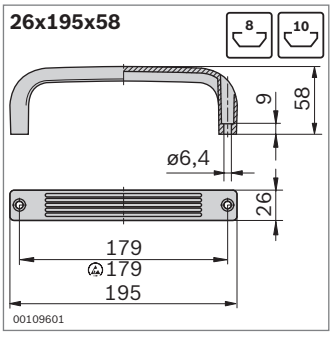

Bow-type handle	Color	ESD		No.
26x133x50	Signal gray RAL 7004		10	**3 842 554 718**
	Black	ESD	10	**3 842 525 481**
26x195x58	Signal gray RAL 7004		10	**3 842 554 720**
	Black	ESD	10	**3 842 525 767**
Material:	PA			

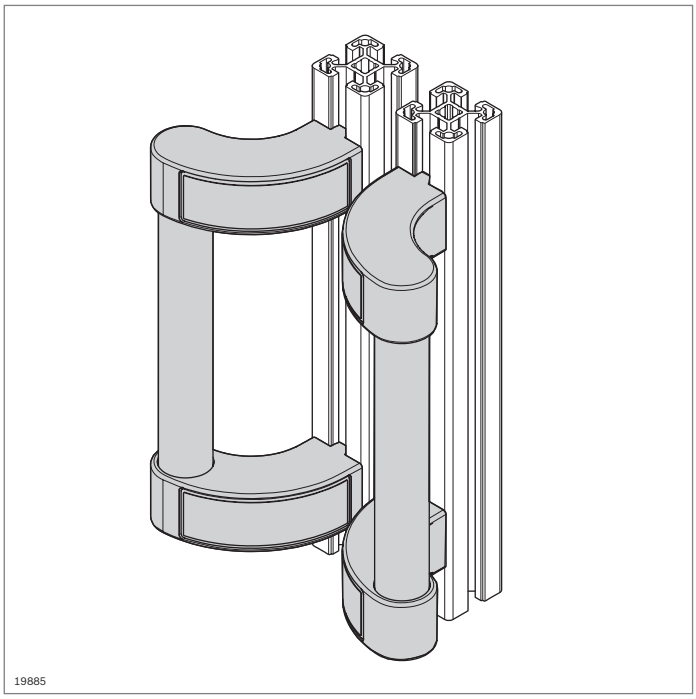

Safety handle



- Prevents injuries caused by catching of body parts when closing sliding doors
- Suitable for sliding or swing doors
- The length of the handle can be varied by changing the tube D28

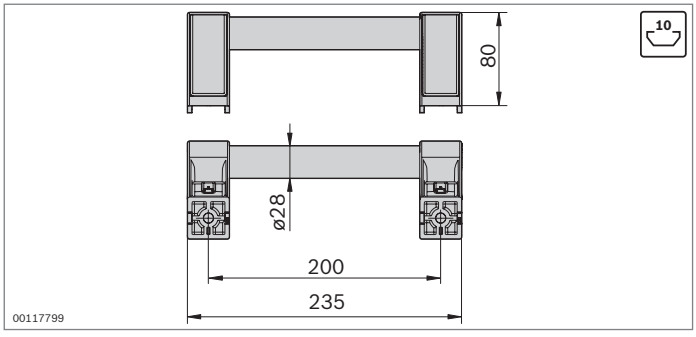

Safety handle		No.	FS
		3 842 555 564	2xFS1
Material:	Round tube D28: Aluminum; anodized Holder: PA; signal gray RAL 7004		
Scope of delivery:	Incl. fastening material (FS)		

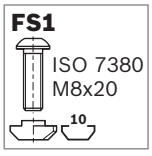

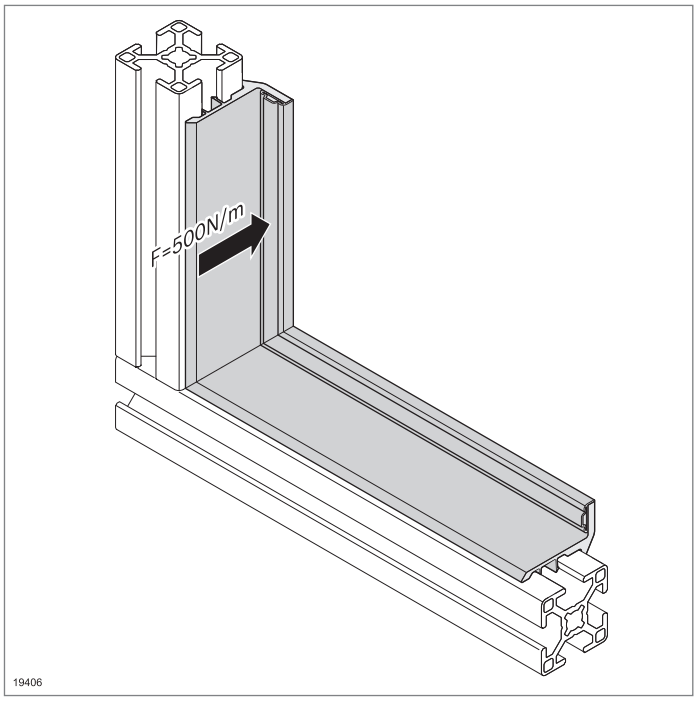

Sealing strip



- For sealing doors (width > 500 mm) with an elastic lip seal
- Can be clipped into the slot
- Non-transparent elastic lip seal covers the door gap
- Stop for swing doors (impact force: 500 N/m)
- For flush-closing doors

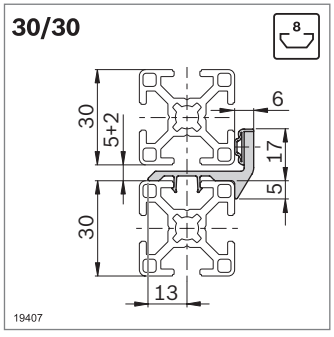

Sealing strip	L (mm)		No.
30/30	3000	10	**3 842 555 554**
Material:	PVC/TPE; signal gray RAL 7004		

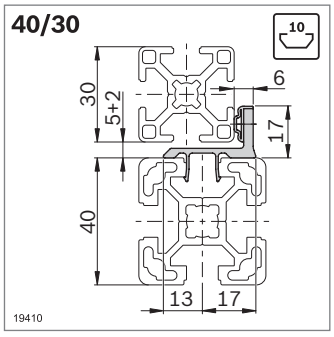

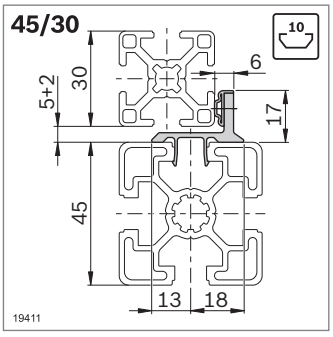

Sealing strip	L (mm)		No.
40/30	3000	10	**3 842 555 562**
45/30	3000	10	**3 842 555 560**
Material:	PVC/TPE; signal gray RAL 7004		

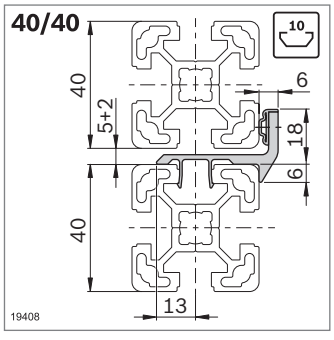

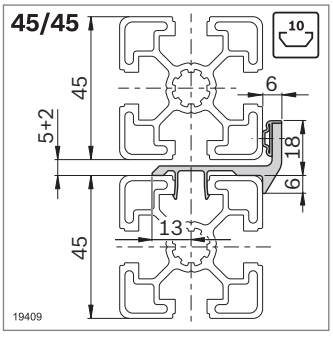

Sealing strip	L (mm)		No.
40/40	3000	10	**3 842 555 558**
45/45	3000	10	**3 842 555 556**
Material:	PVC/TPE; signal gray RAL 7004		

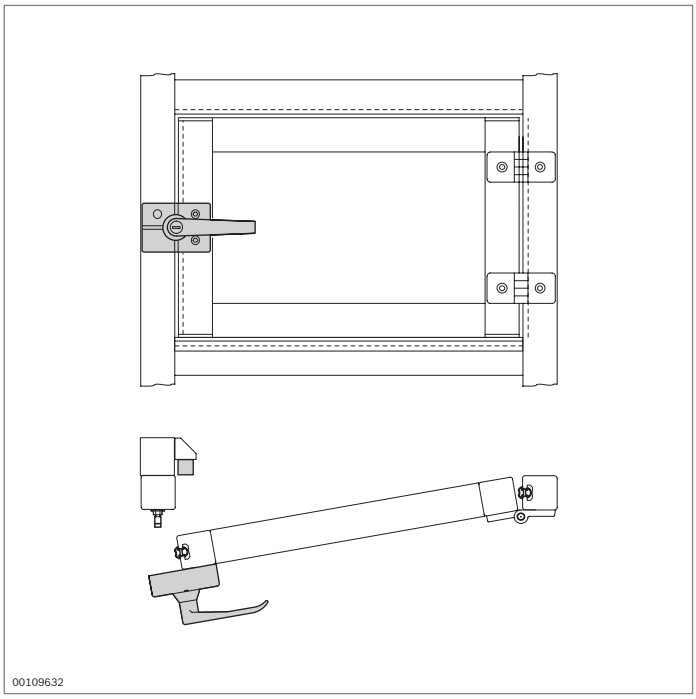

Sealing profile



- For sliding and swing doors
- Prevents particles from entering or escaping

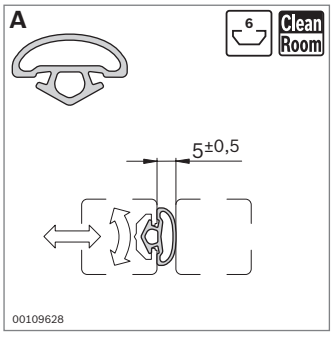

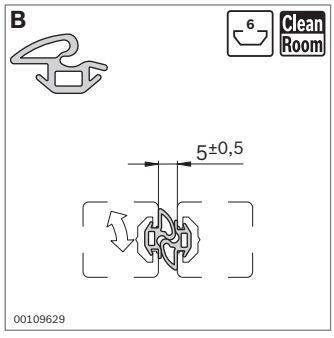

- Suitable for use in cleanroom environments
- Two-piece seal (**B**) also performs a stop function.

Sealing profile	Slot	L (mm)	No.
A	6	10000	**3 842 524 623**
B	6	10000	**3 842 524 622**
Material:	TPE; light gray RAL 7035, hardness: 64° ±5 shore A		

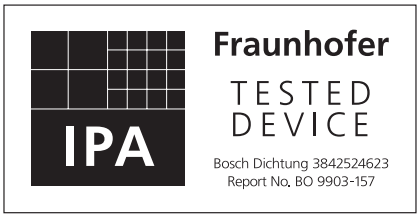

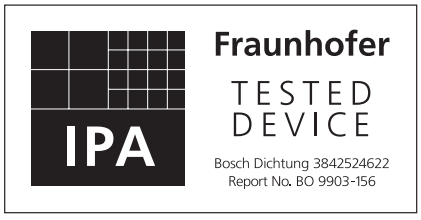

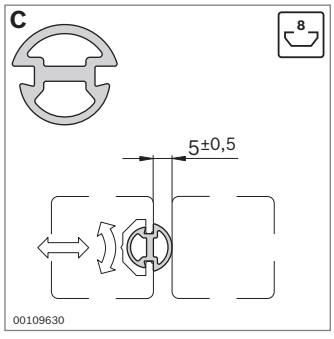

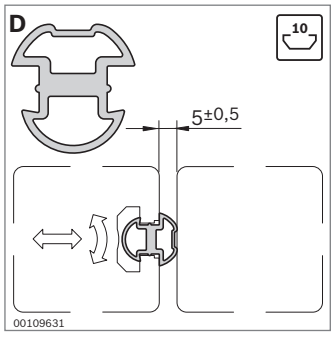

Sealing profile	Slot	L (mm)	No.
C	8	10000	**3 842 516 598**
D	10	10000	**3 842 518 492**
Material:	NBR; black, hardness 60° shore A		

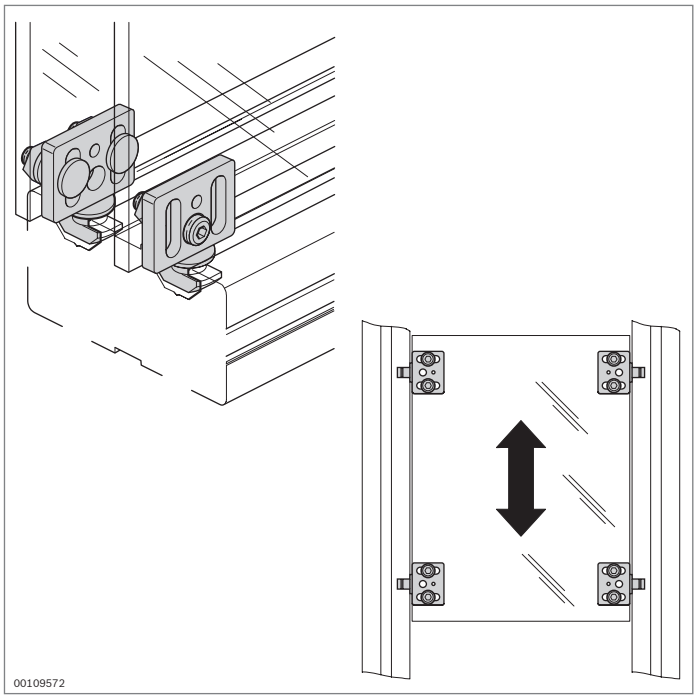

Slider



- For constructing inexpensive sliding and lifting doors
- Good functional reliability

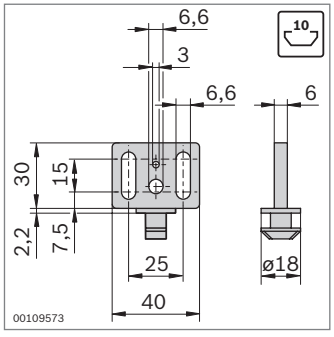

Slider			No.
		10	**3 842 555 226**
Material:	POM; signal gray RAL 7004		

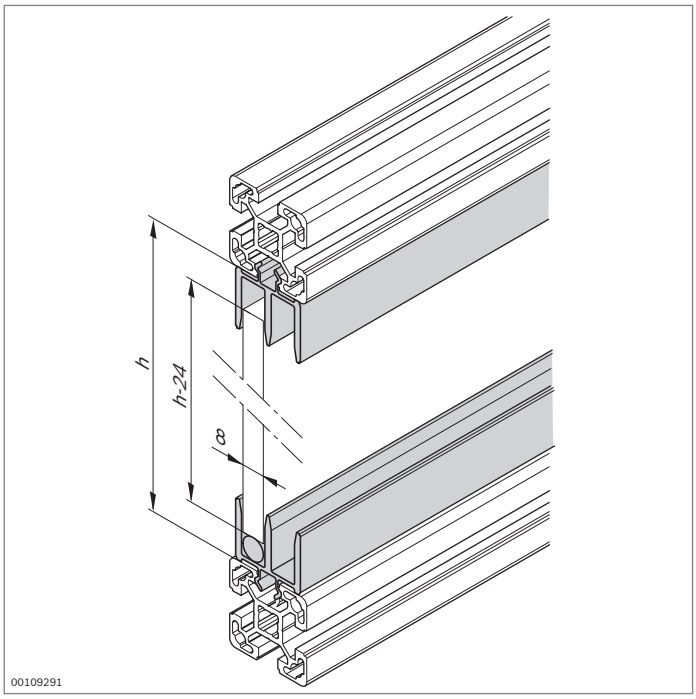

Sliding door profile, PVC



- Can be clipped into the supporting frame made of strut profiles
- Round bar to minimize the displacement force required
- For panel elements of a thickness of 8 mm
- Insertion of the panel element into closed frame

Optional accessories:

- Edge protector (p. 8-32)
- Door handle profile (p. 8-32)
- Bow-type handle (p. 8-23)

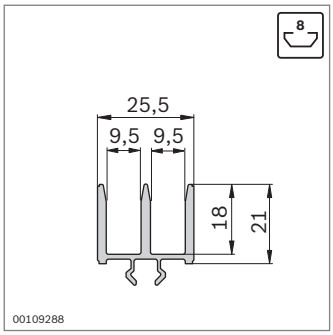

Sliding door profile, PVC	Slot	L (mm)		No.
	8	2000	10	**3 842 555 262**
Material:	PVC; signal gray RAL 7004			

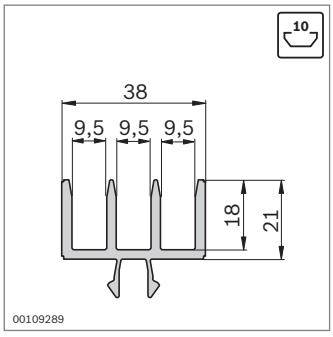

Sliding door profile, PVC	Slot	L (mm)		No.
	10	2000	10	**3 842 555 260**
Material:	PVC; signal gray RAL 7004			

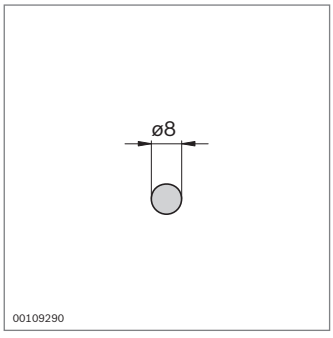

Round bar	L (mm)		No.
	2000	10	**3 842 516 694**
Material:	POM; black		

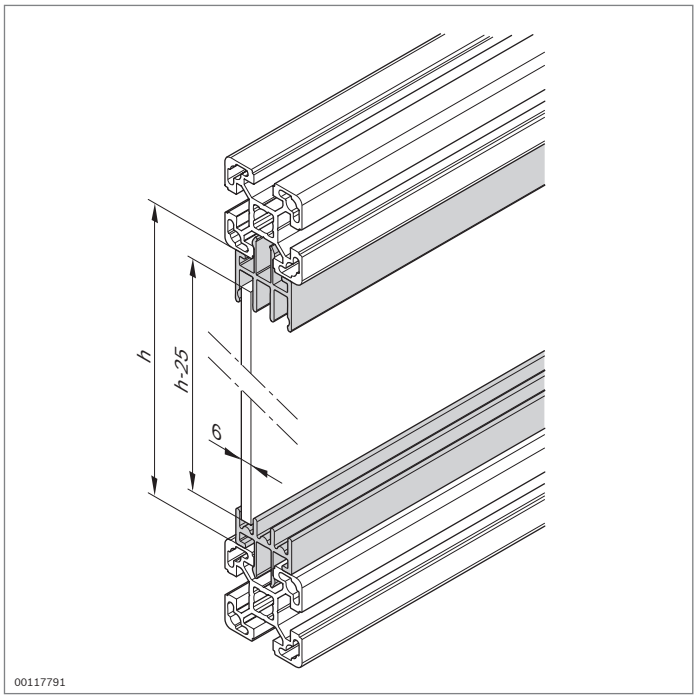

Sliding door profile Al Clip

10

- Can be clipped into the supporting frame made of strut profiles
- Sliding door profile, bottom, with half-round floor contour to minimize the displacement force required
- For panel elements with a thickness of 5 or 6 mm
- Insertion of the panel element into closed frame

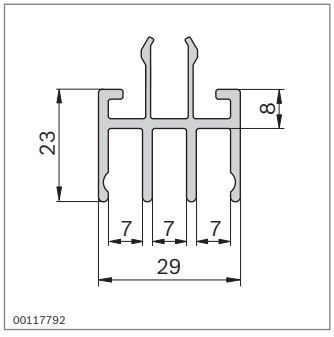

Sliding door profile, top		L (mm)	No.
1 pc		40 ... 3000	**3 842 993 425 / L**
10 pcs		3000	**3 842 536 531**

Material: Aluminum; anodized

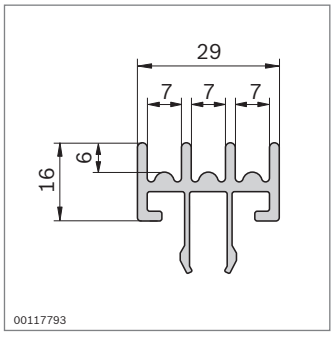

Sliding door profile, bottom		L (mm)	No.
1 pc		40 ... 3000	**3 842 993 426 / L**
10 pcs		3000	**3 842 536 532**

Material: Aluminum; anodizeda

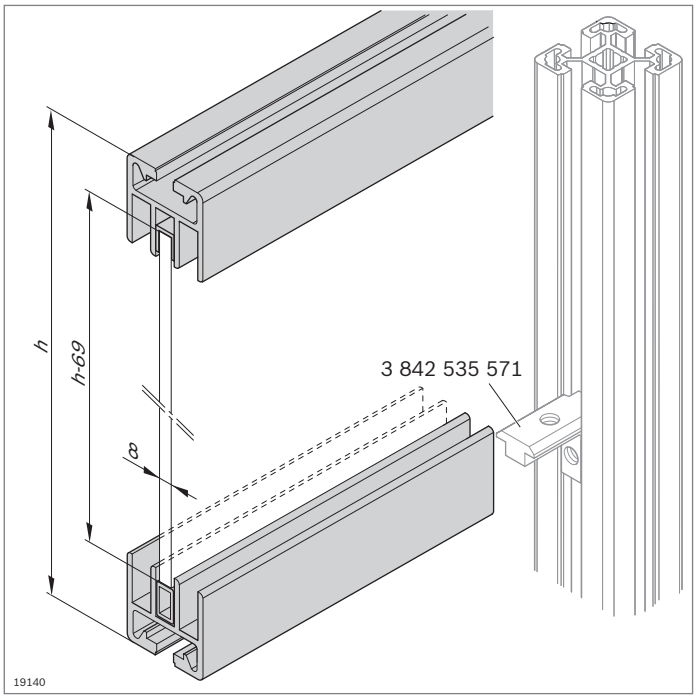

Sliding door profile Al 45
Cover cap, end piece

10

Sliding door profile Al 45

- Aluminum profile as a supporting construction element
- Installation using inner brackets between two vertical struts
- Glide profile to edge the upper part of the sliding door
- Insertion profile acts as a slide surface
- For panel elements of a thickness of 8 mm
- Insertion of the panel element into closed frame

Accessories:

- Cover cap (p. 8-31)
- End piece (p. 8-31)
- Inner bracket (p. 3-14), inner bracket R (p. 3-15)

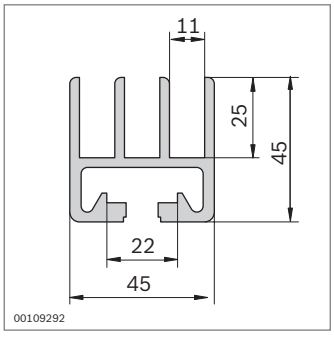

Sliding door profile		L (mm)	No.
1 pc		100 ... 6070	**3 842 990 115 / L**
1 pc F1	F1	100 ... 6000	**3 842 990 116 / L**
20 pcs		6070	**3 842 557 943**

Material: Aluminum; anodized

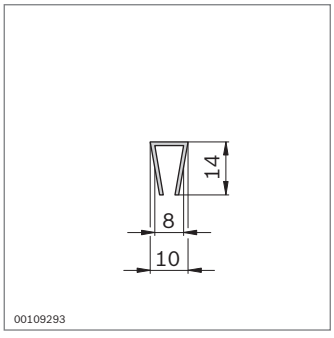

Glide profile	L (mm)		No.
	3000	10	**3 842 554 724**

Material: Hard PVC; signal gray RAL 7004

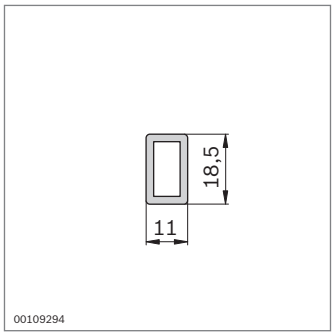

Insertion profile	L (mm)		No.
	3000	10	**3 842 554 726**
Material:	PA; signal gray RAL 7004		

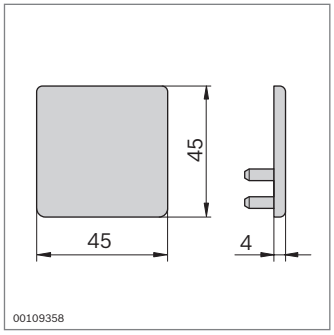

Cover cap

- As a design element and to prevent injuries

Cover cap	Color	ESD		No.
	Signal gray		20	**3 842 551 662**
Material:	PP; signal gray RAL 7004			

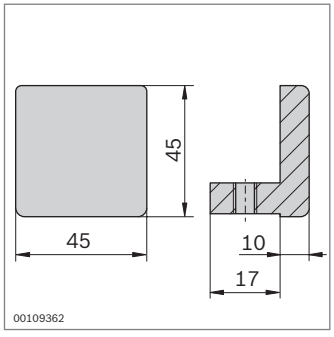

FS1



DIN 916
M8x16

End piece

- For use as a stop for sliding elements
- Clamping with setscrew in the profile slot

End piece	ESD		No.	FS
		20	**3 842 191 194**	FS1
Material:	Diecast aluminum			
Scope of delivery:	Incl. fastening material (FS)			

8

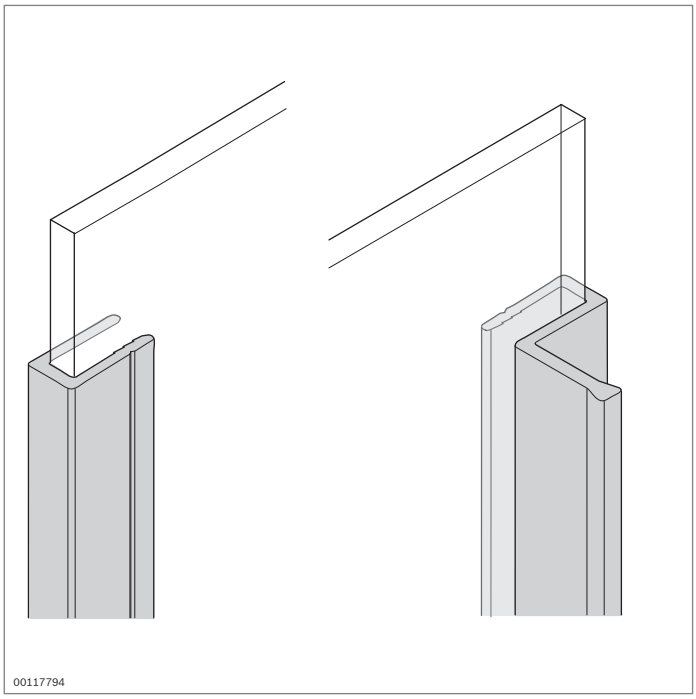

Edge protector
Door handle profile

- For reinforcing frameless panel elements on sliding doors
- Profile for s = 6 mm can also be used for 1/4 inch plates

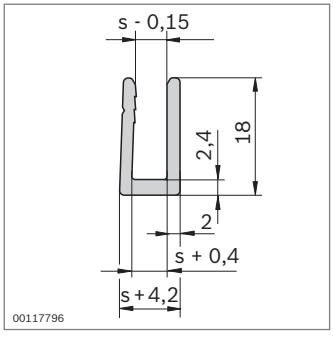

Edge protector		**s** (mm)	**L** (mm)	**No.**
1 pc		5	40 ... 3000	**3 842 993 429 / L**
10 pcs		5	3000	**3 842 536 537**
1 pc		6	40 ... 3000	**3 842 993 430 / L**
10 pcs		6	3000	**3 842 536 540**

Material: Aluminum; anodized

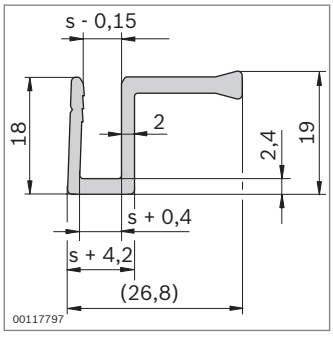

Door handle profile		**s** (mm)	**L** (mm)	**No.**
1 pc		5	40 ... 3000	**3 842 993 427 / L**
10 pcs		5	3000	**3 842 536 533**
1 pc		6	40 ... 3000	**3 842 993 428 / L**
10 pcs		6	3000	**3 842 536 536**

Material: Aluminum; anodized

Accessories for protective devices

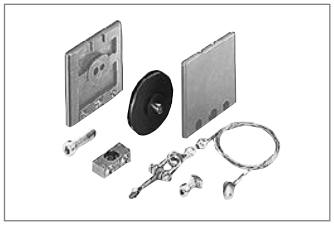

Counterbalance (p. 9-2)

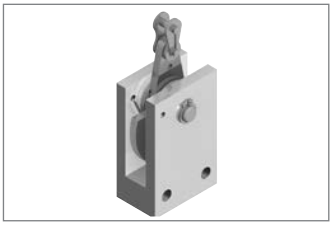

Safety catch (p. 9-4)



Bumper (p. 9-5)

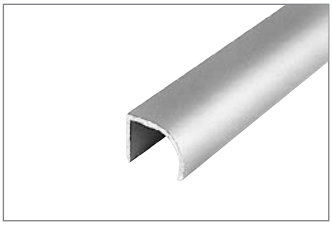

Handle bar (p. 9-5)

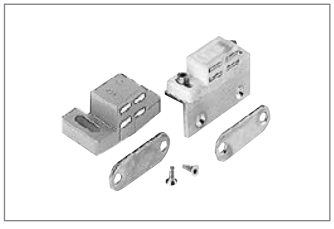

Magnet catch (p. 9-6)



Double ball stop latch (p. 9-7)



Ball catch (p. 9-8)

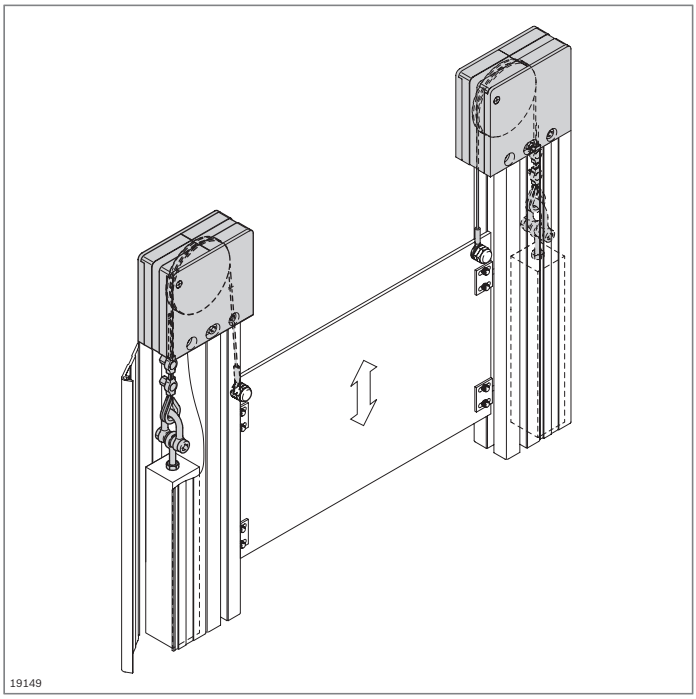

Counterbalance

10

- For lifting doors comprising a deflection pulley and control cable
- Counterweight individually adjustable and preferably guided in a cable duct
- Length of cable can be adjusted
- Service life: 50000 actuations
- Profile finishing:
  – M12 for fastening the deflection pulley
- Fit lifting doors with a back-up fall arrestor in accordance with the Machinery Directive 2006/42/EC

Required accessories:
Counterbalance weight (square profile 35x35 mm)

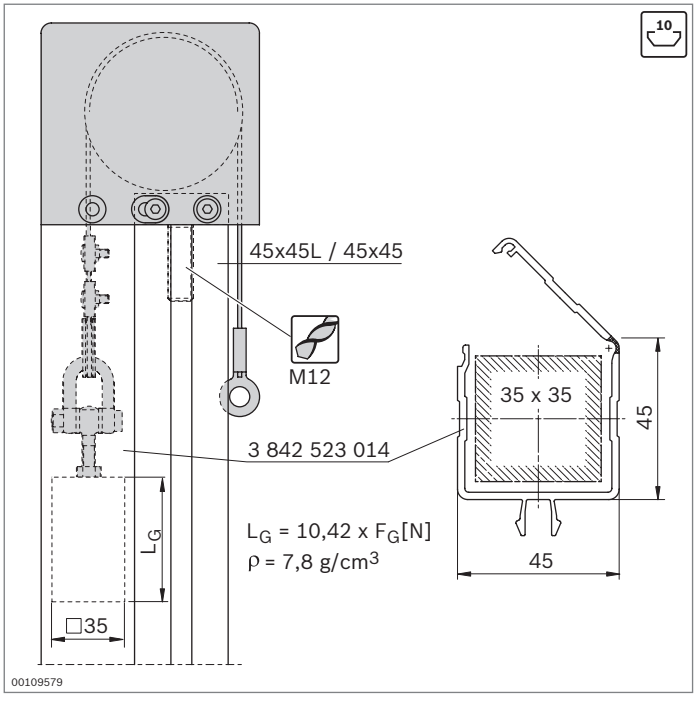

Optional accessories:

- Cable duct 45x45 (p. 11-2)
- Slider (p. 12-3/8-27)
- Safety catch (p. 9-4)

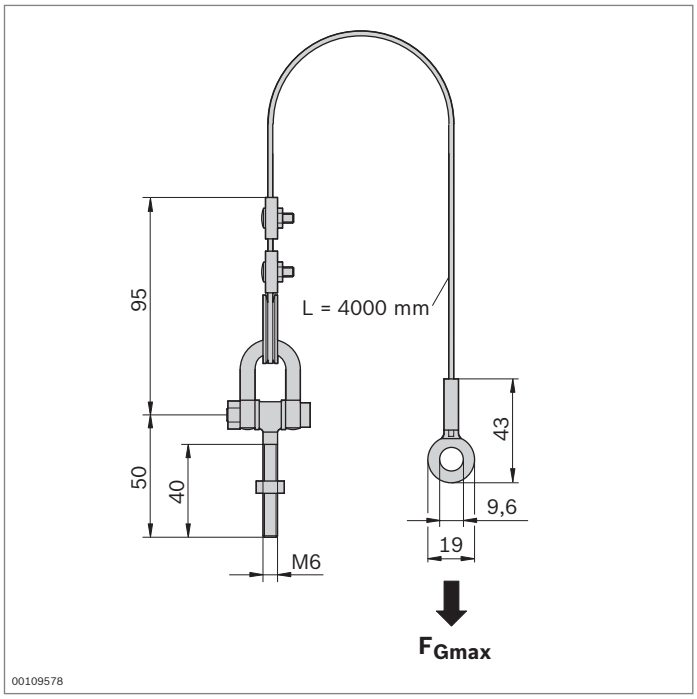

Counterbalance control cable	No.
	3 842 518 798
Material:	Steel; stainless

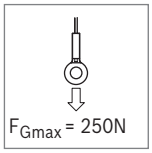

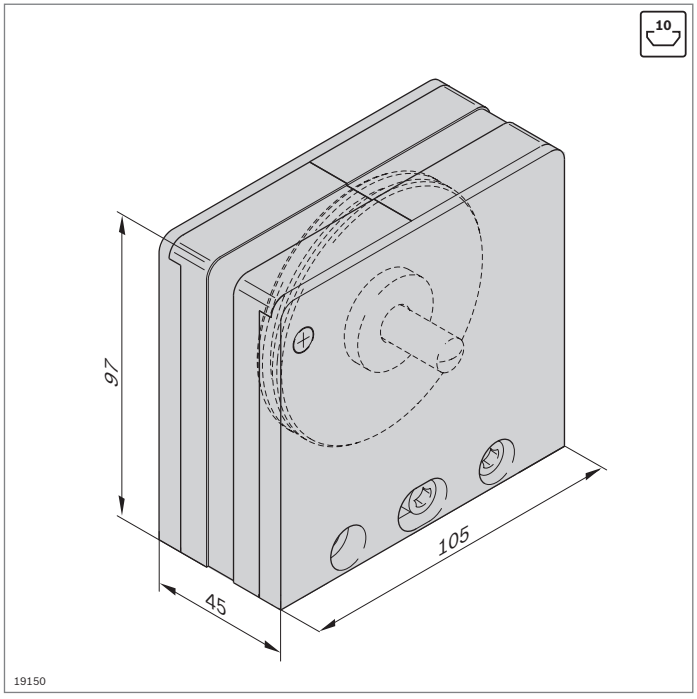

Counterbalance deflection pulley	No.	FS
	3 842 518 797	FS1, FS2
Material:	Housing: PA; black Fastening material: Steel; galvanized	
Scope of delivery:	Incl. fastening material (FS)	

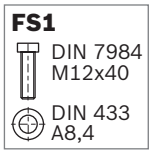



9

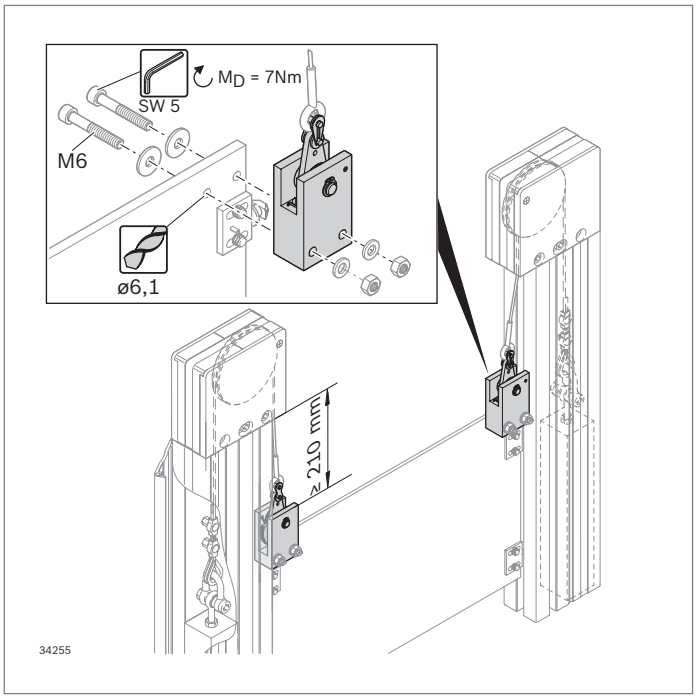

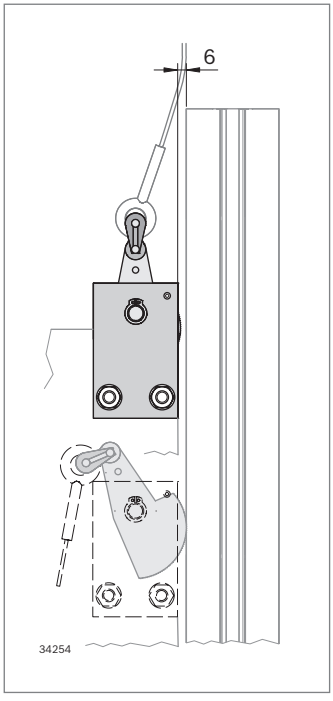

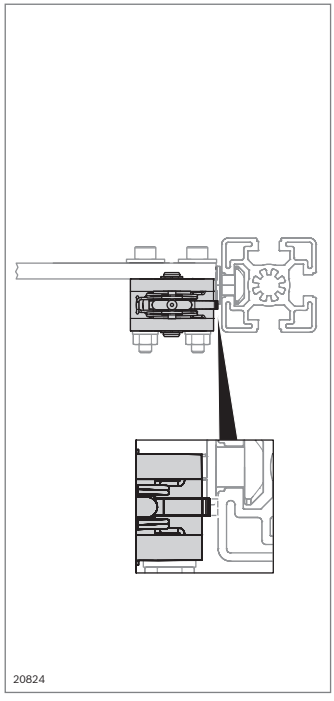

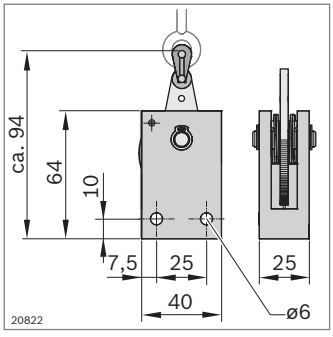

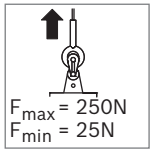

Safety catch



- The safety catch in conjunction with the other components prevents a lifting door from falling if a cable breaks
- If a cable breaks, the revolving part of the safety catch jams against a counterbearing and is wedged in position in the guide profile
- Gap dimension between safety catch body and lateral guide profile: 6 mm
- One safety catch is required for each cable.
- Max. load per safety catch: 250 N
- Min. load per safety catch: 25 N
- The counterbearing (e.g. slider **3 842 555 226**) should be mounted under the safety catch and as close as possible to it
- It can also be mounted without a frame on panel elements which have adequate transverse rigidity
- Before installation and use please read the data sheet containing notes on use which is enclosed with the product

Optional accessories:

- Slider (p. 12-3)
- Fastening material for attaching the safety catch to the lifting door
- Counterbalance (p. 9-2)
- Strut profiles (from p. 2-1)

Safety catch		No.
		3 842 546 519
Material:	Housing: Aluminum Turntable: Steel; stainless Bolt: Steel, hardened Chain lock: Nickel-plated steel Spacer disk: POM	
Scope of delivery:	Incl. chain lock for securing the cable	
Condition on delivery:	Assembled	

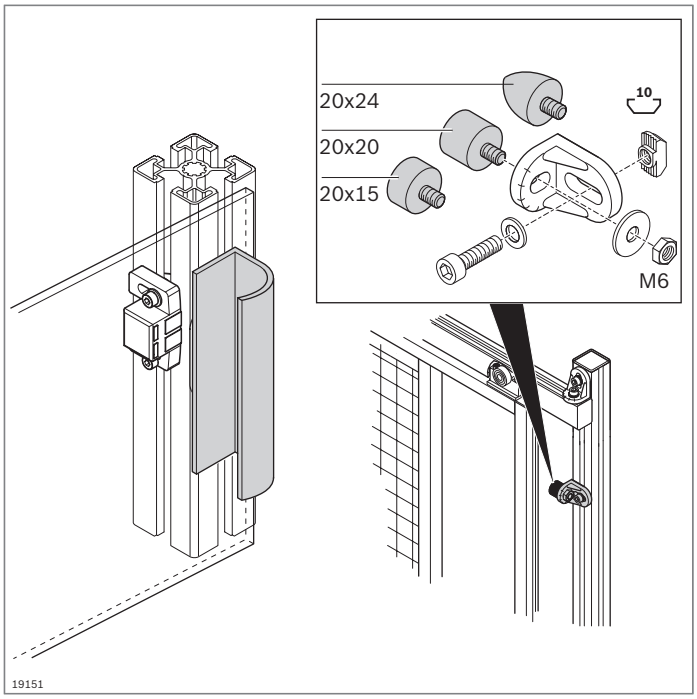

Bumper
Handle bar

Bumper

- For damping impact and noise on doors, flaps, and covers

Accessories:
Nut, T-nut M6 (p. 3-4)

Handle bar

- Can be used, for example, on covers, drawers, or doors
- Machining: Drill holes for fixing

Required accessories:
Fastening material

20x24

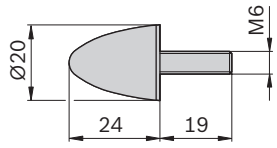

Bumper			No.
20x24		10	**3 842 510 165**
Material:	Rubber; hardness 55° shore A		

20x15, 20x20

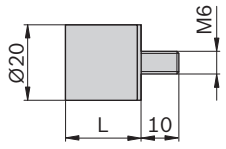

Bumper	L (mm)		No.
20x15	15	10	**3 842 510 464**
20x20	20	10	**3 842 510 462**
Material:	Rubber; hardness 55° shore A		

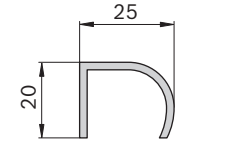

Handle bar	L (mm)		No.
	50...3000	1	**3 842 990 111 / L**
	3000	10	**3 842 500 287**
Material:	Aluminum; anodized		

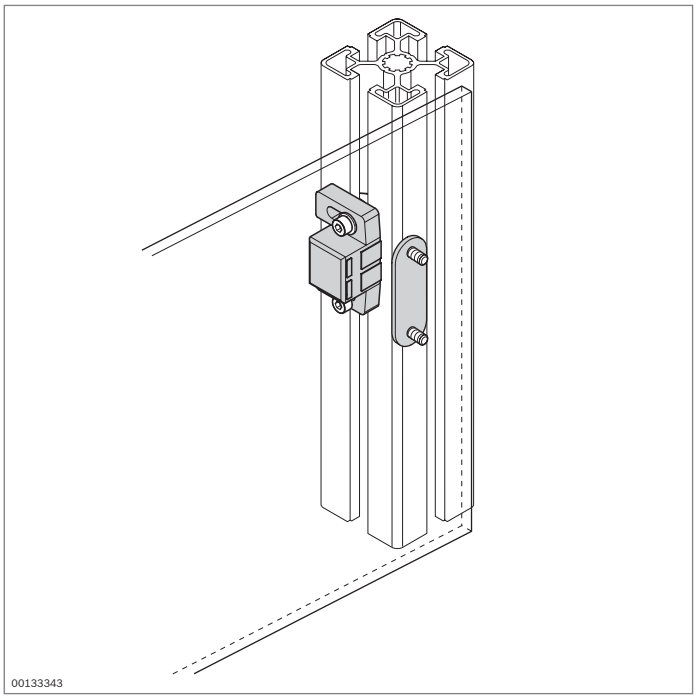

Magnet catch



- The magnet catch prevents doors and flaps from banging or being unintentionally opened
- Elongated holes to compensate for different panel element thicknesses

Accessories:
Cylinder bolt ISO 4762, washer, T-nut (p. 3-4)

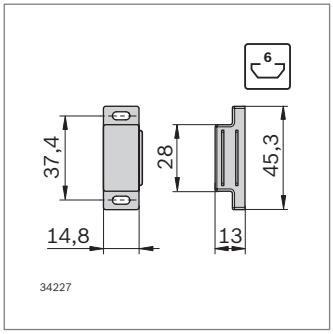

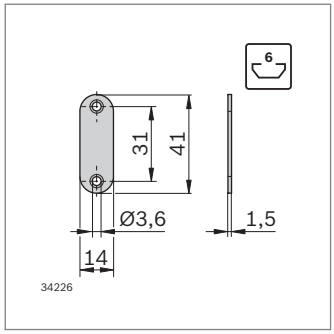

Magnet catch	Slot	No.	FS
	6	**3 842 558 323**	2xFS1
Material:	PP; white / steel; galvanized		
Scope of delivery:	Incl. counterpiece, bracket, fastening material (FS)		

FS1
ISO 4762 M3x8
DIN ISO 7089-3

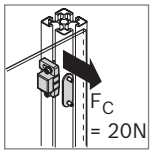

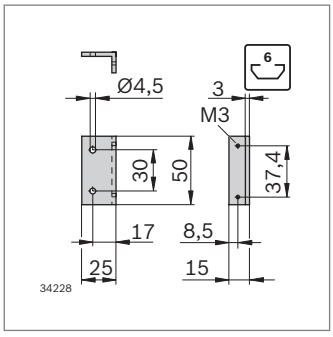

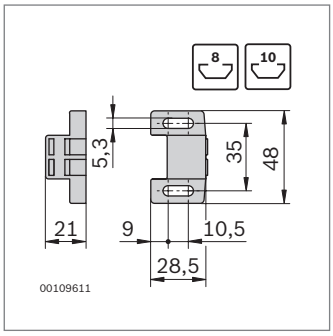

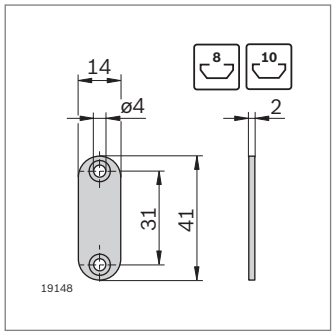

Magnet catch	Slot	No.
	8, 10	**3 842 555 568**
Material:	PA; signal gray RAL 7004 Steel; galvanized	
Scope of delivery:	Incl. counterpiece	

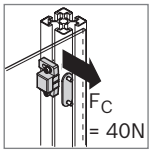

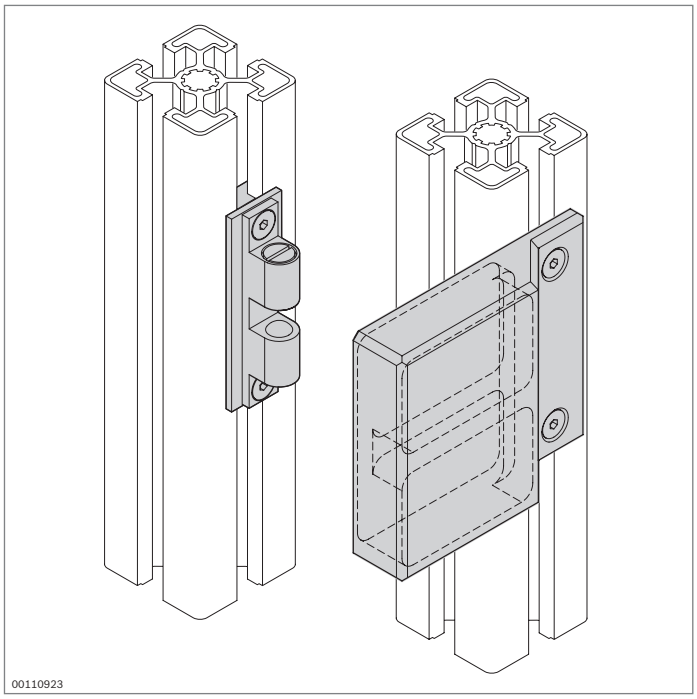

Double ball stop latch



- For arresting doors made of profile frames and for bridging door gaps
- Suitable for profiles with modular dimensions 40 mm, 45 mm, and 50 mm
- Locking also possible with varying profile spacing

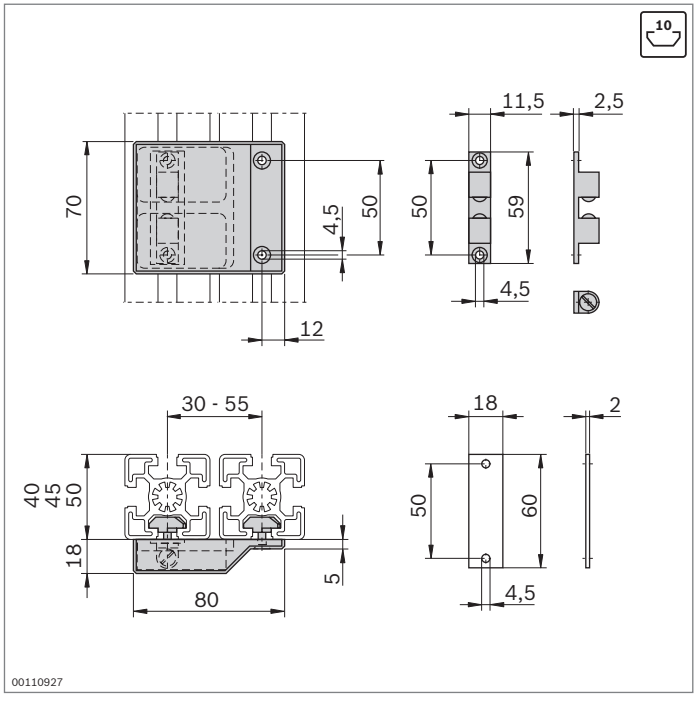

Double ball stop latch	Slot	No.	FS
	10	**3 842 530 241**	4xFS1

Material: Aluminum, black anodized
Scope of delivery: Incl. fastening material (FS)

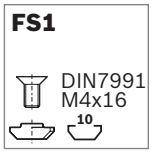

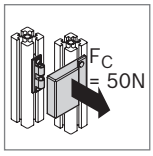

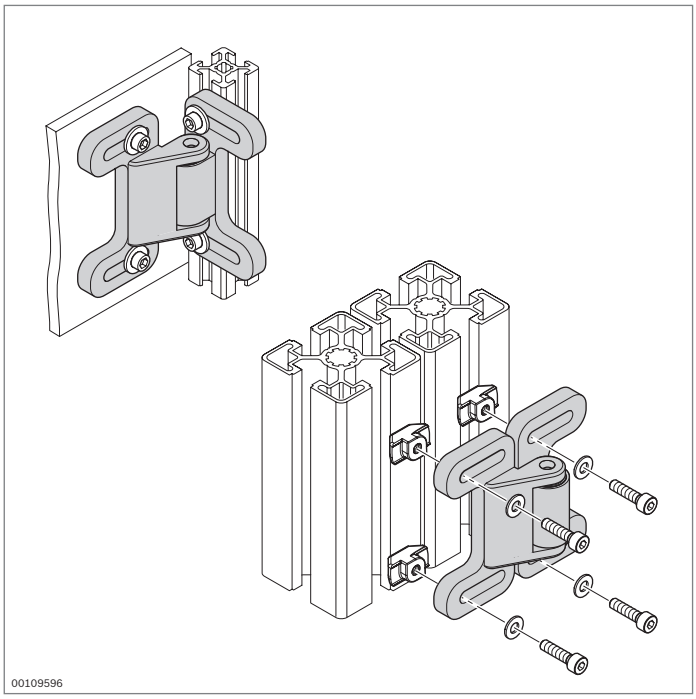

Ball catch



- Ball catch for doors and flaps
- For sliding and swing doors
- For doors with or without frames
- Elongated hole to adjust for differing spacing
- Can be used under cleanroom conditions

Accessories:
Cap screw ISO 4762, washer,
T-nut (p. 3-4)

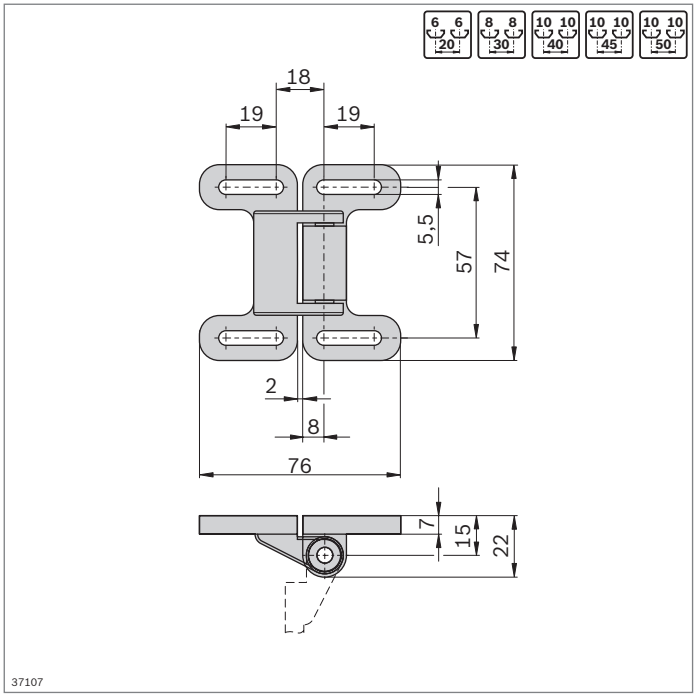

Ball catch	Color	ESD		No.
	Black		10	**3 842 524 986**
Material:	PA			

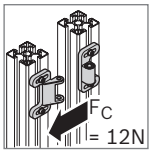

Fraunhofer IPA TESTED DEVICE
Bosch Kugelschnäpper 3842524986
Report No. BO 9903-158

Protective devices and EcoSafe partition walls



EcoSafe protective frame (p. 10-6)

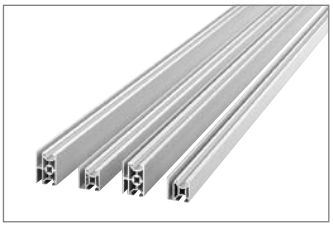

Protective grille profile (p. 10-8)



Suspension bracket, attachment kit (p. 10-10)
Tilt lever (p. 10-11)

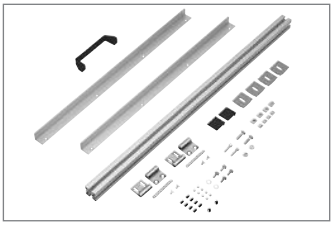

EcoSafe system door kit (p. 10-12)

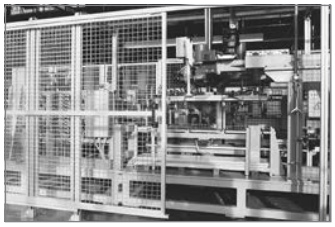

EcoSafe sliding door kit with/without superstructure (p. 10-14)

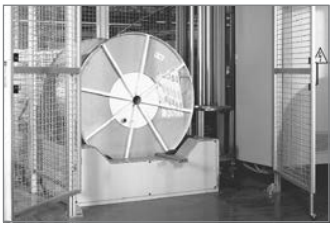

EcoSafe double door kit (p. 10-16)



Lock mechanism for double door (p. 10-17)

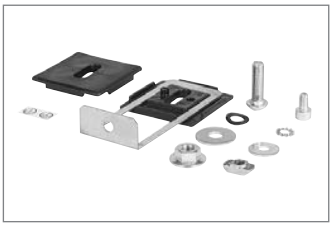

Ground terminal (p. 10-18)

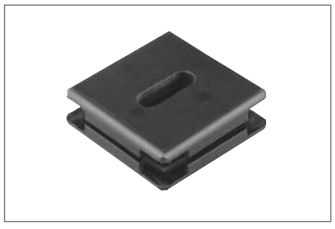

Clamping element (p. 10-19)

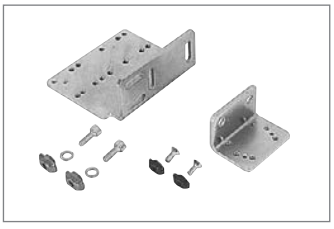

Attachment kit for safety switch (p. 10-20)



Spring clamping element (p. 10-21)

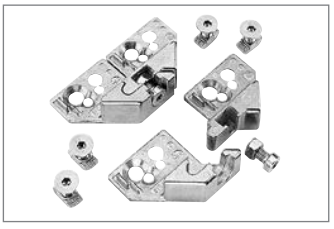

Suspension piece for frame (p. 10-22)

Eliminate safety risks in manufacturing and production by using the components for Rexroth protective devices. EcoSafe protective fence components are flexible to use and help comply with current standards and guidelines. Pre-assembled protective frames, door kits, and a well thought-out overall product range ensure fast planning as well as economical and practical implementation.

Individual protective devices such as enclosures and additional attachments can be created using the tried and tested basic mechanic elements. These two systems are mutually compatible. Rexroth therefore offers a comprehensive, overall solution for all requirements.

Compliance with standards

DIN EN ISO 12100 – Safety of machinery

- The protective fence must be designed so that it can only be opened with the aid of,, or by destroying, the fastenings.
- The actual design requires a risk assessment to be carried out according to DIN EN ISO 12100-1 in every case

DIN EN 953 – General design and construction requirements

- Rigidity, impact resistance, strength & durability of connection points, etc.

DIN EN ISO 13857

- Safety distances to prevent hazard zones being reached by upper and lower limbs

DIN EN ISO 14120

- Safety of machinery – Guards – General requirements for the design and construction of fixed and movable guards
- Rexroth protective frame tested according to pendulum test Appendix C and passed

Machinery Directive 2006/42/EC

Excerpt from the requirements that apply to protective devices:

- must be solidly built
- must be securely held in position
- must not cause any additional hazards
- must not be able to be easily circumvented or rendered ineffective
- fastenings must only be able to be undone or removed with the aid of tools
- Once the protective devices have been removed, fastenings must be remain attached or fastened to the protective devices or the machine

Safety distances

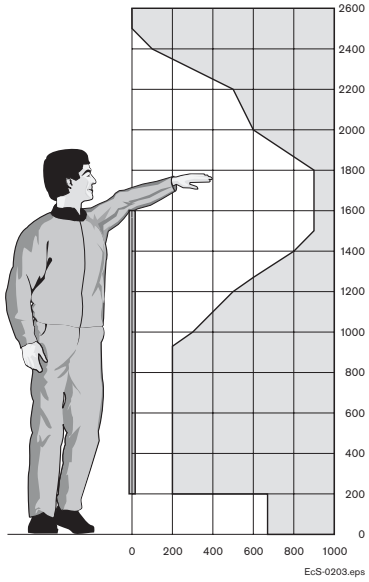

H = 1600 mm

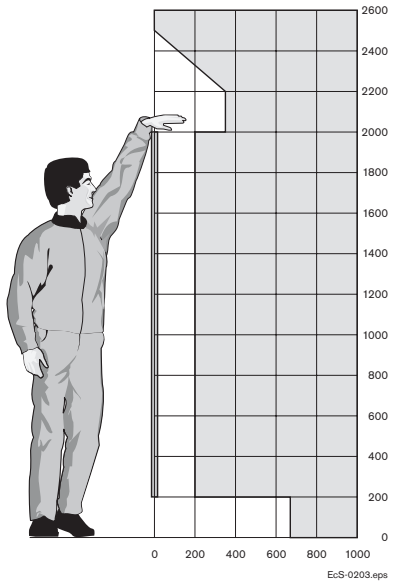

H = 2000 mm

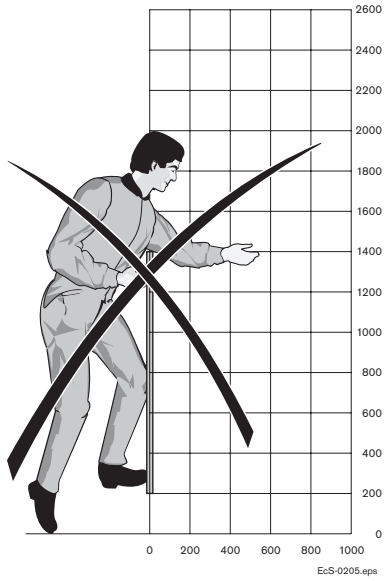

H = 1400 mm

10

The safety distances depend on the height of the protective device and the openings in the protective grille. If woven wire grilles with a mesh width of 40x40 are used, only a safety distance of 200 mm from the hazard area is required. The standard fence height of 2000 mm provides adequate protection in conjunction with a relatively small safety distance. The graphics show a profile with the safety distances for 2 different system heights (DIN EN 13857). Protective fences of under 1400 mm in height do not provide adequate protection for personnel.

Safety distances where there is 200 mm ground clearance

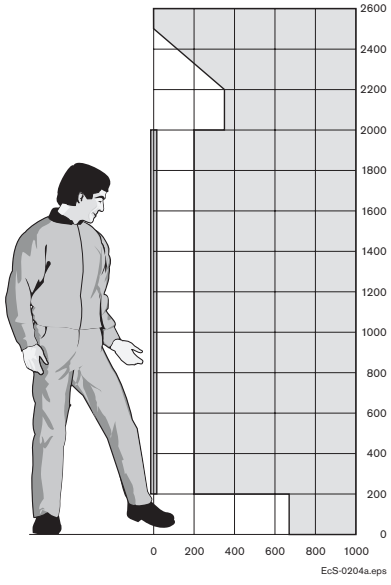

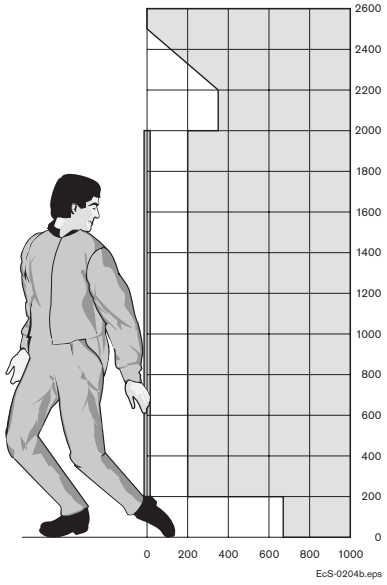

The standard distance between the protective frame and the ground is 200 mm. This gives a distance from the hazard area of 665 mm. According to the standard, openings that are larger than 180 mm allow the whole body to fit through. Depending on the customer's requirements, the distance from the ground may have to be reduced to <180 mm.

EcoSafe components for building protective fences

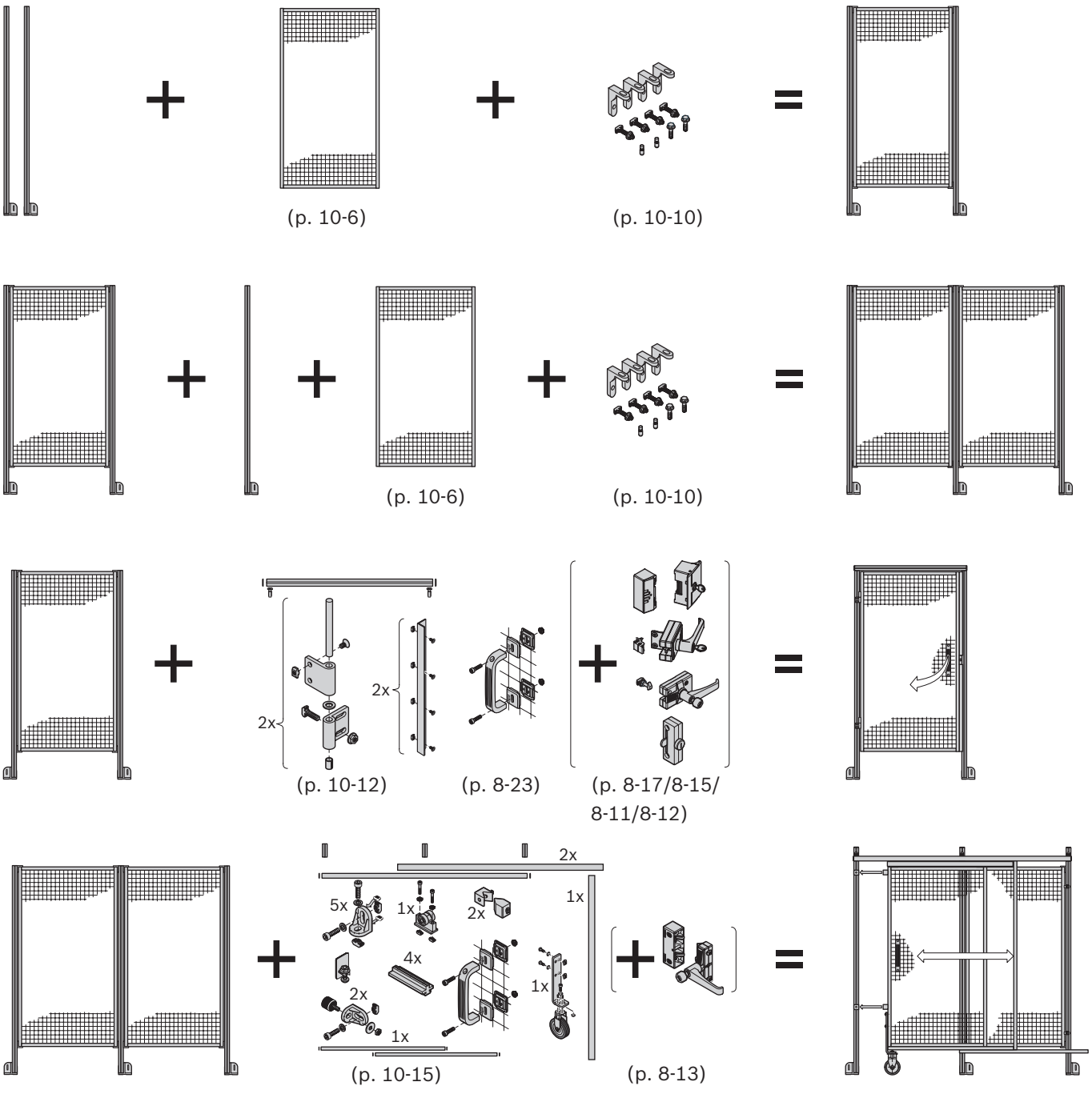

EcoSafe components for building protective fences

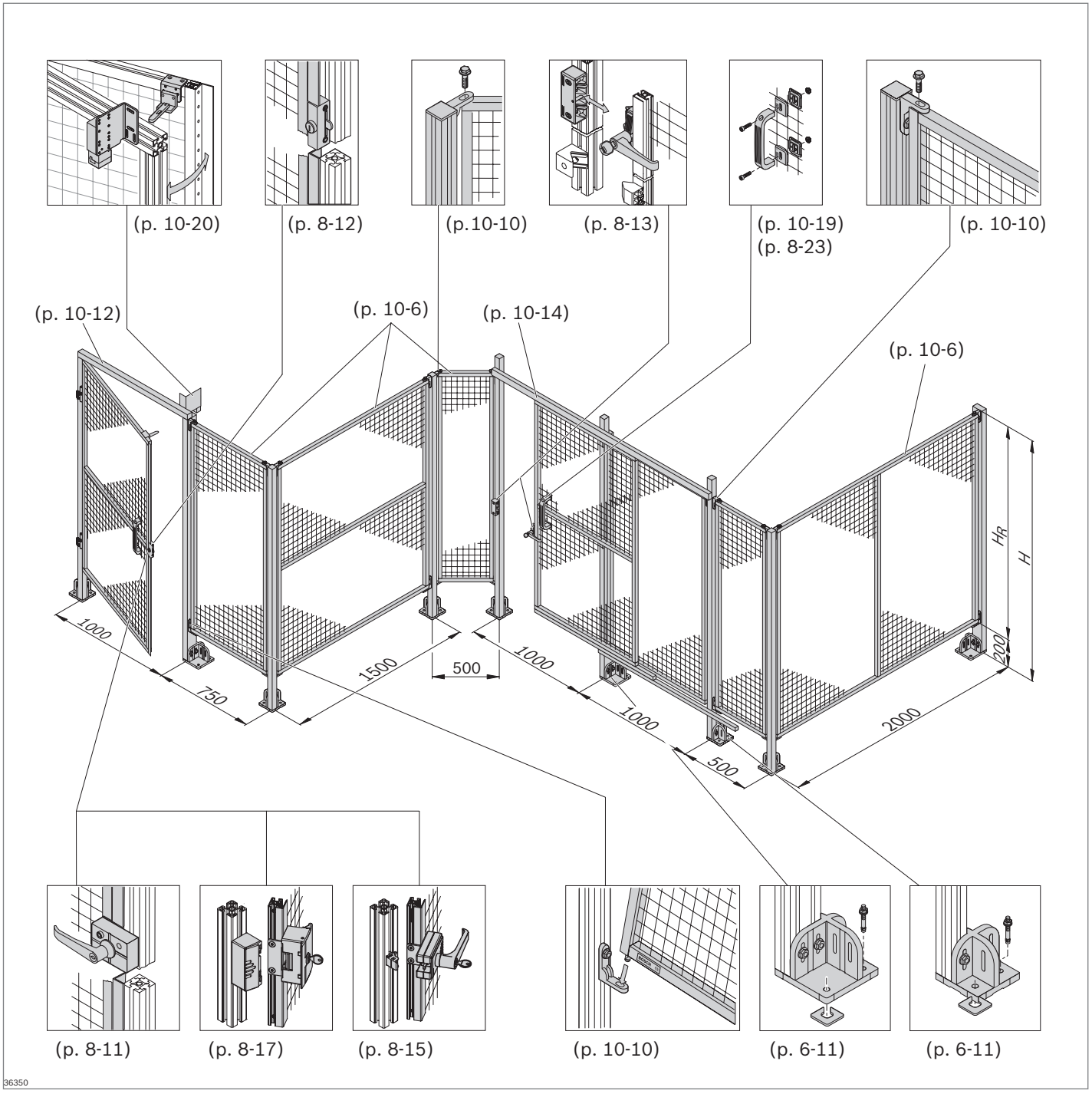

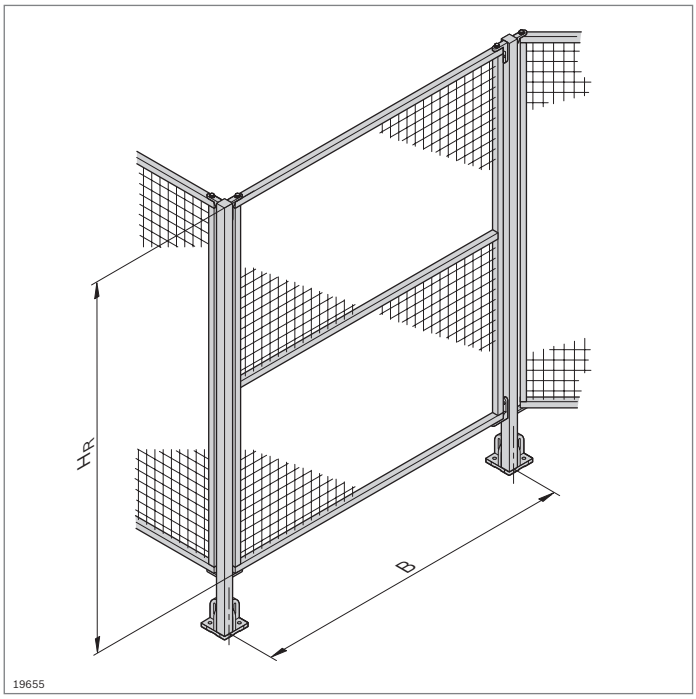

EcoSafe protective frame

- Protective frame made of protective grille profile 30x30 WG40 (p. 10-7) with woven wire grille 40x40x4
- Suitable kits enable the construction of doors (system doors, sliding doors, double doors)
- Fully assembled on delivery
- Simple mounting on the supports using the suspension brackets. Single fitter is sufficient
- Standard widths or customized dimensions
- Horizontally or vertically divided protective frames provide additional stability for large surfaces
- Color-coated woven wire grilles improve visual contrast in the protected area and facilitate recognition of access routes and emergency exit routes
- Modular dimension “B” relates to 45x45 supports

Technical data (p. 18-21)

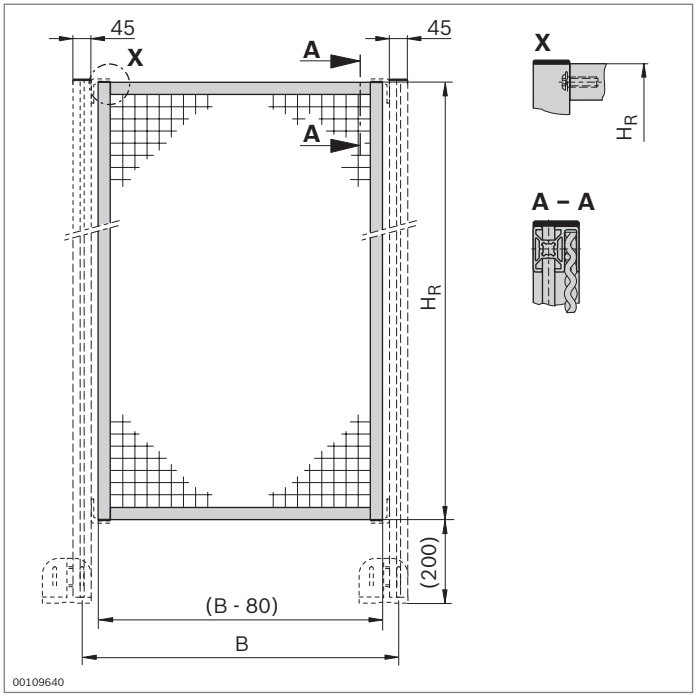

Protective frame	H_R (mm)	B (mm) No.
	1800	500 **3 842 554 282**
		750 **3 842 554 283**
		1000 **3 842 554 284**
		1500 **3 842 554 285**
	250...2300	250...1500 **3 842 994 742 / H_R, B, FA**
Material:	Frame: Aluminum; anodized Woven wire grille: Steel; hot-galvanized	
Color of woven wire grille:	FA = 0: hot-galvanized FA = 1: black; RAL 9005 (e.g. for fence) FA = 2: yellow; RAL 1023 (e.g. for doors)	

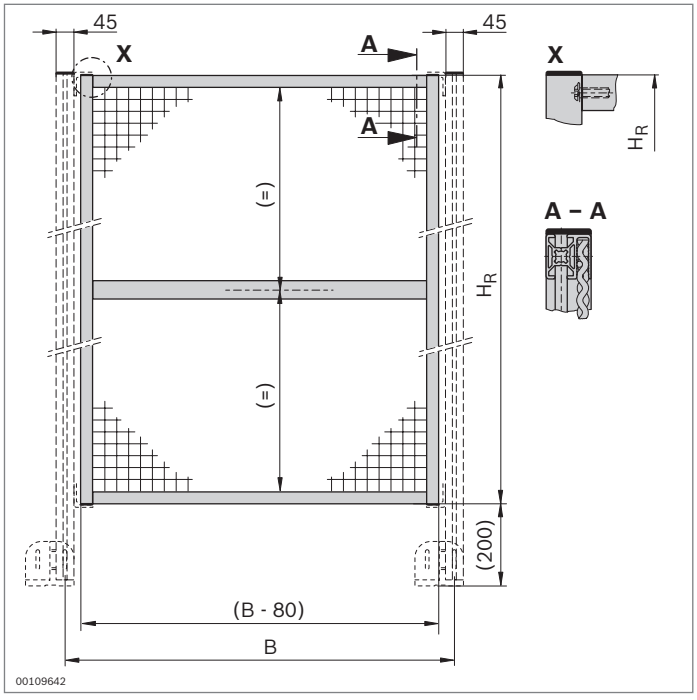

Protective frame, horizontal sections	H_R (mm)	B (mm)	No.
	1800	1000	**3 842 554 281**
	500...2300	250...2500	**3 842 994 745 / H_R, B, FA**
Material:	Frame: Aluminum; anodized Woven wire grille: Steel; hot-galvanized		
Color of woven wire grille:	FA = 0: hot-galvanized FA = 1: black; RAL 9005 (e.g. for fence) FA = 2: yellow; RAL 1023 (e.g. for doors)		

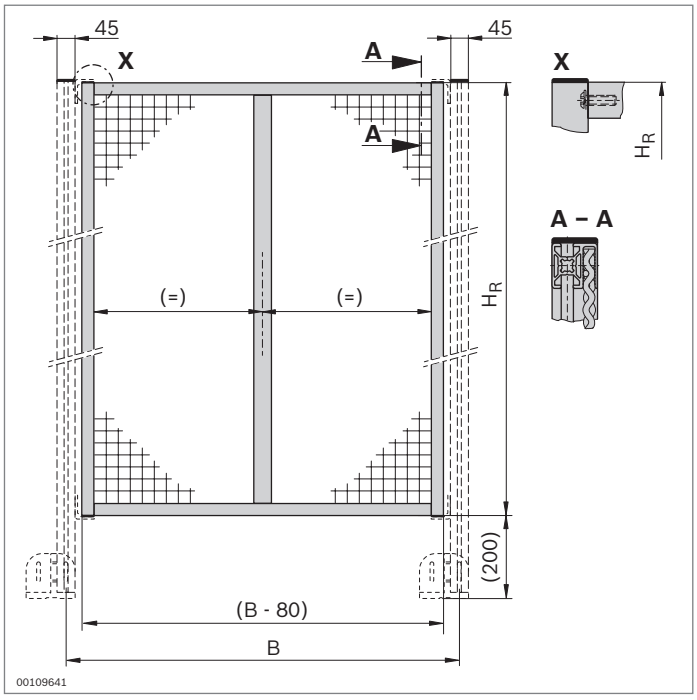

Protective frame, vertical sections	H_R (mm)	B (mm)	No.
	1800	2000	**3 842 554 280**
	250...2300	500...3000	**3 842 994 744 / H_R, B, FA**
Material:	Frame: Aluminum; anodized Woven wire grille: Steel; hot-galvanized		
Color of woven wire grille:	FA = 0: hot-galvanized FA = 1: black; RAL 9005 (e.g. for fence) FA = 2: yellow; RAL 1023 (e.g. for doors)		

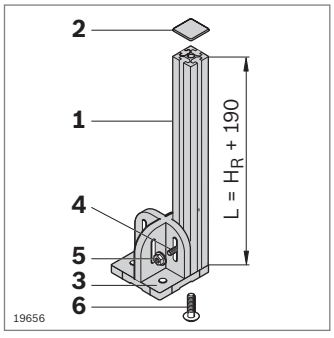

Individually construct the supports using MGE components

Component		No.	Pcs	Page
1	Profile 45x45L	**3 842 992 425 / L**	1	2-35
2	Cover cap	**3 842 548 753**	1	2-35
3	Base plate 120x120	**3 842 527 553**	1	6-11
4	T-bolt M8x30	**3 842 528 721**	2	3-6
5	Flange nut M8	**3 842 345 081**	2	3-6
6	Central bolt S12x30-T50	**3 842 530 236**	1	3-41

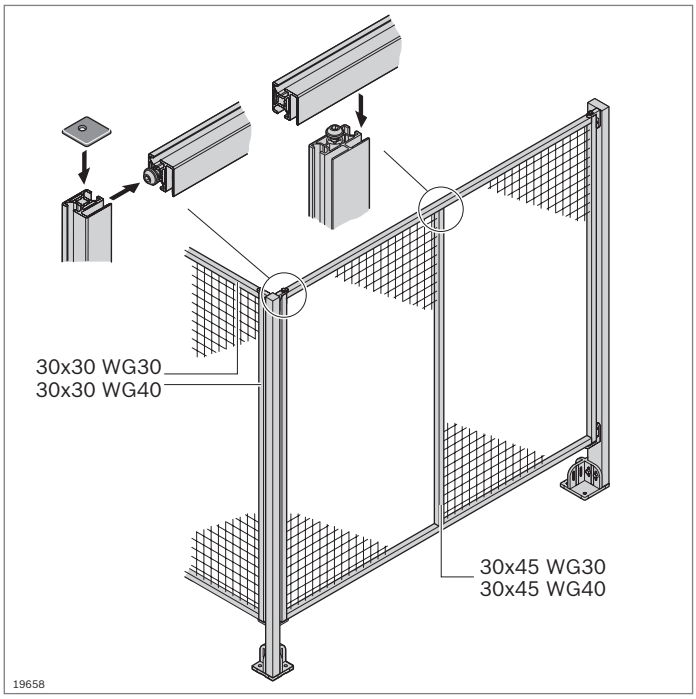

Protective grille profiles

8

- For the low-cost construction of protective devices with woven wire grilles WG30 and WG40
- Fastening of woven wire grilles: Directly in the special profile slot
- Fastening of panel elements: In the special profile slot using spring clamping elements (accessories)
- The profiles are connected using a central bolt (profile finishing required)
- Modular dimension “B” relates to 45x45 supports

Required accessories:

- Central bolt (p. 3-41)
- Woven wire grille (p. 10-6)
- Spring clamping elements (p. 10-21)

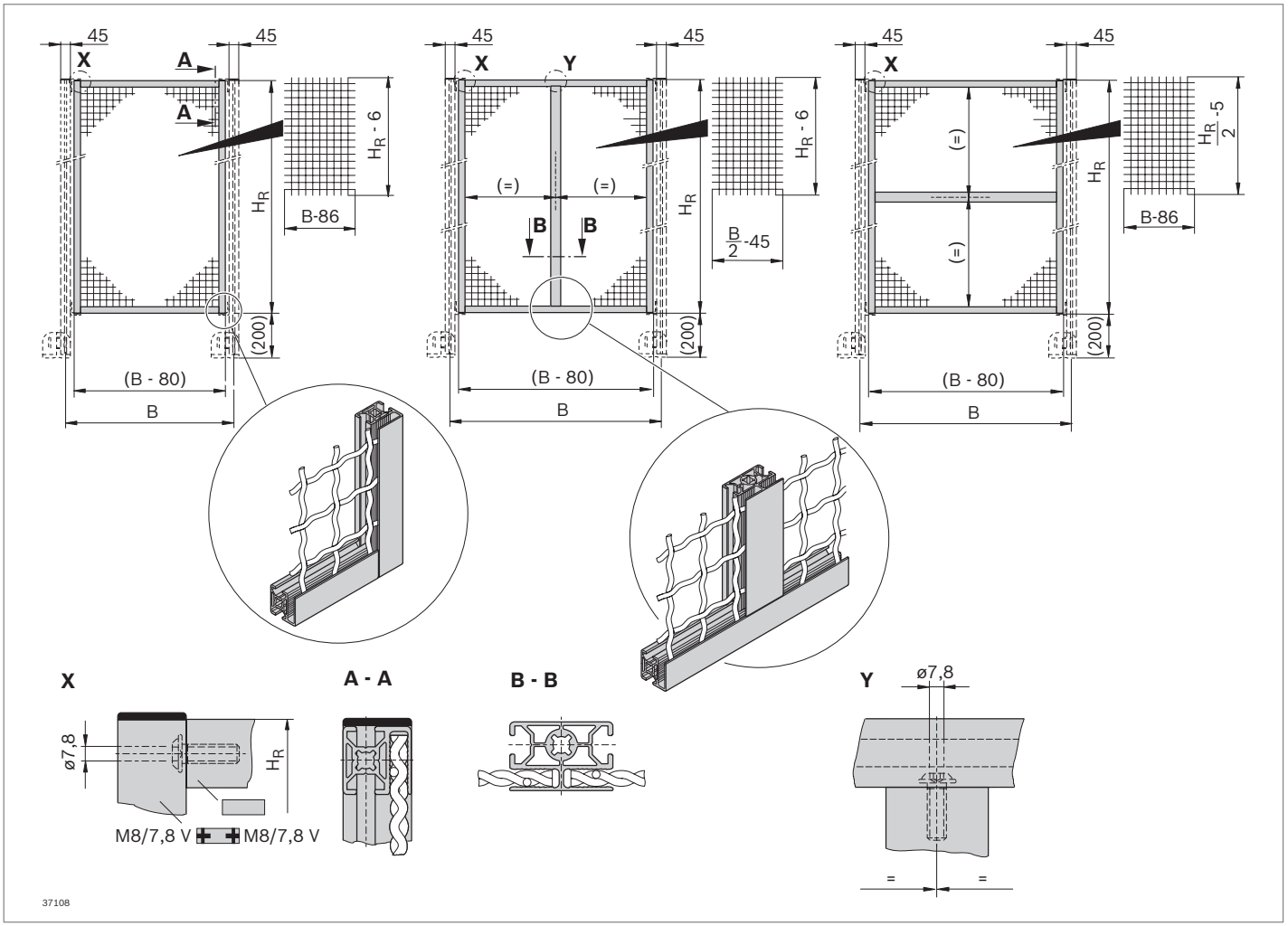

30x30 WG30

A = 3,2 cm²
I_x = 2,5 cm⁴
I_y = 3,0 cm⁴
W_x = 1,6 cm³
W_y = 1,9 cm³
m = 0,9 kg/m

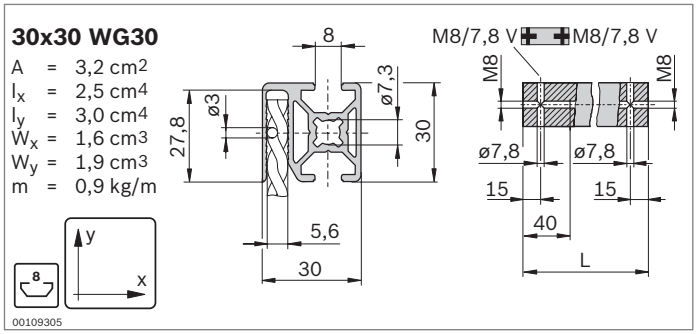

Protective grille profile 30x30 WG30			L (mm)	No.
1 pc			100 ... 6070	**3 842 992 970 / L**
1 pc	M8/7,8V	M8/7,8V	100 ... 6000	**3 842 992 977 / L**
20 pcs			6070	**3 842 557 227**
Material:	Aluminum; anodized			

30x30 WG40

A = 3,2 cm²
I_x = 2,4 cm⁴
I_y = 2,9 cm⁴
W_x = 1,5 cm³
W_y = 1,8 cm³
m = 0,9 kg/m

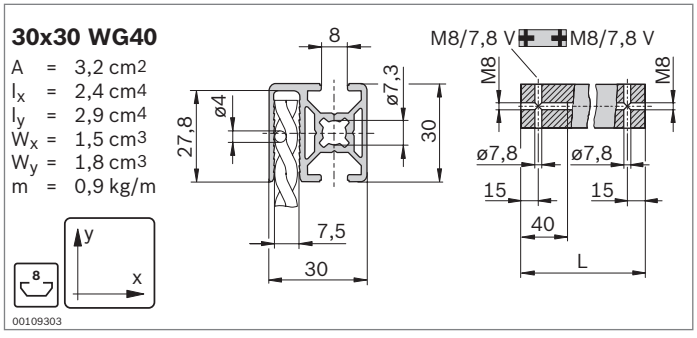

Protective grille profile 30x30 WG40			L (mm)	No.
1 pc			100 ... 6070	**3 842 992 972 / L**
1 pc	M8/7,8V	M8/7,8V	100 ... 6000	**3 842 992 978 / L**
20 pcs			6070	**3 842 557 229**
Material:	Aluminum; anodized			

30x45 WG30

A = 4,5 cm²
I_x = 7,3 cm⁴
I_y = 4,2 cm⁴
W_x = 3,2 cm³
W_y = 2,7 cm³
m = 1,2 kg/m

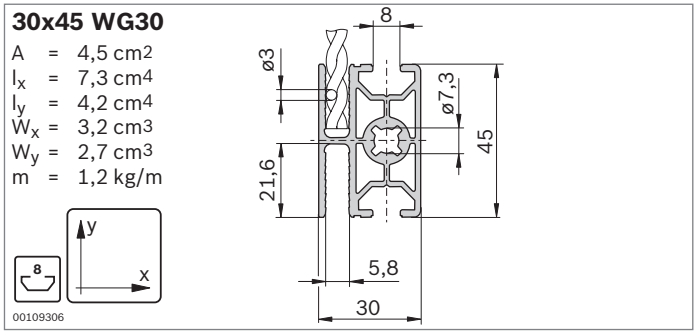

Protective grille profile 30x45 WG30			L (mm)	No.
1 pc			100 ... 6070	**3 842 992 971 / L**
20 pcs			6070	**3 842 557 228**
Material:	Aluminum; anodized			

30x45 WG40

A = 4,5 cm²
I_x = 6,9 cm⁴
I_y = 4,1 cm⁴
W_x = 4,3 cm³
W_y = 1,8 cm³
m = 1,2 kg/m

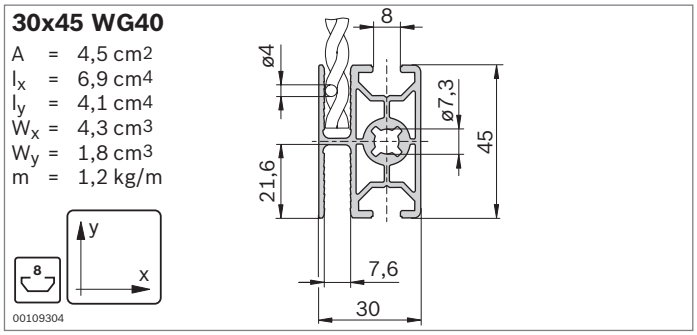

Protective grille profile 30x45 WG40			L (mm)	No.
1 pc			100 ... 6070	**3 842 992 973 / L**
20 pcs			6070	**3 842 557 240**
Material:	Aluminum; anodized			

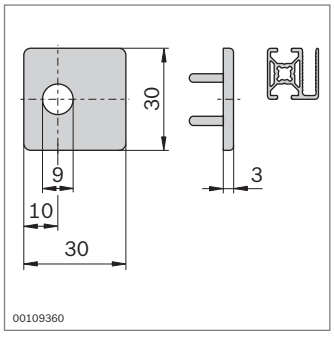

▶ Cover cap for a more attractive appearance and to prevent injuries

Cover cap	Color		No.
30x30	Black	100	**3 842 522 345**
Material:	PA; black		

10

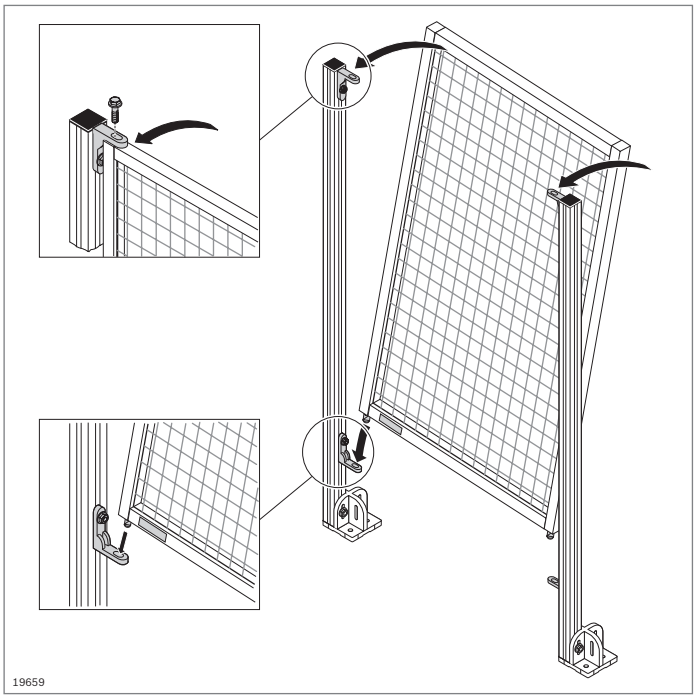

Suspension bracket
Safety strip safety kit

10

Suspension bracket

- For mounting the EcoSafe protective frame on the support at various angles
- Suspension bracket with centering lugs as anti-torsion element

Safety strip safety kit

- Safe and inexpensive
- Easy assembly; can be retrofitted
- Patented
- Meets the requirements of Machinery Directive 2006/42/EC Screw remains connected to the suspension bracket after loosening

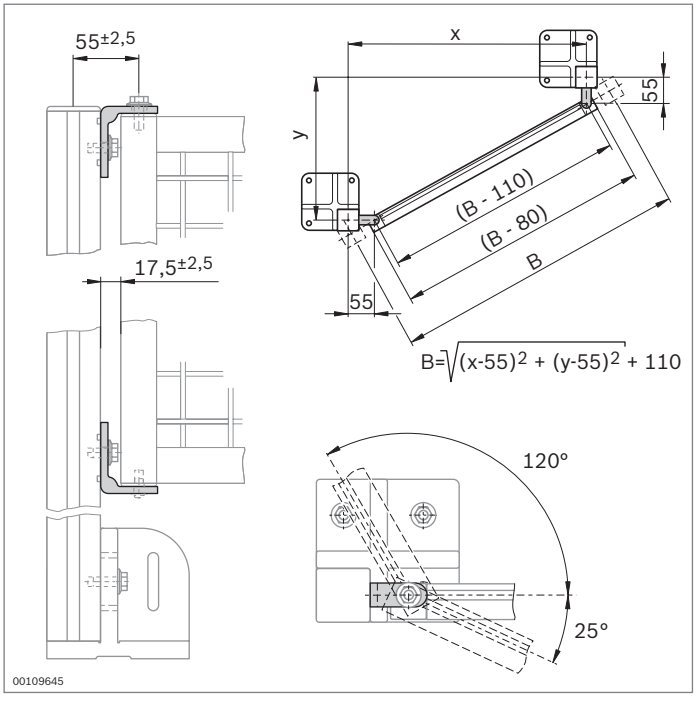

Suspension bracket	No.	FS
Set	**3 842 522 481**	4x FS1, 2x FS2, 2x FS3

Material:	Diecast zinc Fastening material: Steel; galvanized
Scope of delivery:	In a set with four brackets, incl. fastening material (FS)

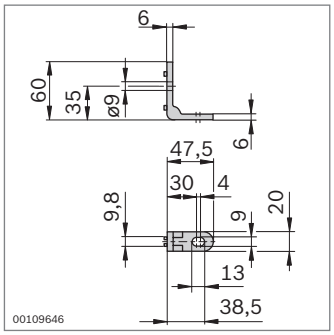

FS1

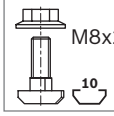

FS2



FS3



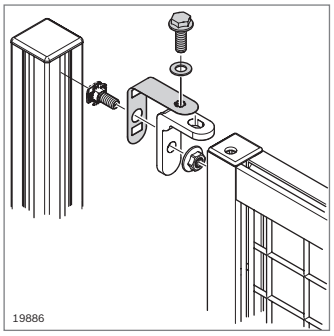

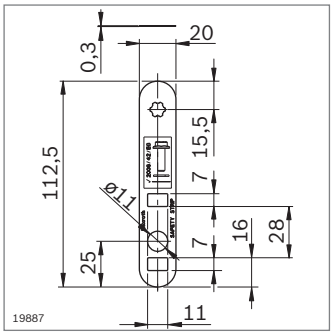

Safety strip safety kit	10	No.	FS
		3 842 542 146	FS1

Material:	PP granulate
Scope of delivery:	Incl. fastening material (FS)

FS1

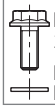

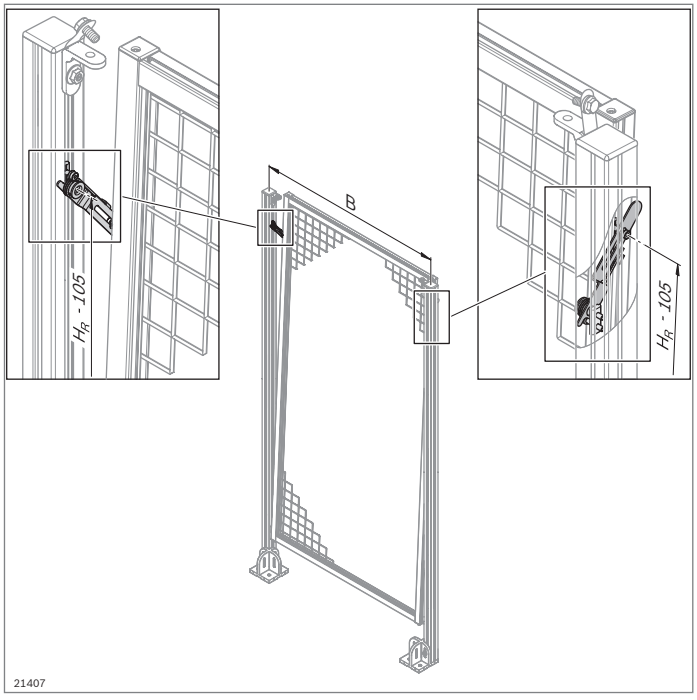

Tilt lever

- For compliance with the requirement in Machinery Directive 2006/42/EC relating to the detaching of protective frames
  - The long-arm spring is designed so that it tilts the protective frame outwards, making it clear that the protective frame is detached
  - Protective frame cannot fall out
- Easily removable EcoSafe protective frames
- Can be retrofitted
- Installation on both sides recommended for EcoSafe protective frames of width B >1500 mm

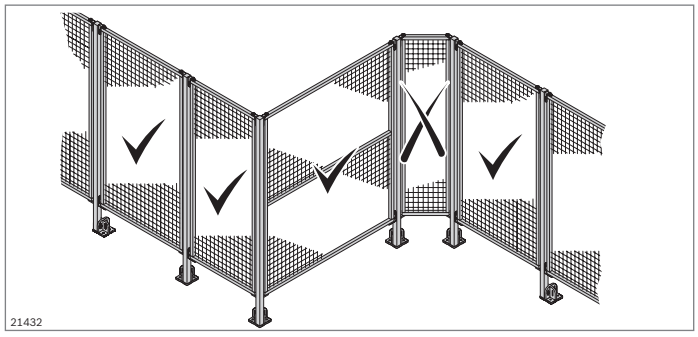

Possible installation situation:

- Not suitable for installing the protective frame across a corner

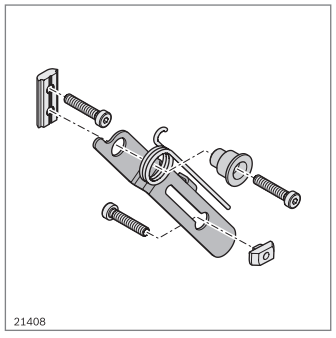

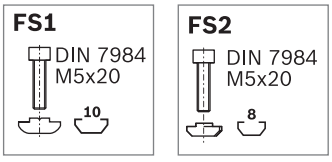

Tilt lever		No.	FS
		3 842 546 560	FS1, FS2
Material:	Holding plate: Stainless steel Spacer: Aluminum Long-arm spring: Spring steel		
Scope of delivery:	Holding plate, spacer, long-arm spring, fastening material (FS)		

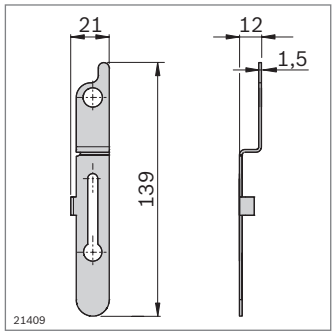

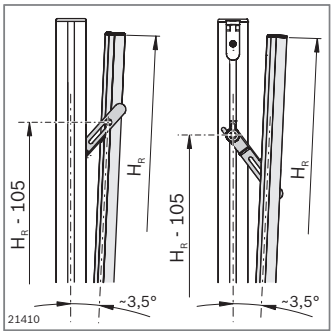

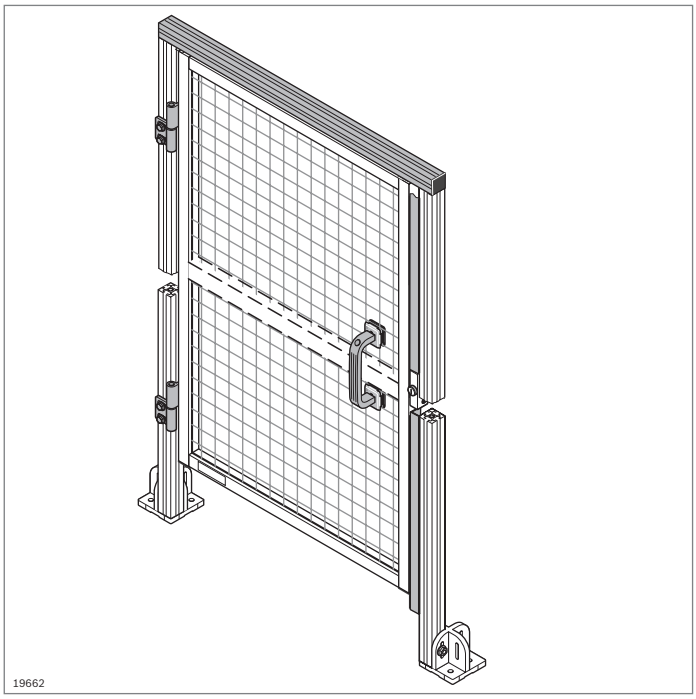

EcoSafe system door kit

- For constructing an EcoSafe system door in the modular dimension system
- Use of finished protective frame as a door
- For doors that open to the left or right
- Required components:
  - Assembly kit for system door
  - Protective frame (p. 10-6)

Optional accessories:

- Door lock (p. 8-11, 8-12, 8-15, 8-16, 8-17)
- Attachment kit for safety switch (p. 10-20)

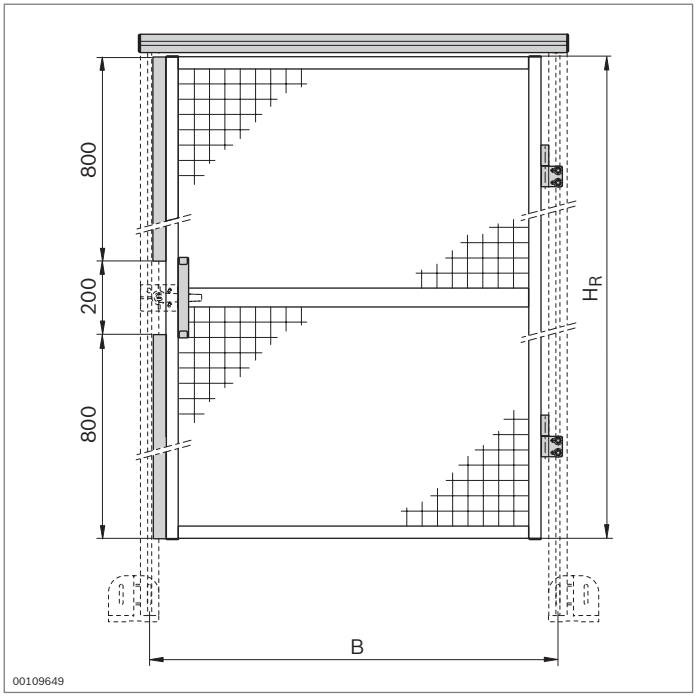

Assembly kit for system door	H_R (mm)	B (mm)	No.
	1800	1000	**3 842 523 166**
	1800	750	**3 842 523 165**

Scope of delivery: 2 x hinge, 2 x stop rail, profile as door lintel, bow-type handle, incl. fastening material

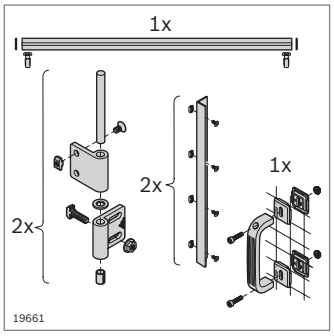

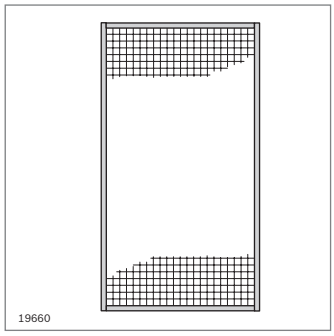

Selection of suitable protective frames

Protective frame	H_R (mm)	B (mm)	No.
Protective frame, horizontal sections	1800	1000	**3 842 554 281**
Protective frame	1800	750	**3 842 554 283**

Material: Aluminum, anodized; woven wire grille and fastening material: Steel; galvanized

Scope of delivery: Fully assembled

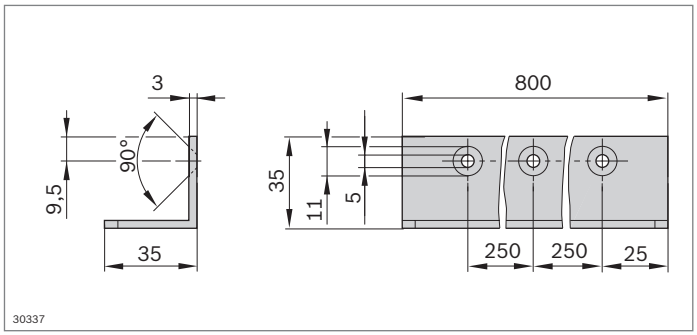

- System door stop rail for self-assembly

Stop rail	No.
	3 842 523 170

10

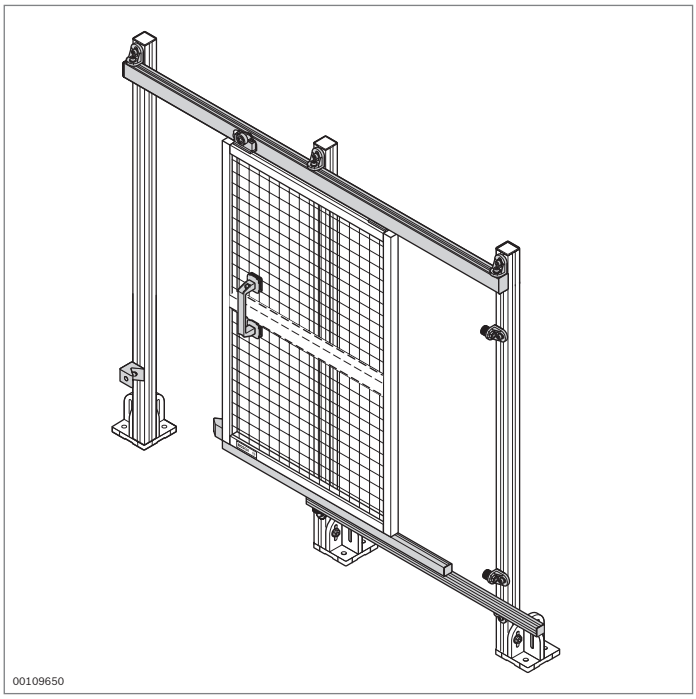

EcoSafe assembly kit for sliding door with superstructure

- Assembly kit for constructing an EcoSafe sliding door with superstructure in the modular dimension system
- Use of finished protective frame as a door
- Easy subsequent installation in a protective fence
- Rollers with ball bearings for smooth running
- For doors that open to the left or right
- Required components:
  - Assembly kit for sliding door with superstructure
  - Protective frame (p. 10-6)

Optional accessories:
Door lock (p. 8-11/8-13)

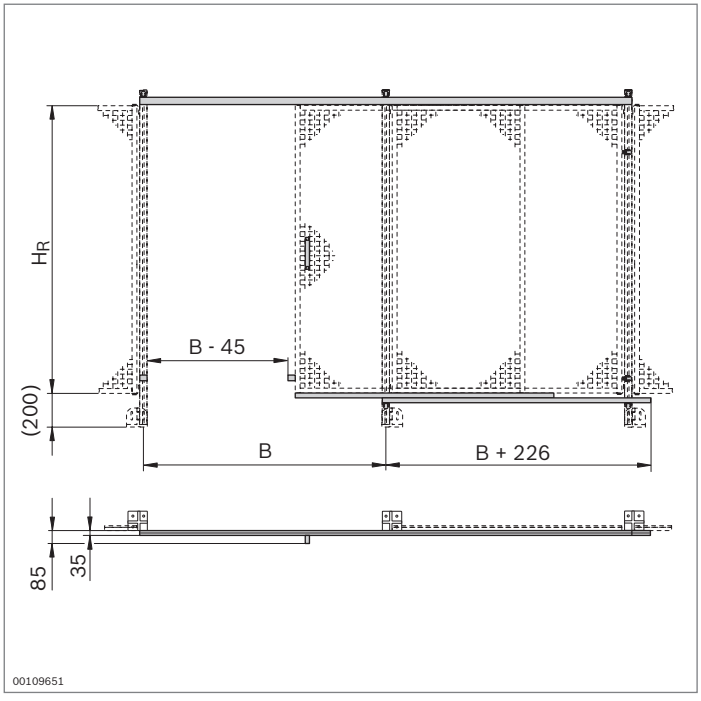

Assembly kit for sliding door with superstructure	H_R (mm)	B (mm)	No.
	1800	1000	**3 842 524 163**
	1800	1500	**3 842 524 164**

Scope of delivery: 2 x bumper, 2 x slider, 2 x trolley, profile for door superstructure, 7 x mounting bracket, stop kit, 2 x profile for sliding door

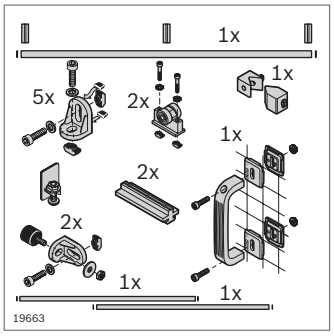

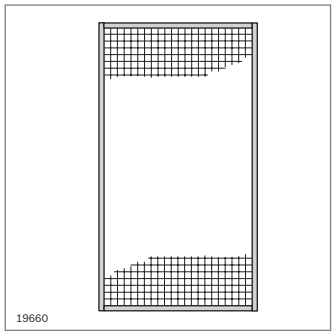

Selection of suitable protective frames

Protective frame	H_R (mm)	B (mm)	No.
	1800	1000	**3 842 554 284**
	1800	1500	**3 842 554 285**

Material: Aluminum, anodized; woven wire grille and fastening material: Steel; galvanized
Scope of delivery: Fully assembled

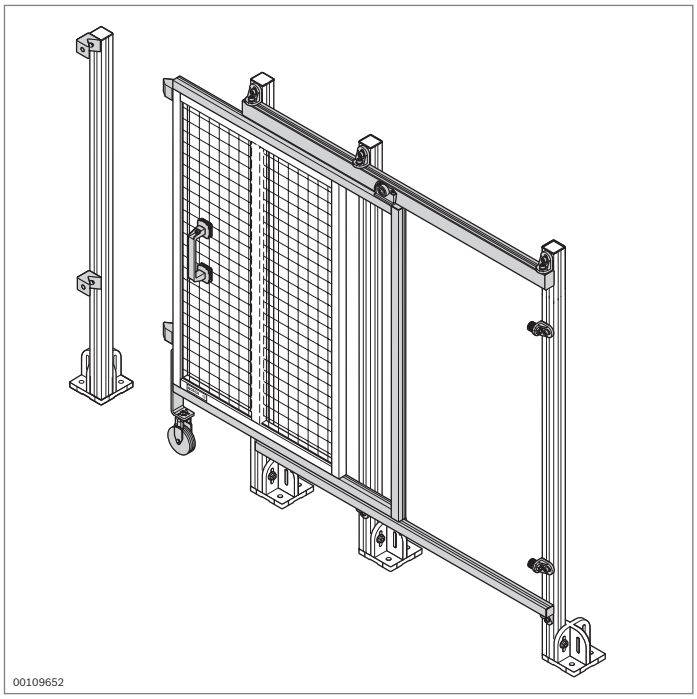

EcoSafe assembly kit for sliding door without superstructure

- Assembly kit for constructing an EcoSafe sliding door without superstructure in the modular dimension system
- Use of finished protective frame as a door
- Rollers with ball bearings for smooth running
- For doors that open to the left or right
- Required components:
  - Assembly kit for sliding door without superstructure
  - Protective frame (p. 10-6)
- Also available with leg sets with 45x90L profiles for more stability

Optional accessories:
Door lock (p. 8-11/8-13)

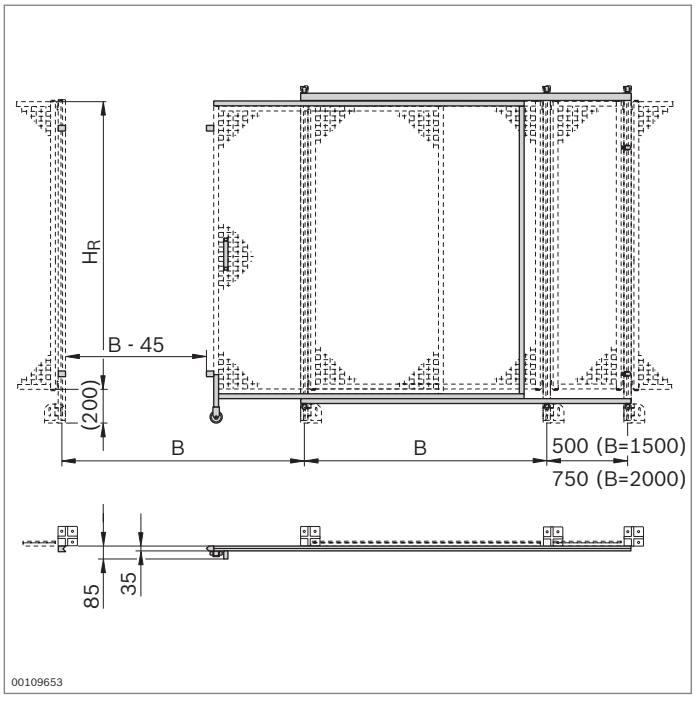

Assembly kit for sliding door without superstructure	H_R (mm)	B (mm)	No.
	1800	1500	**3 842 524 165**
	1800	2000	**3 842 524 166**

Scope of delivery: 2 x bumper, 3 x slider, trolley, profile for door superstructure, 8 x mounting bracket, 2 x stop kit, 2 x profile for sliding door, incl. fastening material

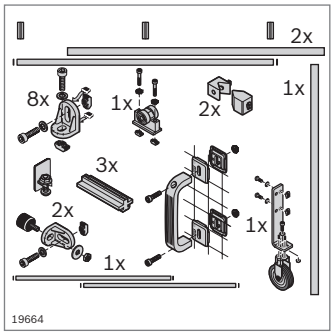

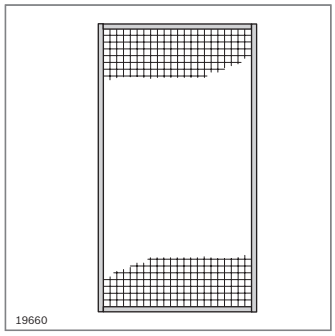

Selection of suitable protective frames

Protective frame	H_R (mm)	B (mm)	No.
Protective frame	1800	1500	**3 842 554 285**
Protective frame, vertical sections	1800	2000	**3 842 554 280**

Material: Aluminum, anodized; woven wire grille and fastening material: Steel; galvanized
Scope of delivery: Fully assembled

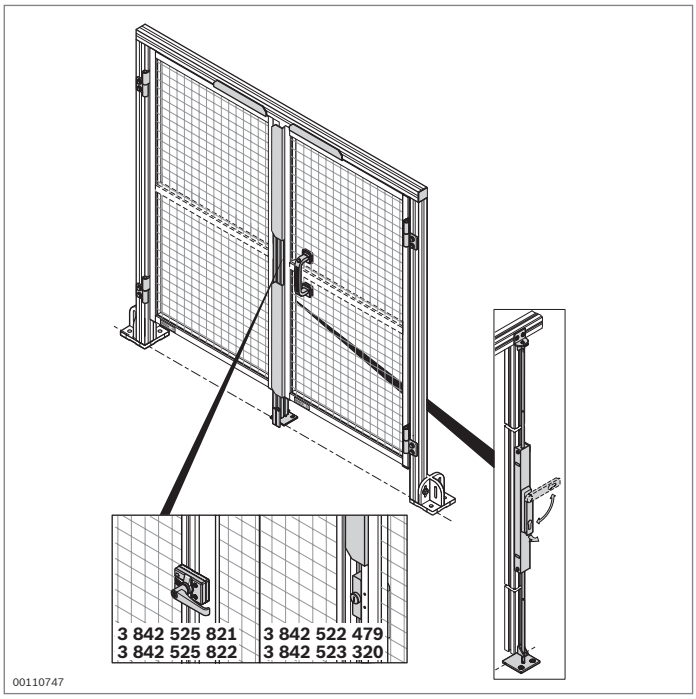

EcoSafe double door kit

- Assembly kit for constructing an EcoSafe double door in the modular dimension system
- Use of finished protective frame as a door
- Easy subsequent installation in a protective fence
- Optional installation of a standard lock cylinder in the lock mechanism for the double door
- Required components:
  - Double door assembly kit
  - Two protective frames (p. 10-6)

Optional accessories:
- Door lock (p. 8-11/8-12)
- Attachment kit for safety switch (p. 10-20)
- Conventional lock cylinder 35/35 is not included in the scope of delivery

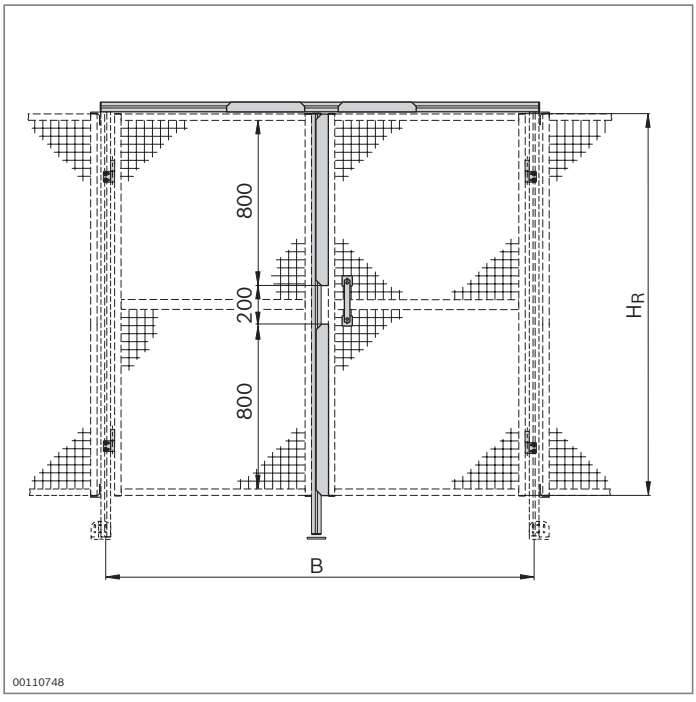

Double door assembly kit	H_R (mm)	B (mm)	No.
	1800	1500	**3 842 525 781**
	1800	2000	**3 842 525 782**

Scope of delivery: Lock mechanism assembly kit, profile for door superstructure, profile for door stop, 4x hinges, lock bracket, base plate, bow-type handle, 2x horizontal brackets, 2x vertical brackets, rail, fastening material

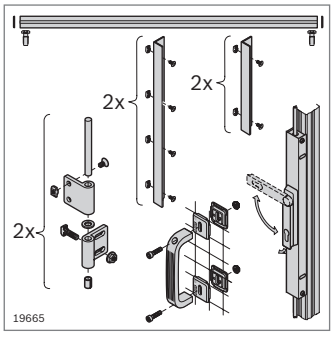

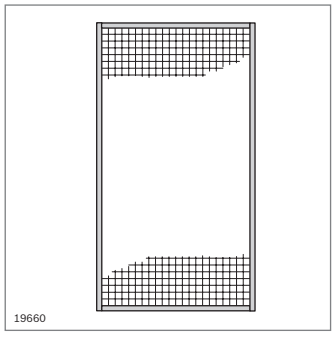

Selection of suitable protective frames

Protective frame	H_R (mm)	B (mm)	No.
Protective frame	1800	750	**3 842 554 283**
Protective frame, horizontal sections	1800	1000	**3 842 554 281**

Material: Aluminum, anodized; woven wire grille and fastening material: Steel; galvanized

Condition on delivery: Fully assembled

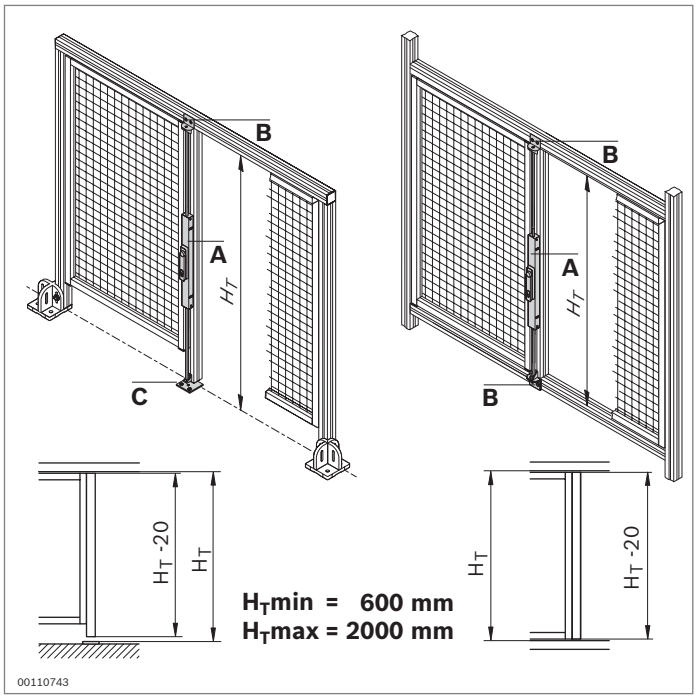

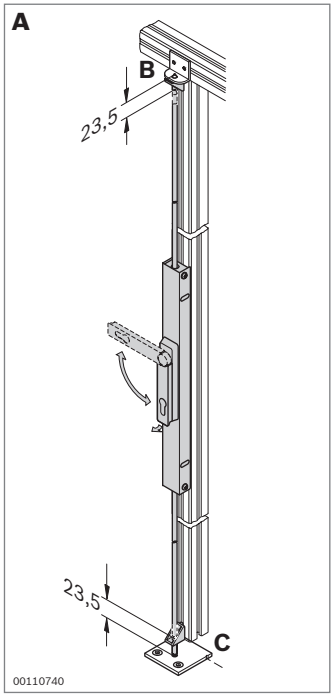

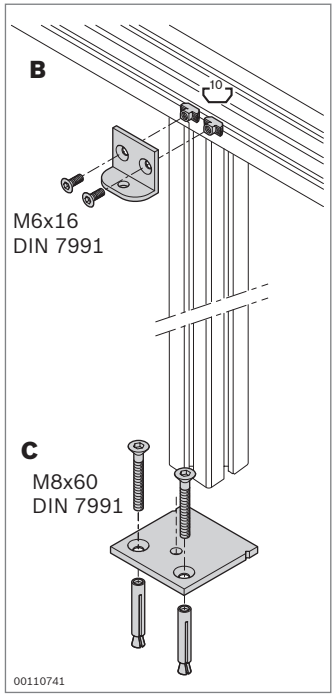



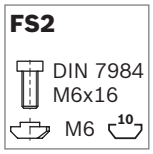







Lock mechanism for double door



- Components for constructing a lock mechanism for double doors
- Optional installation of a standard lock cylinder in the lock mechanism for the double door
- Locking mechanism assembly kit (**A**) for individually designed double doors with $H_T$max = 2000 mm
- Lock bracket (**B**) for mounting the lock bolt bar
- Base plate (**C**) for mounting the lock bolt bar; fastened to the floor with supplied dowels. For doors which can be driven through

Optional accessories:
Conventional lock cylinder 35/35 is not included in the scope of delivery

Lock mechanism assembly kit	No.	FS
A	**3 842 525 780**	2xFS1, 2xFS2, 4xFS3

Material:	Housing: Aluminum Door handle: PA; black Lock bolt: Steel; galvanized Lock bolt guide bracket: Diecast zinc
Scope of delivery:	Lock mechanism for double door, incl. fastening material (FS)

Lock bracket	No.	FS
B	**3 842 526 786**	2xFS4

Material:	Aluminum; anodized
Scope of delivery:	Incl. fastening material (FS)

Base plate	No.	FS
C	**3 842 526 787**	2xFS5

Material:	Floor plate: Steel; stainless Floor dowel: Steel; galvanized
Scope of delivery:	Incl. fastening material (FS)

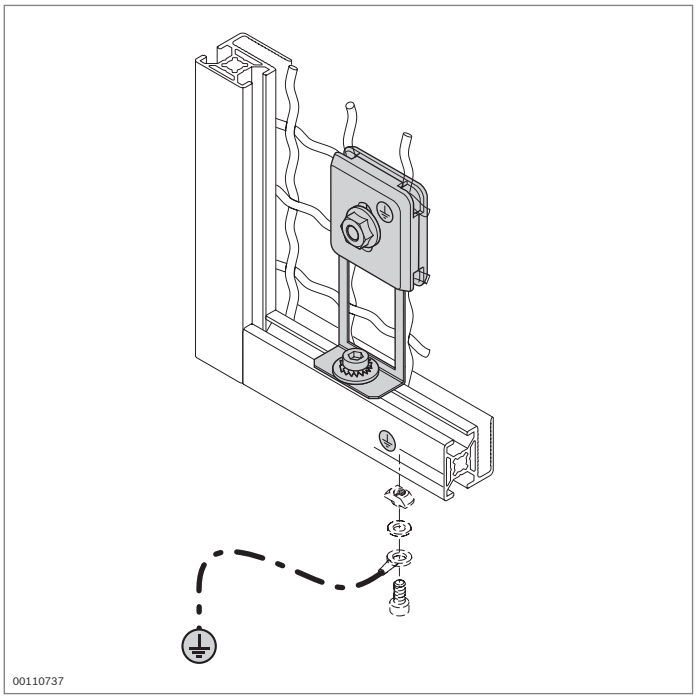

Ground terminal



- For creating an electrically conductive connection between the woven wire grille and protective frame
- Connect the protective conductor via the ESD-conductive connection elements (e.g. T-nut)
- Guarantees safe conduction of short-circuit currents up to a rated current of 63 A

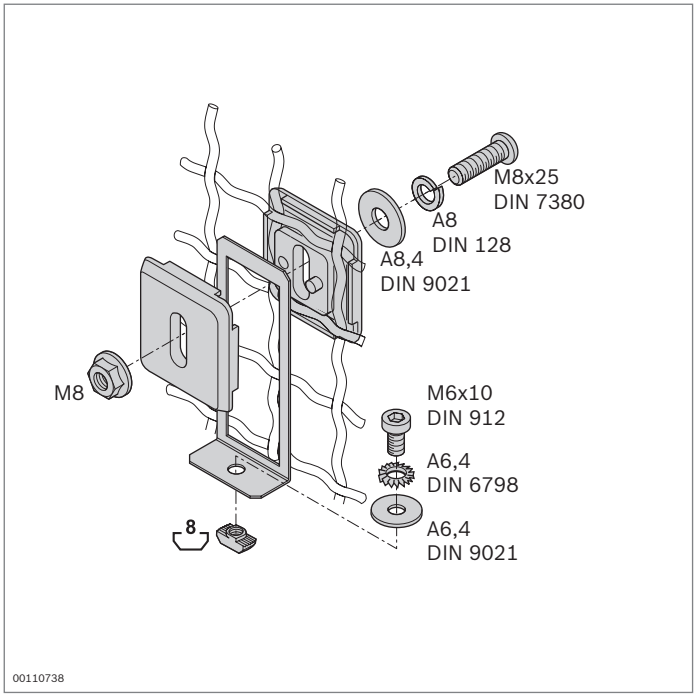

Ground terminal		No.	FS
		3 842 525 833	FS1, FS2
Material:	Ground terminal: Steel; stainless Clamping element: PA; black Fastening material: Steel; galvanized		
Scope of delivery:	Incl. fastening material (FS)		

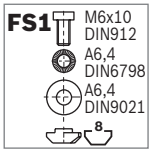

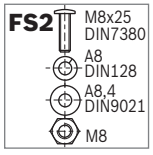

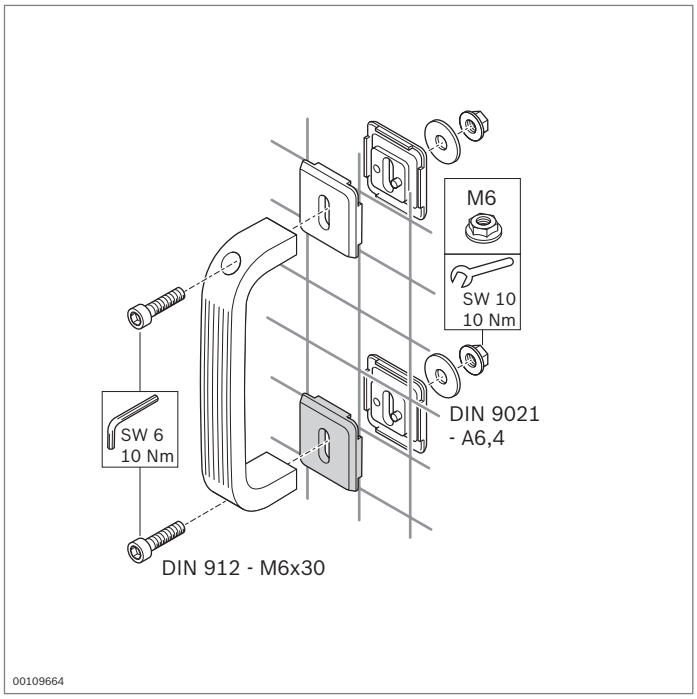

Clamping element

- For attaching handles, information boards or warning signs to woven wire grilles 40x40x4 and 30x30x3
- Clamping with opposing pairs of clamping elements

Required accessories:
Fastening material; see drawing

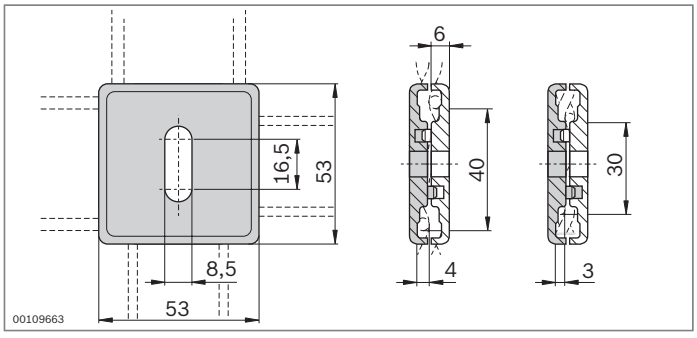

Clamping element			No.
		20	**3 842 523 308**
Material:	PA66, black		

10

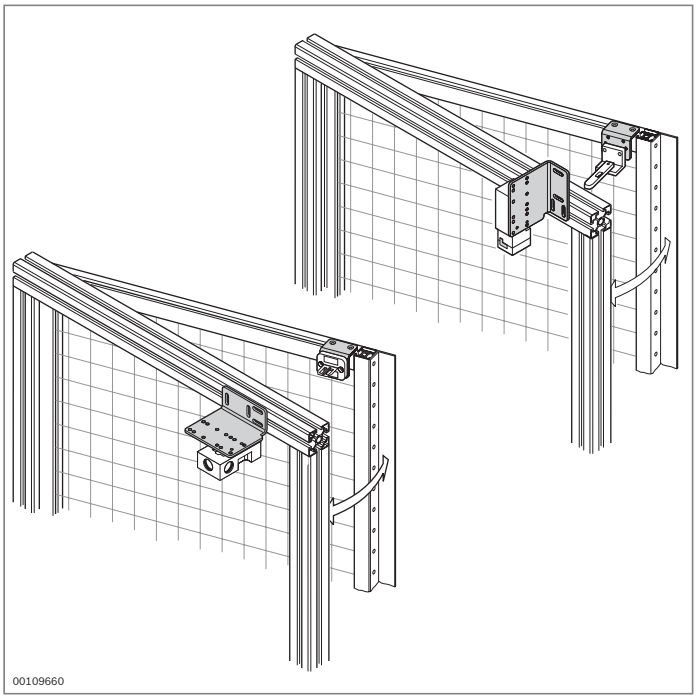

Attachment kit for safety switch



- For installing standard commercially available safety switches on EcoSafe system doors

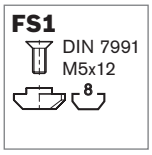



Attachment kit for safety switch		No.	FS
For safety switch	**For actuator**		
Euchner NZ 1 VZ...	024298; 024299	**3 842 522 475**	2xFS1, 2xFS2
Euchner NZ 2 VZ...	024298; 024299		
Euchner NZ 1 VS...	024298; 024299		
Euchner NZ 2 VS...	024298; 024299		
Schmersal AZ15,...	AZ15/16-B2-1747		
Schmersal AZ16,...	AZ15/16-B2-1747		
Schneider Electric XCS - A...	XCS-Z03		
Schneider Electric XCS - C...	XCS-Z03		
Schneider Electric XCS - PA...	XCS-Z13		
Schneider Electric XCS - TE...	XCS-Z13		
Euchner TZ...	024298; 024299	**3 842 522 476**	2xFS1, 2xFS2
Schneider Electric XCS - LE/ LF...	XCS-Z03		
Schneider Electric XCS - TE...	XCS-Z13		
Schneider Electric XCS - PA...	XCS-Z13		
Schmersal AZM161...	AZM161-B1		
Schmersal AZM161...	AZM161-B1E	**3 842 522 477**	2xFS1, 2xFS2

Material: Steel; galvanized
Scope of delivery: Incl. adapter plate, bracket, incl. fastening material (FS)

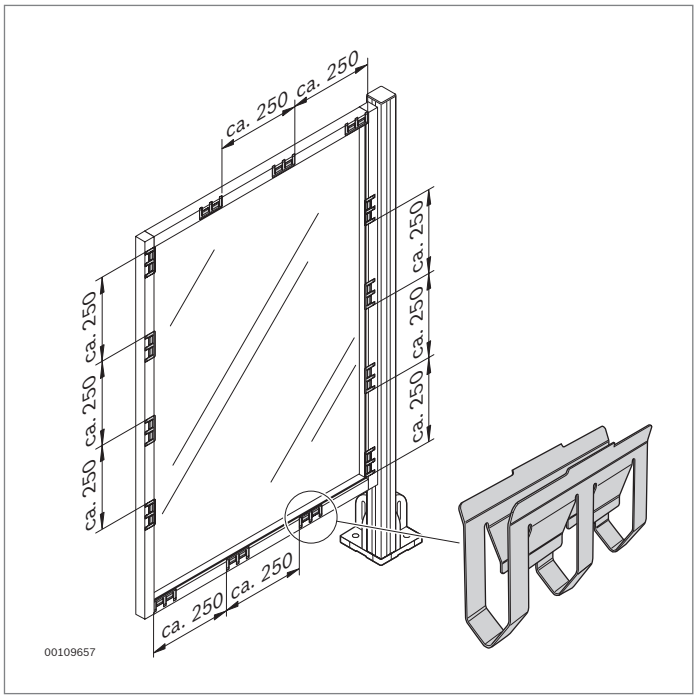

Spring clamping element

- For clamping panel elements in EcoSafe protective fence profiles 30x30 WG30 and 30x30 WG40
- Play-free clamping
- Individual sections of the protective frames can be filled as you wish

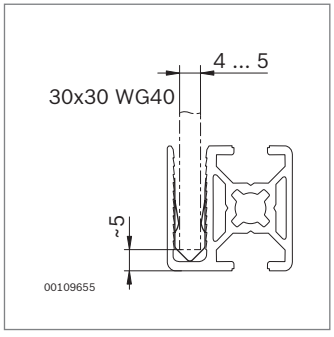

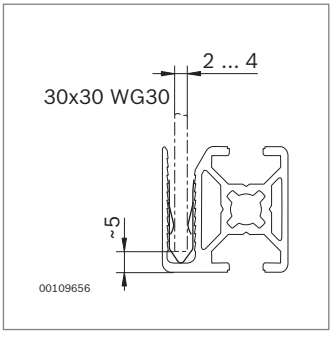

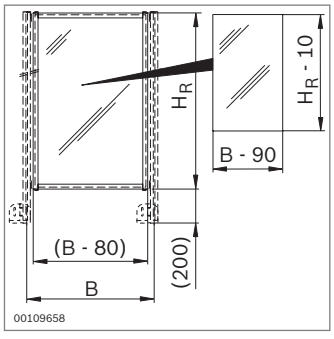

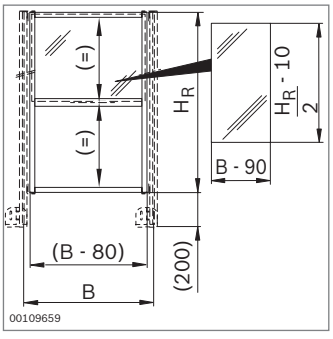

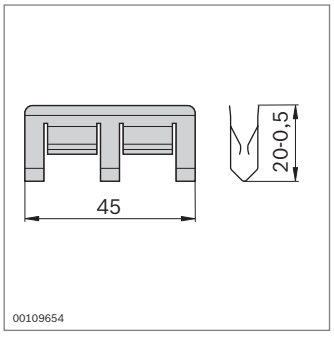

Spring clamping element			No.
		100	**3 842 525 014**
Material:	Spring steel, stainless		

10

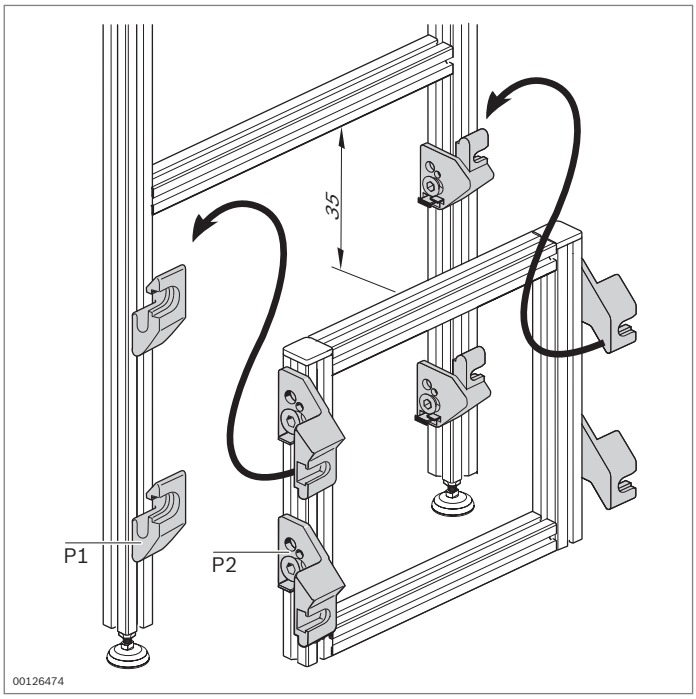

Suspension piece for frames



- Very quick fitting and removal of pre-assembled frames in prepared supporting structures
- Protection against unintentional lifting out due to both parts of the suspension piece being screwed in
- Notes on compliance with the Machinery Directive 2006/42/EC: Please note that fastening parts may work loose during disassembly

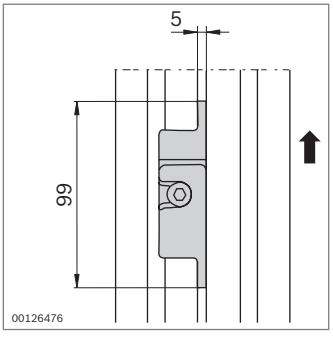

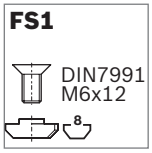

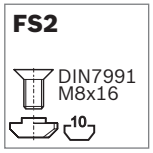

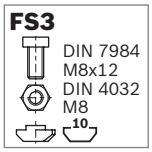

Suspension piece	P1	P2	No.	FS
Set	45	30	**3 842 515 531**	4x FS1, 4x FS2, 4x FS3
Set	45	45	**3 842 515 863**	8x FS2, 4x FS3

Material:	Diecast zinc
Scope of delivery:	Four suspension pieces, incl. fastening material (FS)

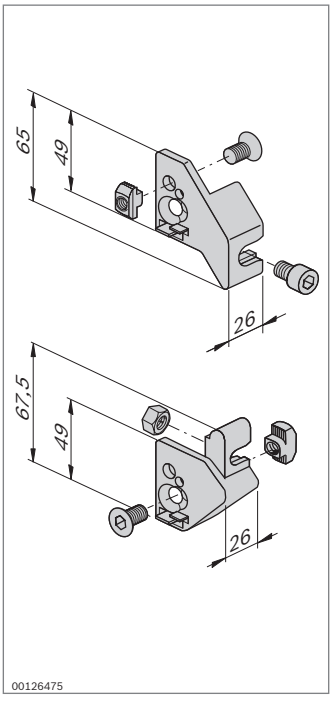

Installation elements



Cable duct PVC (p. 11-2)



Cable duct AL (p. 11-3)



Cable bracket (p. 11-10)



Quick-lock (p. 11-11)

Electrical leads must be neatly laid. Because only if they have been installed in an orderly way can electrical faults be easily located and eliminated.

Cable ducts and cable brackets are therefore important elements in terms of maintenance-friendly electrical installation on all kinds of constructions made of basic mechanic elements.

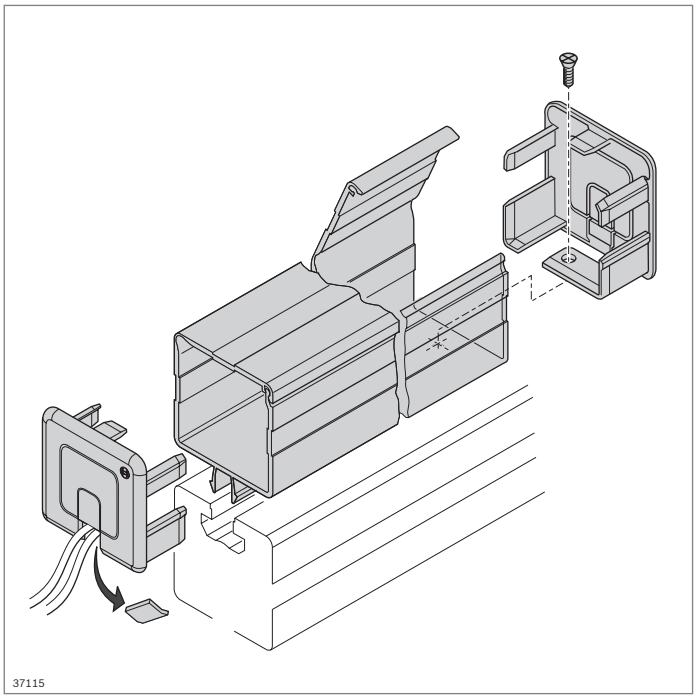

Cable duct

- Cable duct for routing electrical lines
- Captive cover
- Very easy to access
- Large usable volume
- Simple, fast assembly – just clips into the 10 mm slot
- Cover cap for sealing the cable duct with pre-punched holes for running cables through
- VDE certified
- An ESD-conductive connection made of plastic between the profile and the cable duct must be ensured by a suitable design solution, e.g. screw

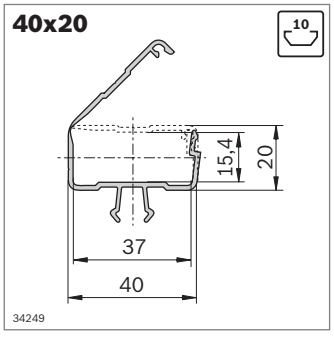

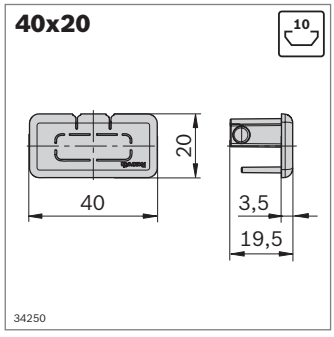

	L (mm)	Color	ESD		No.
Cable duct 40x20	2000	Black	⏚	1	**3 842 555 670**
Cover cap 40x20		Black	⏚	10	**3 842 555 671**
Cable duct 40x20	2000	Signal gray		1	**3 842 557 443**
Cover cap 40x20		Signal gray		10	**3 842 557 444**

Material: Cable duct: PVC
Cover cap: PP
Scope of delivery: Cover cap incl. fastening screws

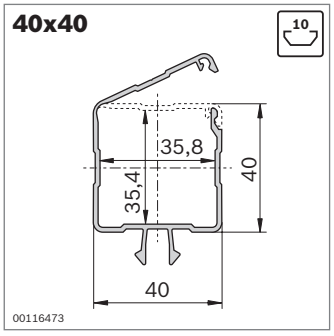

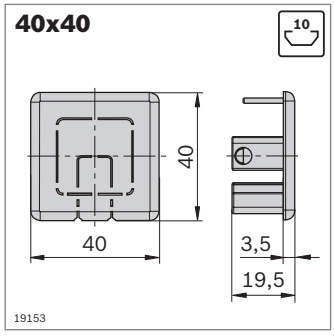

	L (mm)	Color		No.
Cable duct 40x40	2000	Black	1	**3 842 532 363**
Cover cap 40x40		Black	10	**3 842 535 921**

Material: Cable duct: PVC
Cover cap: PA
Scope of delivery: Cover cap incl. fastening screws

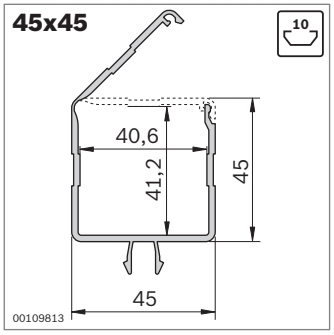

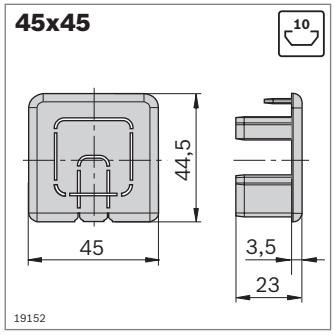

	L (mm)	Color		No.
Cable duct 45x45	2000	Black	1	**3 842 523 014**
Cover cap 45x45		Black	10	**3 842 535 676**

Material: Cable duct: PVC
Cover cap: PA
Scope of delivery: Cover cap incl. fastening screws

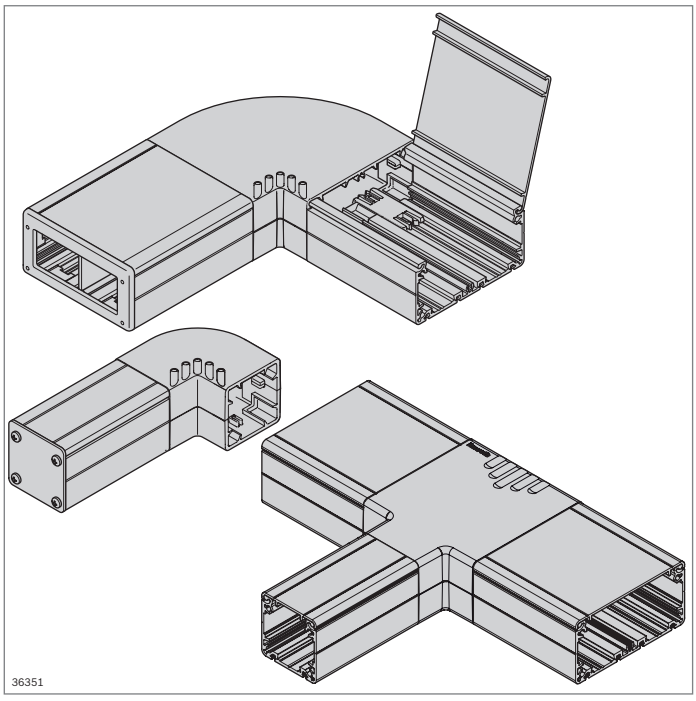

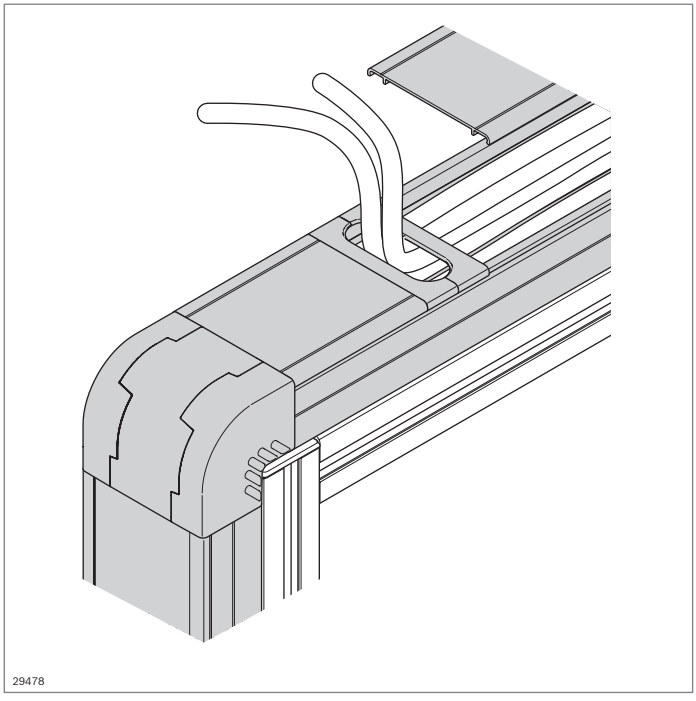

Aluminum cable duct

- Can be either clipped or screwed onto the support profile
- Sizes 40x40, 40x80, 80x40, 80x80
- Drilling aids for easy machining
- Dovetail attachment option
- Suitable for installing on profiles with modular dimensions of 40 and 45 mm
- Interior can be divided for routing different cable types (size 80x40 and 80x80)
- For connection of cable ducts via T-piece (p. 11-8)
- ESD-conductive
- High-quality, attractive external finish thanks to anodized duct surface and cover plate
- Edge protector for protecting the cables/lines from being damaged on rough edges
- PG screw fastenings possible in the side wall and cover plate (mechanical finishing)
- Fitting of sockets, switches etc. possible (mechanical finishing)
- Screw holes for secure fastening of the cover plate
- Cable duct cover can be screwed to the bearing/ support structure
- VDE certified
- Compliant with DIN EN 50085-1 and 50085-2-1 standards

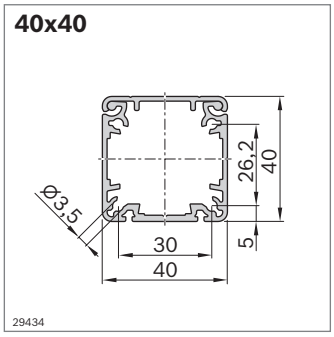

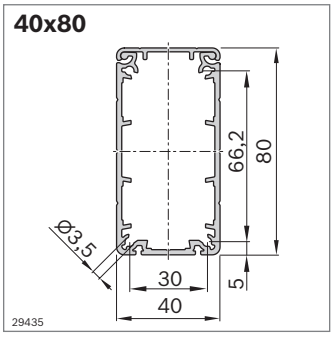

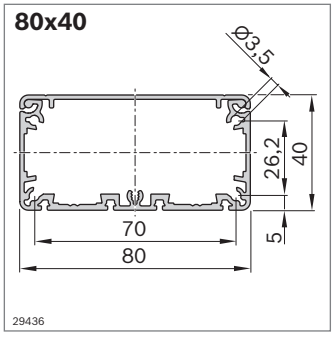

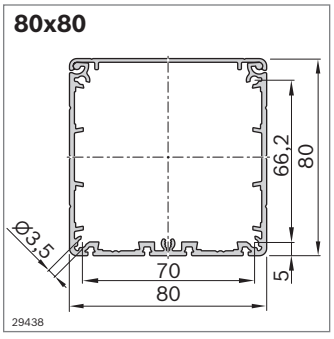

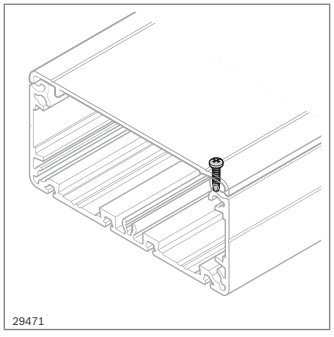

Aluminum cable duct

- Cable duct pre-assembled (cover and bearing/support structure)
- Usable length 3000 mm (delivered in 3100 mm lengths)
- Cover can be secured with a self-tapping screw

Optional accessories: Self-tapping screw **3 842 552 267**

Cable duct with AL cover plate		ESD	L (mm)	No.
1 pc	**40x40**		100 ... 3000	**3 842 996 356/L**
12 pcs	**40x40**		3000	**3 842 552 268**
1 pc	**40x80**		100 ... 3000	**3 842 996 357/L**
12 pcs	**40x80**		3000	**3 842 552 270**
1 pc	**80x40**		100 ... 3000	**3 842 996 358/L**
12 pcs	**80x40**		3000	**3 842 552 273**
1 pc	**80x80**		100 ... 3000	**3 842 996 359/L**
6 pcs	**80x80**		3000	**3 842 552 275**
Material:	Aluminum; anodized			

Self-tapping screw

- For securing the cover plate on the cable duct
- Produces conductive connection between the cover plate and cable duct

Self-tapping screw	ESD		No.
Ze. Pi. 3.5x9.5		10	**3 842 552 267**
Material:	Steel; galvanized		

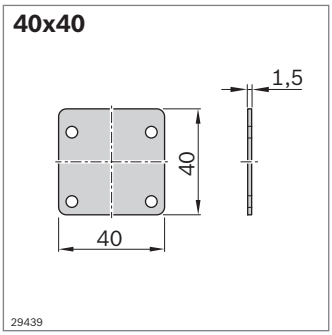

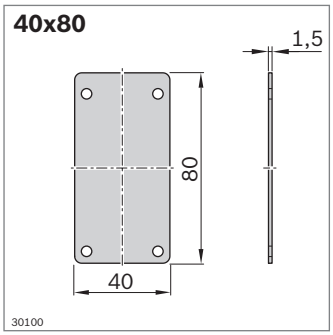

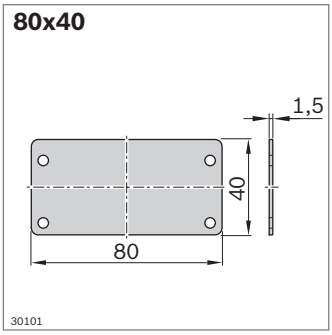

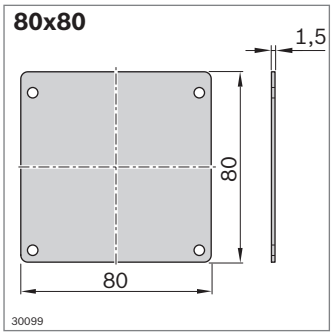

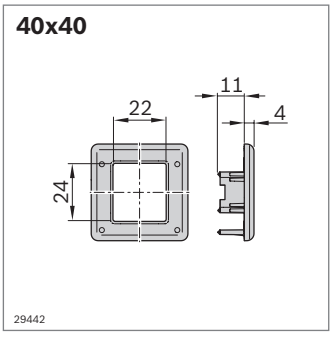

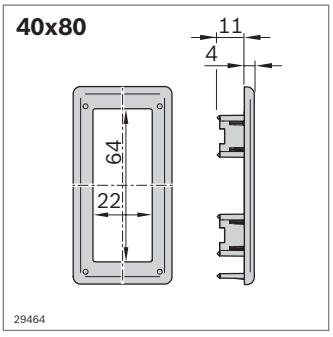

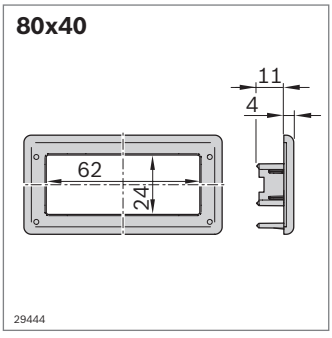

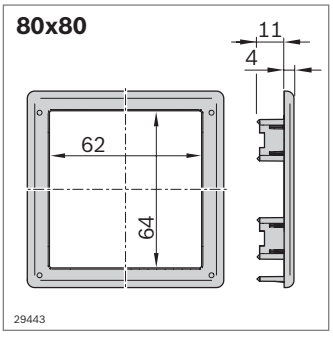

Cover plate

- Seals the end face of the cable duct
- Fastened securely with screws
- Openings for PG screw fastenings can be provided through mechanical finishing

Cover plate	ESD		No.
40x40		10	**3 842 552 249**
40x80		10	**3 842 552 250**
80x40		10	**3 842 552 251**
80x80		10	**3 842 552 252**

Material: Cover plate: Aluminum; anodized
Pressed edges: Aluminum, plain
Screw: Steel; galvanized

Scope of delivery: Cover plate incl. fastening screws

Edge protector

- Used to protect the cables if there is an end face cable outlet
- Can be pushed and also screwed into position
- Can be used to protect the cable at lateral outlets

Edge protector		No.
40x40	10	**3 842 552 253**
40x80	10	**3 842 552 254**
80x40	10	**3 842 552 255**
80x80	10	**3 842 552 256**

Material: PP; signal gray RAL 7004

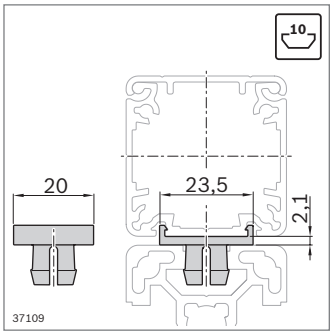

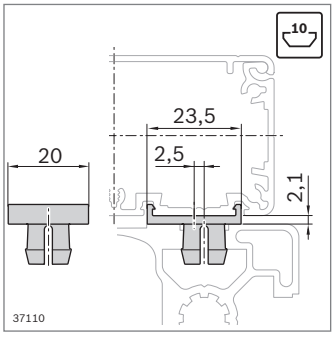

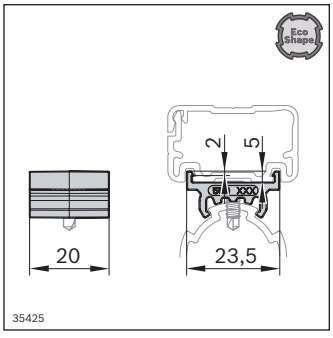

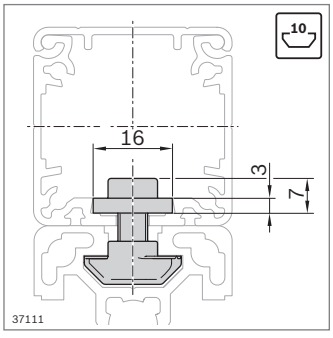

Mounting base

- For machining-free mounting of the cable duct on the support profile
- Insulates the cable duct from the support profile

- "Symmetrical mounting base" design for central mounting of the cable duct on profiles with just one slot on the mounting side, and on multi-slot profiles with 40 mm modular dimension

Mounting base			No.
Symmetrical		10	**3 842 552 247**
Material:	PA; signal gray RAL 7004		

- "Asymmetrical mounting base" design for central installation on profiles with multiple slots on the mounting side and 45 mm modular dimension

Mounting base			No.
Asymmetrical		10	**3 842 552 248**
Material:	PA; signal gray RAL 7004		

- D28L mounting base also compatible with aluminum cable duct (p. 11-4)
- Additional stabilization of D28L mounting bases and establishing an ESD-compliant connection between profile and base can be realized using self-tapping screw (**3 842 552 267**)

Recommended accessories: Self-tapping screw

Mounting base	Color	ESD		No.
D28L	Signal gray		10	**3 842 559 338**
D28L	Black	ESD	10	**3 842 559 337**
Material:	PA			

Mounting kit

- For screwing the cable duct to the support profile
- Secure force transmission without deformation of the mounting surface
- Cable duct has to be drilled (diameter: 6.4 mm)
- Recommendation: Insert every 500 mm

Mounting kit		ESD		No.
10		ESD	10	**3 842 548 997**
Material:	Steel; galvanized			
Scope of delivery:	Insert sheet; T-nut M6, 10 mm slot; screw M6x16			

HOR40x40
VER40x40

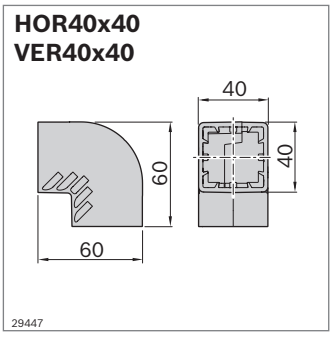

HOR40x80
VER80x40

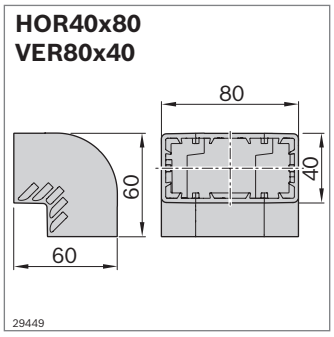

HOR80x40
VER40x80

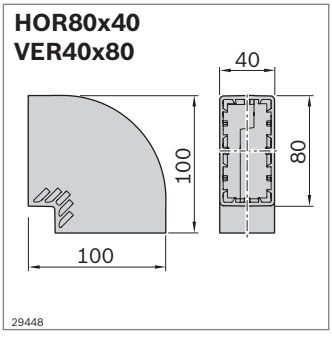

HOR80x80
VER80x80

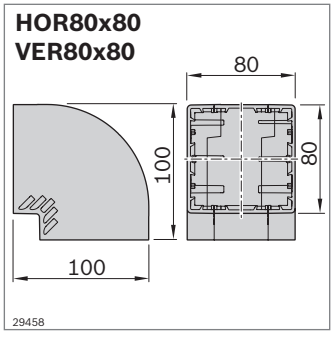

H40

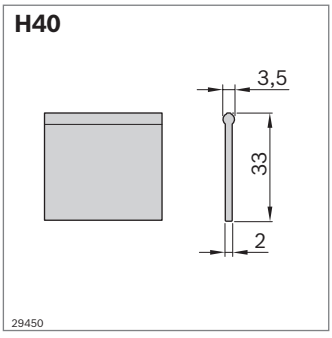

H80

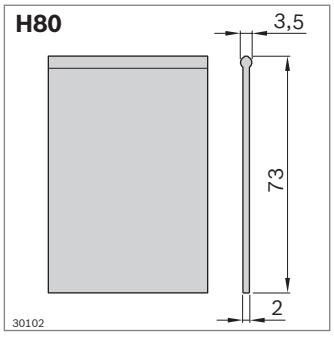

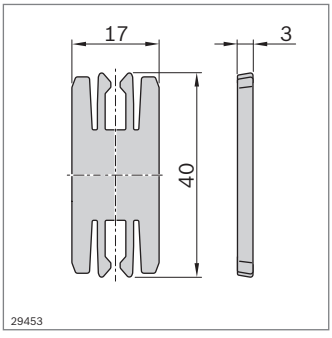

Curve

- 90° curve in horizontal and vertical direction
- Modular design
- Cable ducts connected together with push-in connection elements
- Cable ducts can be made conductive by using supplied potential equalizer line

Curve	ESD*)		No.
HOR40x40; VER40x40		1	**3 842 552 257**
HOR40x80; VER80x40		1	**3 842 552 258**
HOR80x40; VER40x80		1	**3 842 552 259**
HOR80x80; VER80x80		1	**3 842 552 260**

Material: PP; signal gray RAL 7004

Scope of delivery: Curve, connection elements, potential equalizer line

*) ESD: Plastic has no conductivity. Using a potential equalizer, 2 cable ducts can be connected in a conductive way (s. p. 11-9).

Dividing strip

- Divides the cable duct into 2 chambers for carrying different electric cables, e.g. electricity and data cables
- Push-in installation
- Bendable, so it can also be used on curves

Dividing strip		No.
H40 L=3000 mm	10	**3 842 552 245**
H80 L=3000 mm	10	**3 842 552 246**

Material: PVC; signal gray RAL 7004

Connection element

- Extension of ends of cable ducts
- For connecting cable duct with curve
- ESD conductivity of both cable ducts can be established by using an overlapping cover and self-tapping screw (p. 11-4)

Connection element		No.
	10	**3 842 552 240**

Material: PA; signal gray RAL 7004

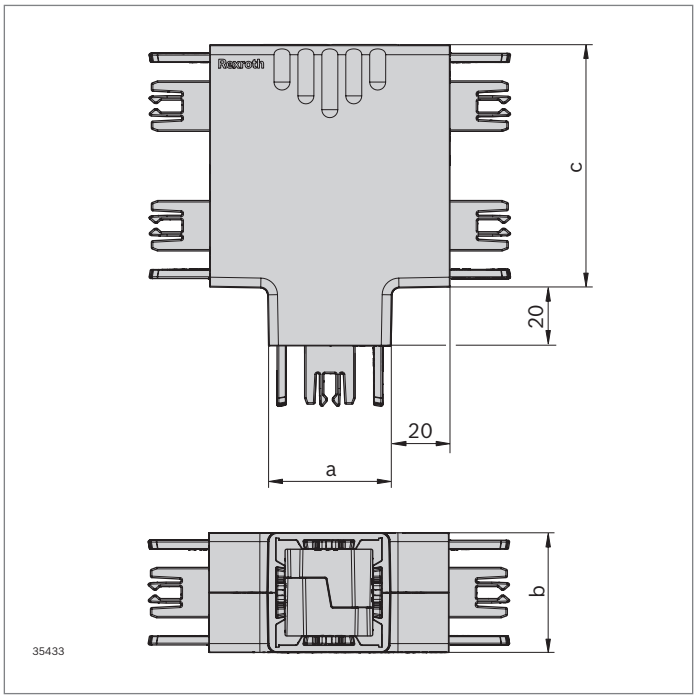

T-piece cable duct

- Modular design
- Cable ducts connected together with push-in connection elements
- Cable ducts can be made conductive by using supplied potential equalizer line
- VDE certified

T-piece Cable duct	a (mm)	b (mm)	c (mm)	ESD*)	No.
40x40x40	40	40	40		**3 842 558 644**
40x40x80	40	40	80		**3 842 558 646**
40x80x40	40	80	40		**3 842 558 648**
40x80x80	40	80	80		**3 842 558 650**
80x40x40	80	40	40		**3 842 558 651**
80x40x80	80	40	80		**3 842 558 652**
80x80x40	80	80	40		**3 842 558 653**
80x80x80	80	80	80		**3 842 558 654**

Material:	PP; signal gray RAL 7004
Scope of delivery:	T-piece, connection elements, potential equalizer line
ESD*:	Plastic has no conductivity. Using a potential equalizer, cable ducts can be connected in a conductive way

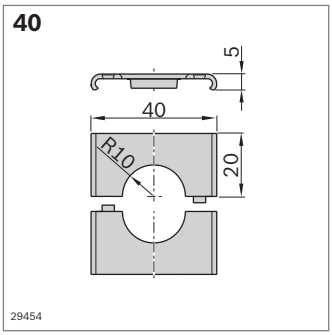

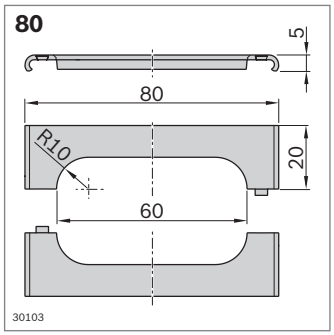

Cable hole

- For passing cables through within the cover

Cable hole		No.
40	10	**3 842 553 973**
80	10	**3 842 553 974**
Material:	PP; signal gray RAL 7004	

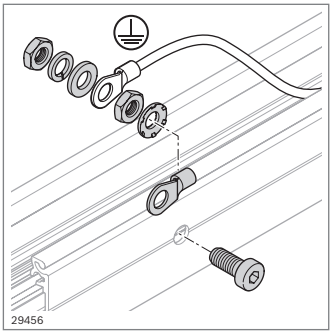

Potential equalizer

- DIN VDE 0100-410 compliant
- For connecting the cable duct to an earthed protective conductor

Potential equalizer		No.
10	10	**3 842 552 263**
Material:	Steel; galvanized	
Scope of delivery:	Grounding wire not available	

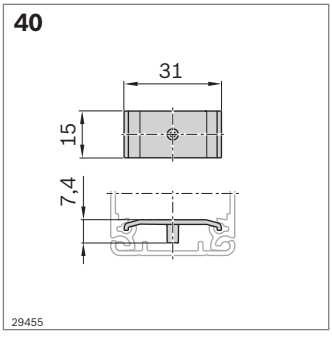

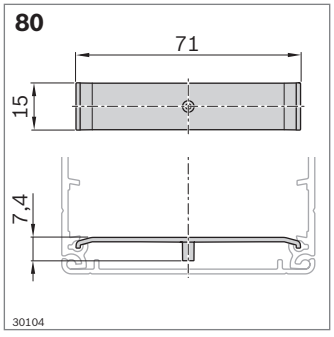

Cable holder

- For fixing the cable in the cable duct in the case of overhead mounting
- Recommendation: Insert every 200 mm

Cable holder		No.
40	10	**3 842 552 265**
80	10	**3 842 552 266**
Material:	PA6; signal gray RAL 7004	

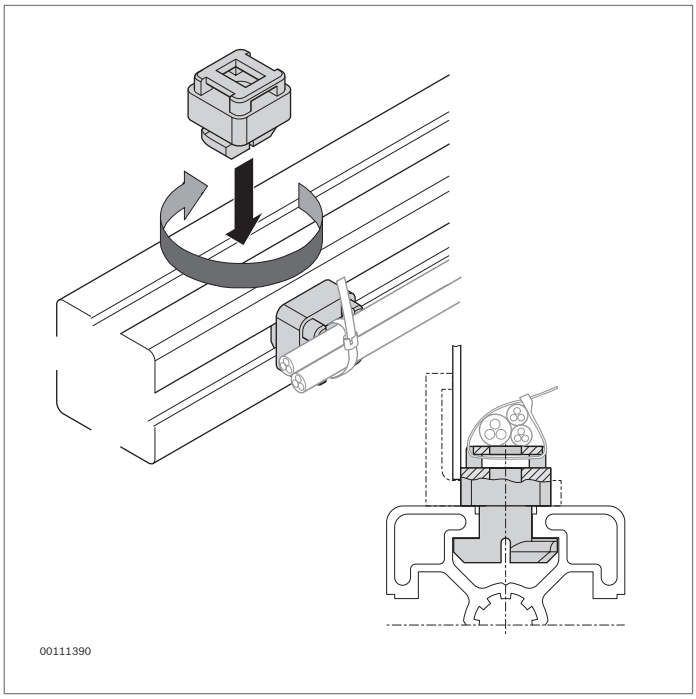

Cable bracket



- Cable bracket for fastening individual cables with cable ties
- For use behind panels or screens
- Dimensioned to match the Variofix block for slot 10 mm

Required accessories:
Cable ties

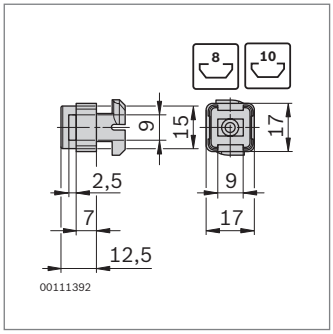

Cable bracket	Slot		No.
	8	100	**3 842 555 182**
	10	100	**3 842 555 180**

Material: PA; signal gray RAL 7004

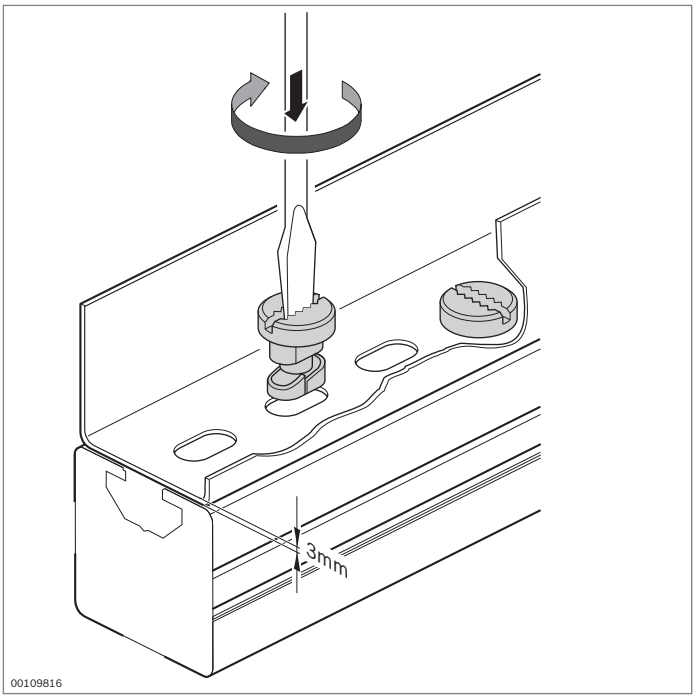

Quick-lock

10

- Quick-lock for fastening standard commercially available cable ducts

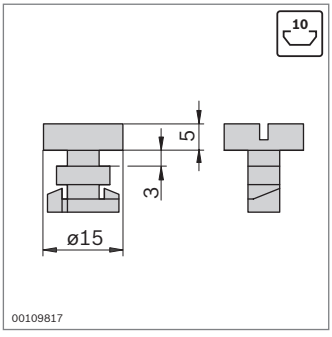

Quick-lock			No.
		100	**3 842 146 920**
Material:	PA; black		

Elements for manual movement



Slide hangers, snap hooks (p. 12-2)



Sliders for panel element (p. 12-3)

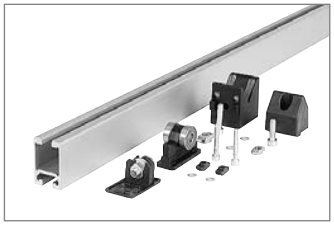

Components for sliding door (p. 12-4)

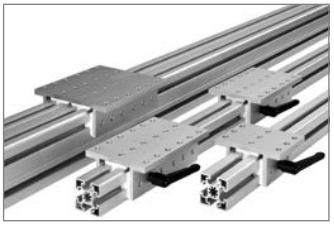

EcoSlide (p. 12-6)

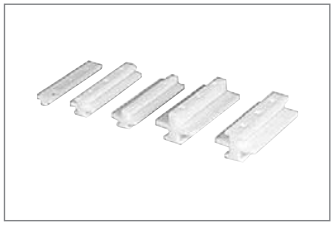

Sliders for profiles (p. 12-13)



Support wheels (p. 12-17)

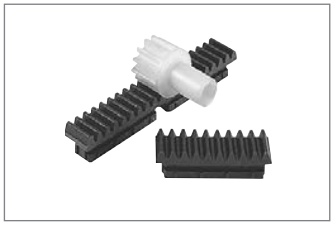

Rack, pinion (p. 12-18)



Conveyor track Lean (p. 12-19)

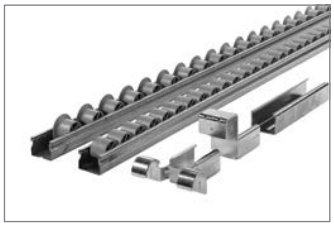

Conveyor track XLean (p. 12-24)



Conveyor track EcoFlow (p. 12-27)



Profiles for installing conveyor media (p. 12-33)

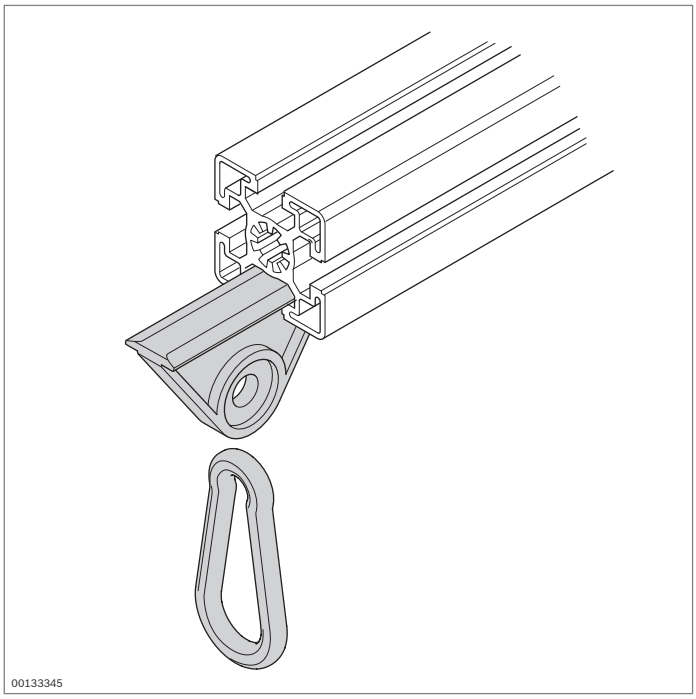

Slide hanger
Snap hook

10

Slide hanger

- Slide hanger as an inexpensive solution for sliding tool hangers
- Maximum load: 150 N
- Guide in the 10 mm profile slot
- Sliding block can be used as a stopper

Accessories: Sliding block as a stopper (see p. 3-7)

Snap hook

- Snap hook for fastening tools to the slide hanger:
  - Quick and easy to change

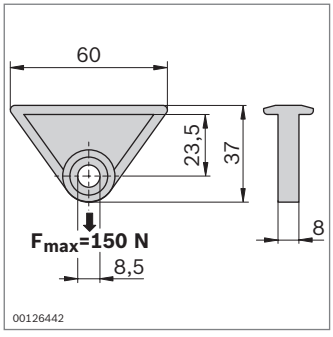

Slide hanger		No.
		3 842 218 953
Material:	POM; natural	

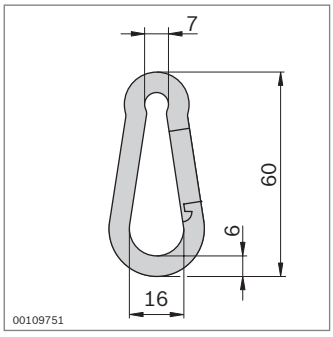

Snap hook		No.
		0 842 901 309
Material:	Steel; galvanized	

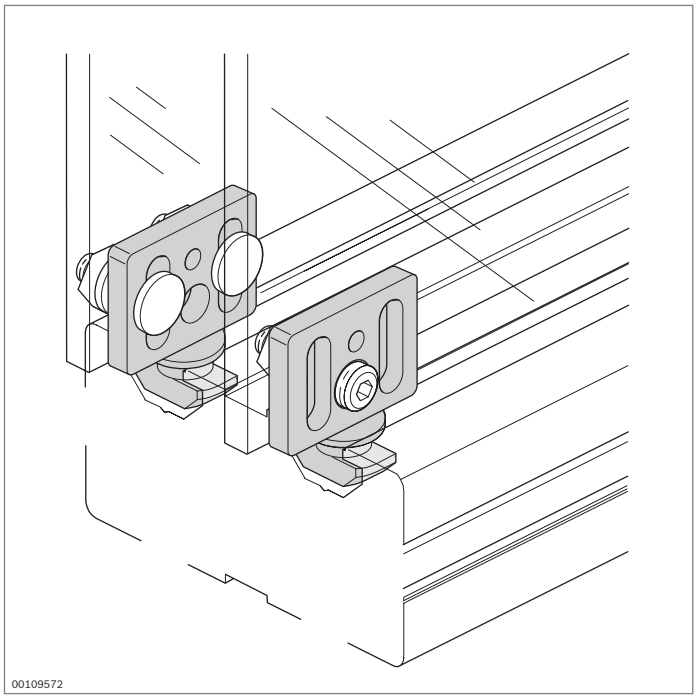

Slider for panel elements



- For the construction of sliding and lifting doors
- Good functional reliability
- For any thickness of the panel element or aluminum profile frame

Required accessories:
Screws and nuts/sliding blocks for fastening the panel elements

Optional accessories:
Counterbalance in the case of lifting doors (p. 9-2)

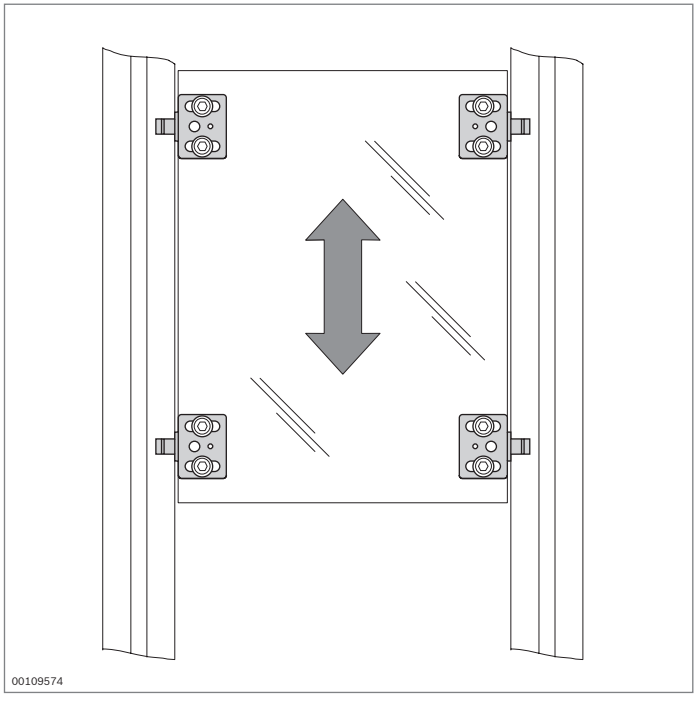

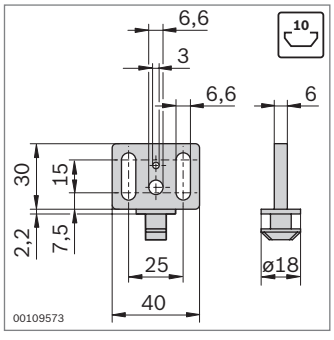

Slider		No.
	10	**3 842 555 226**
Material:	POM; signal gray RAL 7004	

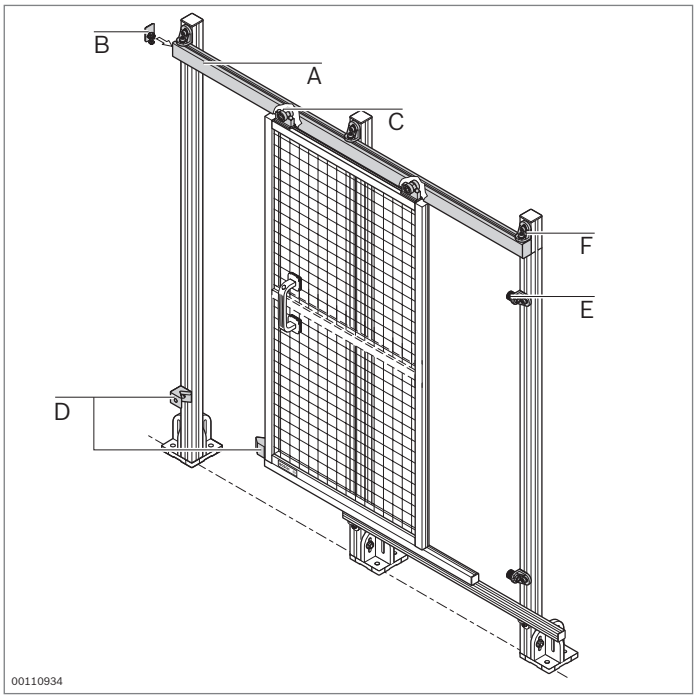

Components for sliding door

10

- Components for constructing sliding doors of different dimensions

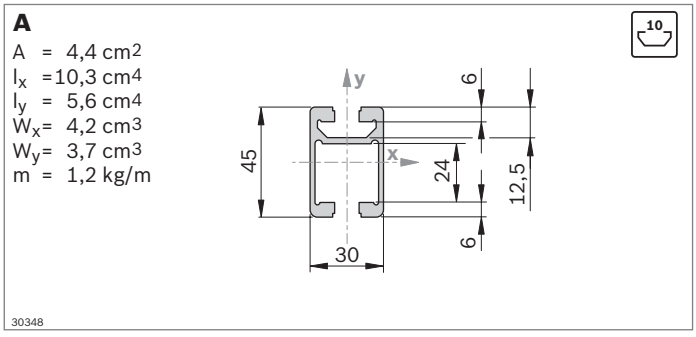

- Profile rail and trolley for movable mounting of parts, e.g. for use as a screwdriver hanger at work tables or for EcoSafe sliding doors (p. 10-14)

Profile rail 30x45C		L (mm)	No.
1 pc		50 ... 6070	**3 842 992 946 / L**
20 pcs		6070	**3 842 557 950**

Material: Aluminum; anodized

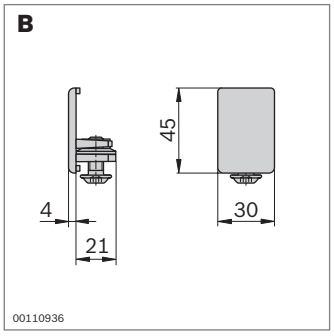

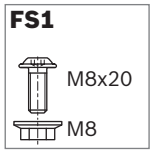

- Profile rail end piece for use for trolley as a cover cap with stop
- With screw protection

End piece 30x45C	Color	ESD		No.	FS
	Signal gray		20	**3 842 554 710**	FS1
	Black		20	**3 842 554 711**	FS1

Material: End piece: PA
Fastening material: Steel; galvanized

Scope of delivery: Incl. fastening material (FS)

C

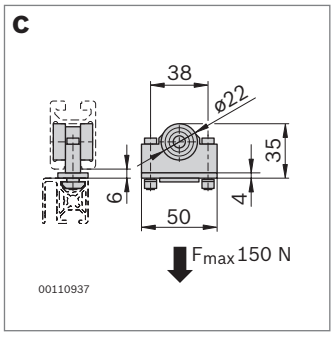

FS2

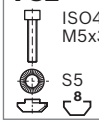

- Trolley with dust-proof ball bearings for smooth sliding motion
- For fastening profiles with a 8 mm slot

Trolley	No.	FS
	3 842 524 153	2xFS2

Material:	PA; black / steel, galvanized Fastening material: Steel; galvanized
Scope of delivery:	Incl. fastening material (FS)

D

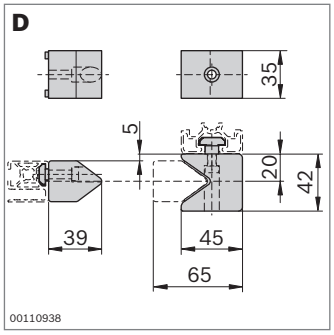

FS3



FS4

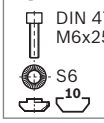

- Stop kit for damped closing of the sliding door

Stop kit	No.	FS
	3 842 524 490	FS3, FS4

Material:	PA; black Fastening material: Steel; galvanized
Scope of delivery:	Incl. fastening material (FS)

E

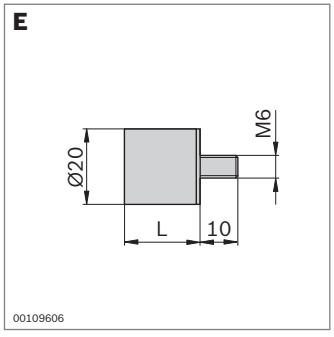

- Bumper for a damped stop

Bumper		No.
	10	**3 842 510 462**

Material:	Rubber; hardness 55° shore A
Accessories:	Bracket set R28x38 for fastening to strut profiles with 10 mm slot

F

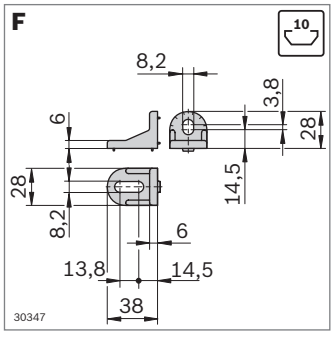

FS5



FS6

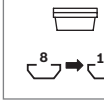

- Bracket for fastening the profile rail to strut profiles with 10 mm slot

Bracket	Slot	ESD	No.	FS
R28x38 Set (standard)	10 / 10		**3 842 521 580**	2xFS5, 4xFS6

Material:	Diecast zinc Fastening material: Steel; galvanized
Scope of delivery:	Incl. fastening material (FS)

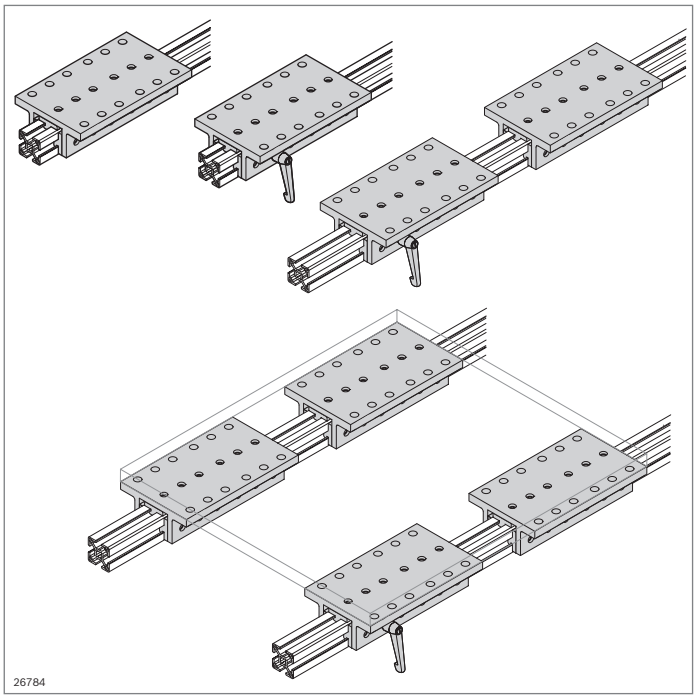

EcoSlide



- Economical linear sliding carriage for horizontal applications
- Runs on sliders for maximal load capacity
- Slider with low moisture absorption, suitable for rough application conditions
- Available for profile widths of 30/45/60/90
- Clamping lever (optional) for arresting in any position
- Easy to assemble
- Spacer washer for tolerance adjustment (carriage/profile)

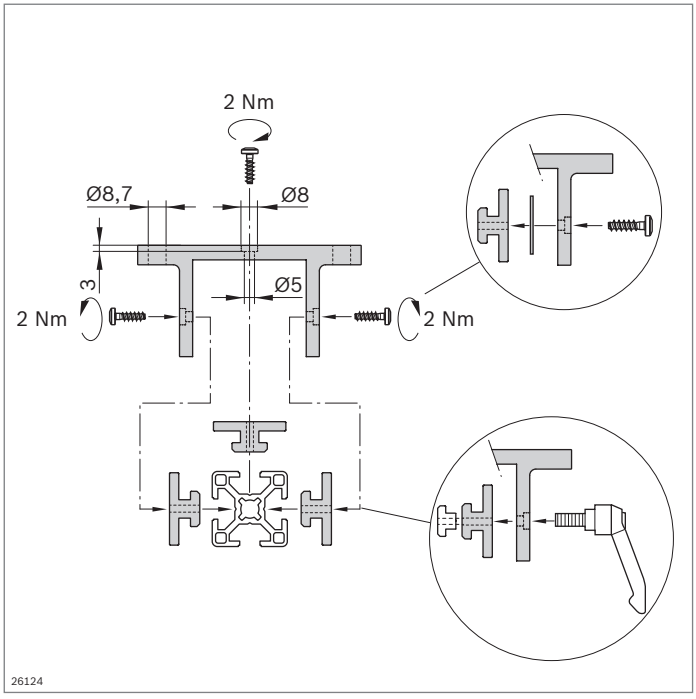

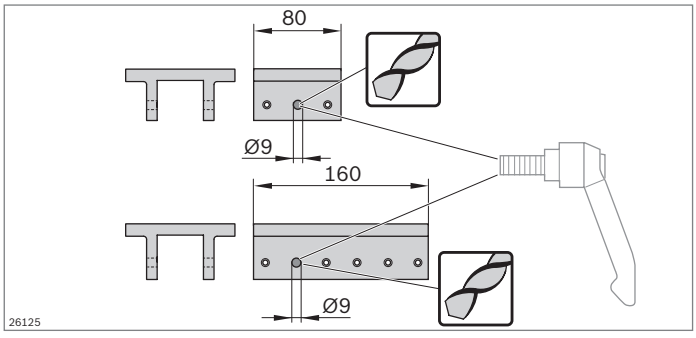

Machining tip

To install the clamping lever, the corresponding 9 mm hole must be drilled in the trolley.

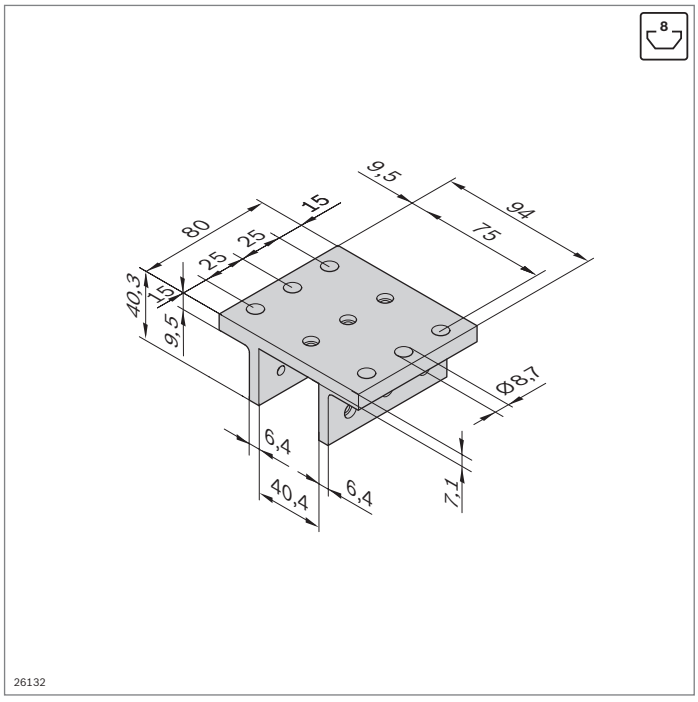

Fmax	Fmax	Mmax	Mmax
750 N	325 N	10 Nm	150 Nm

EcoSlide 30x30x80

- For use with profile width 30 mm
- Maximum sliding speed: 12 m/min

Trolley 30x30x80		No.
	1	**8 981 535 476**
Material:	Aluminum; anodized	

Accessories

		No.	Pcs	Pcs	Page
Slider, slot 8 mm flat	10	**3 842 523 212**	3	2	12-13
Slider, groove 8 mm flat lockable	1	**3 842 552 423**	–	1	12-11
Spacer washer Slot 8 mm	4	**8 981 535 891**	X[1)]	X[1)]	12-11
Screw W1451 - 3.5x14 - 10.9	10	**3 842 552 421**	9	8	12-12
Clamping lever, 20 mm	1	**3 842 516 846**	–	1	4-13
Sliding block Slot 8 mm; M8	100	**3 842 514 931**	–	1	3-7

[1)] If required

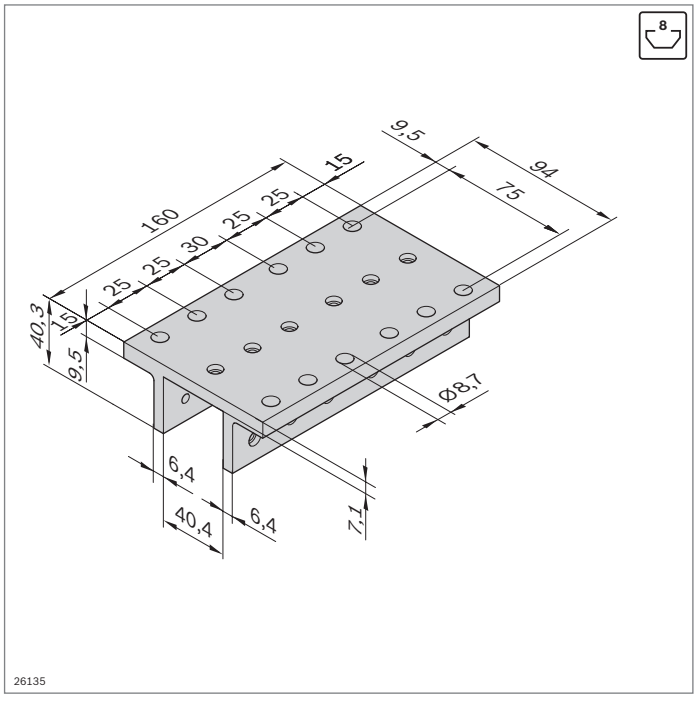

Fmax	Fmax	Mmax	Mmax
1500 N	750 N	20 Nm	200 Nm

EcoSlide 30x30x160

- For use with profile width 30 mm
- Maximum sliding speed: 12 m/min

Trolley 30x30x160		No.
	1	**8 981 535 477**
Material:	Aluminum; anodized	

Accessories

		No.	Pcs	Pcs	Page
Slider, slot 8 mm flat	10	**3 842 523 212**	6	5	12-13
Slider, slot 8 mm flat lockable	1	**3 842 552 423**	–	1	12-11
Spacer washer Slot 8 mm	4	**8 981 535 891**	X[1)]	X[1)]	12-11
Screw W1451 - 3.5x14 - 10.9	10	**3 842 552 421**	18	17	12-12
Clamping lever, 20 mm	1	**3 842 516 846**	–	1	4-13
Sliding block Slot 8 mm; M8	100	**3 842 514 931**	–	1	3-7

[1)] If required

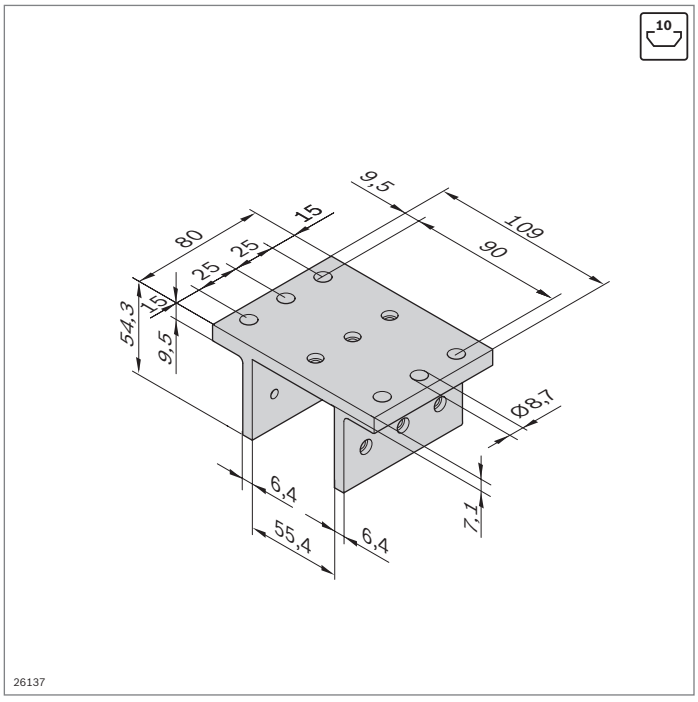

Fmax	Fmax	Mmax	Mmax
1250 N	625 N	40 Nm	150 Nm

EcoSlide 45x45x80

- For use with profile width 45 mm
- Maximum sliding speed: 12 m/min

Trolley 45x45x80		No.
	1	**8 981 535 323**
Material:	Aluminum; anodized	

Accessories

		No.	Pcs	Pcs	Page
Slider, slot 10 mm flat	10	**3 842 530 329**	3	2	12-13
Slider, slot 10 mm flat lockable	1	**3 842 552 424**	–	1	12-11
Spacer washer Slot 10 mm	4	**8 981 535 890**	X[1)]	X[1)]	12-12
Screw W1452 - 4x18 - 10.9	10	**3 842 552 422**	9	8	12-12
Clamping lever, 20 mm	1	**3 842 516 846**	–	1	4-13
Sliding block Slot 10 mm, M8	100	**3 842 528 735**	–	1	3-7

[1)] If required

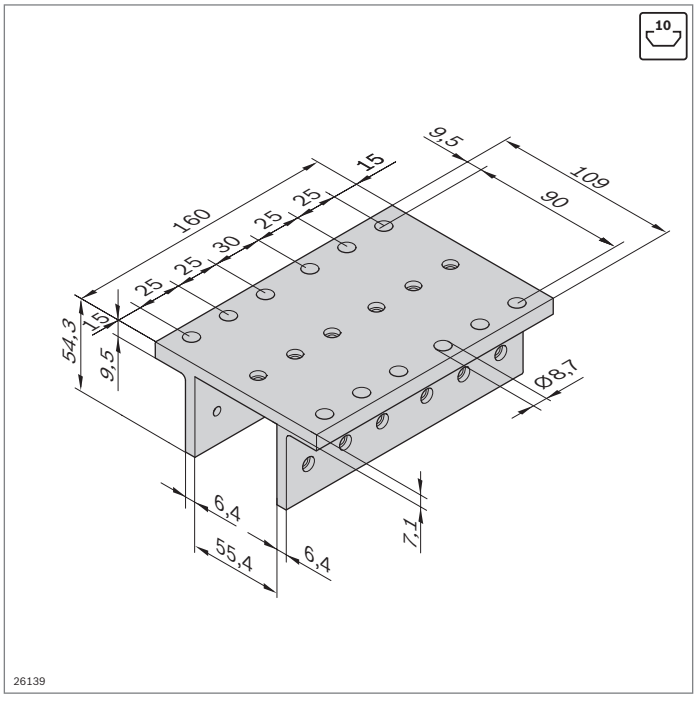

Fmax	Fmax	Mmax	Mmax
2500 N	1250 N	80 Nm	200 Nm

EcoSlide 45x45x160

- For use with profile width 45 mm
- Maximum sliding speed: 12 m/min

Trolley 45x45x160		No.
	1	**8 981 535 324**
Material:	Aluminum; anodized	

Accessories

		No.	Pcs	Pcs	Page
Slider, slot 10 mm flat	10	**3 842 530 329**	6	5	12-13
Slider, slot 10 mm flat lockable	1	**3 842 552 424**	–	1	12-11
Spacer washer Slot 10 mm	4	**8 981 535 890**	X[1)]	X[1)]	12-12
Screw W1452 - 4x18 - 10.9	10	**3 842 552 422**	18	17	12-12
Clamping lever, 20 mm	1	**3 842 516 846**	–	1	4-13
Sliding block Slot 10 mm, M8	100	**3 842 528 735**	–	1	3-7

[1)] If required

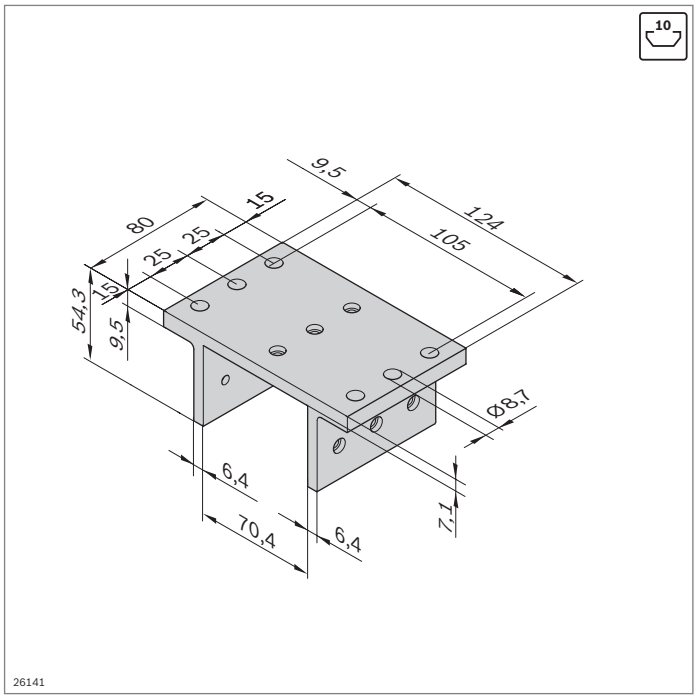

Fmax	Fmax	Mmax	Mmax
1250 N	625 N	40 Nm	150 Nm

EcoSlide 45x60x80

- For use with profile width 60 mm
- Maximum sliding speed: 12 m/min

Trolley 45x60x80		No.
	1	**8 981 535 478**
Material:	Aluminum; anodized	

Accessories

		No.	Pcs	Pcs	Page
Slider, slot 10 mm flat	10	**3 842 530 329**	3	2	12-13
Slider, slot 10 mm flat lockable	1	**3 842 552 424**	–	1	12-11
Spacer washer Slot 10 mm	4	**8 981 535 890**	X[1)]	X[1)]	12-12
Screw W1452 - 4x18 - 10.9	10	**3 842 552 422**	9	8	12-12
Clamping lever, 20 mm	1	**3 842 516 846**	–	1	4-13
Sliding block Slot 10 mm, M8	100	**3 842 528 735**	–	1	3-7

[1)] If required

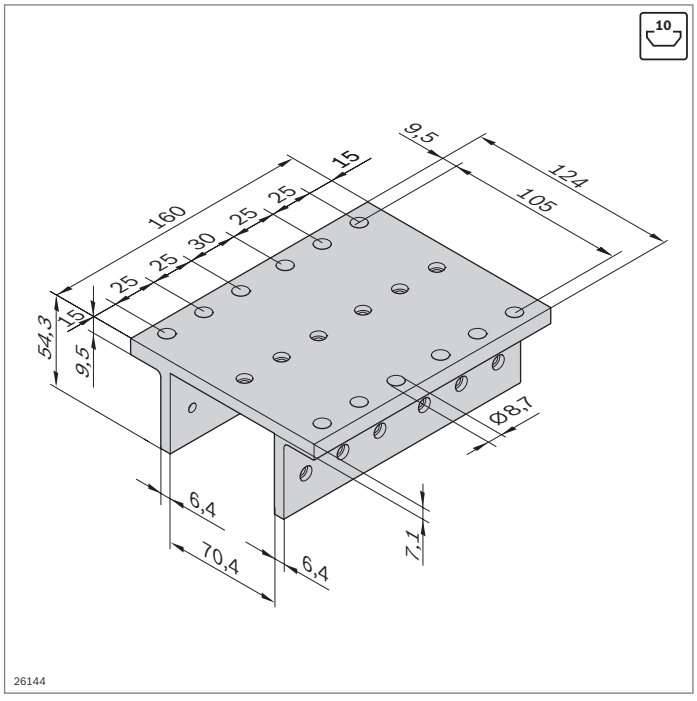

Fmax	Fmax	Mmax	Mmax
2500 N	1250 N	80 Nm	200 Nm

EcoSlide 45x60x160

- For use with profile width 60 mm
- Maximum sliding speed: 12 m/min

Trolley 45x60x160		No.
	1	**8 981 535 479**
Material:	Aluminum; anodized	

Accessories

		No.	Pcs	Pcs	Page
Slider, slot 10 mm flat	10	**3 842 530 329**	6	5	12-13
Slider, slot 10 mm flat lockable	1	**3 842 552 424**	–	1	12-11
Spacer washer Slot 10 mm	4	**8 981 535 890**	X[1)]	X[1)]	12-12
Screw W1452 - 4x18 - 10.9	10	**3 842 552 422**	18	17	12-12
Clamping lever, 20 mm	1	**3 842 516 846**	–	1	4-13
Sliding block Slot 10 mm, M8	100	**3 842 528 735**	–	1	3-7

[1)] If required

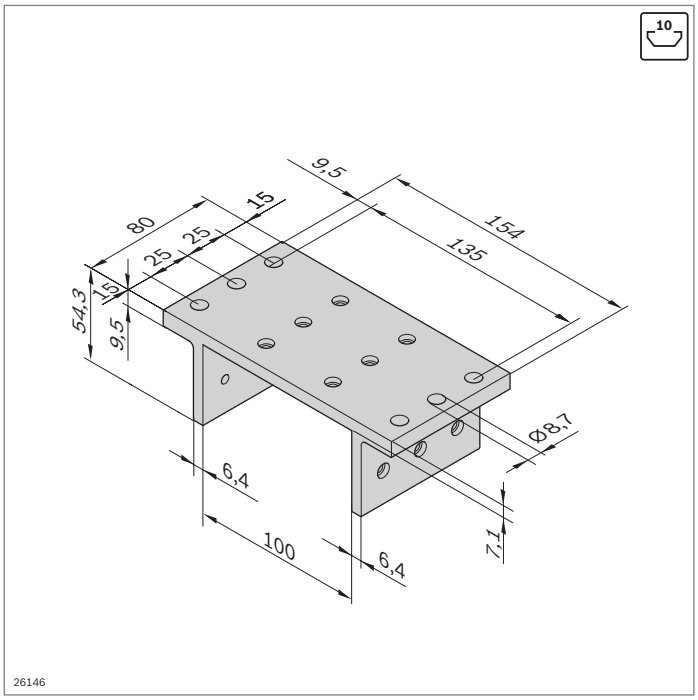

Fmax	Fmax	Mmax	Mmax
2500 N	1250 N	50 Nm	150 Nm

EcoSlide 45x90x80

- For use with profile width 90 mm
- Maximum sliding speed: 12 m/min

Trolley 45x90x80		No.
	1	**8 981 535 325**
Material:	Aluminum; anodized	

Accessories

		No.			Page
			Pcs	Pcs	
Slider, slot 10 mm flat	10	**3 842 530 329**	4	3	12-13
Slider, slot 10 mm flat lockable	1	**3 842 552 424**	–	1	12-11
Spacer washer Slot 10 mm	4	**8 981 535 890**	X[1)]	X[1)]	12-12
Screw W1452 - 4x18 - 10.9	10	**3 842 552 422**	12	11	12-12
Clamping lever, 20 mm	1	**3 842 516 846**	–	1	4-13
Sliding block Slot 10 mm, M8	100	**3 842 528 735**	–	1	3-7

[1)] If required

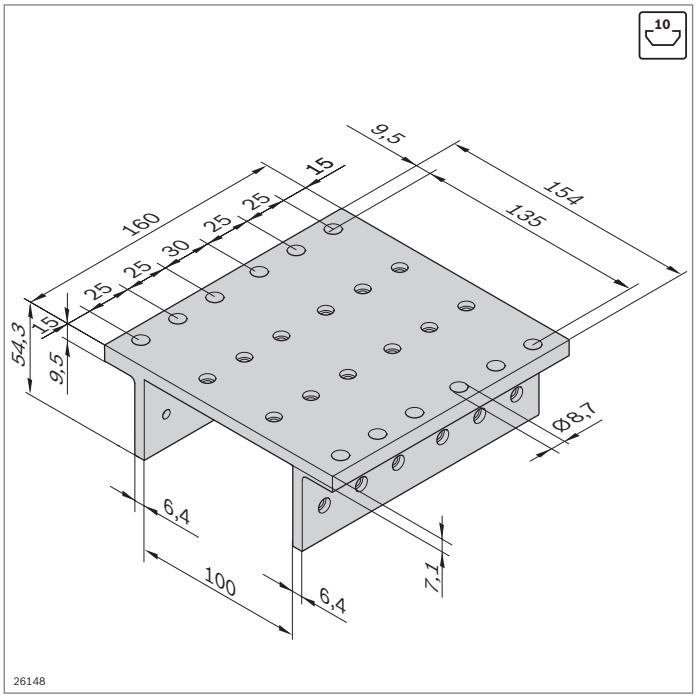

Fmax	Fmax	Mmax	Mmax
5000 N	2500 N	100 Nm	200 Nm

EcoSlide 45x90x160

- For use with profile width 90 mm
- Maximum sliding speed: 12 m/min

Trolley 45x90x160		No.
	1	**8 981 535 326**
Material:	Aluminum; anodized	

Accessories

		No.			Page
			Pcs	Pcs	
Slider, slot 10 mm flat	10	**3 842 530 329**	8	7	12-13
Slider, slot 10 mm flat lockable	1	**3 842 552 424**	–	1	12-11
Spacer washer Slot 10 mm	4	**8 981 535 890**	X[1)]	X[1)]	12-12
Screw W1452 - 4x18 - 10.9	10	**3 842 552 422**	24	23	12-12
Clamping lever, 20 mm	1	**3 842 516 846**	–	1	4-13
Sliding block Slot 10 mm, M8	100	**3 842 528 735**	–	1	3-7

[1)] If required

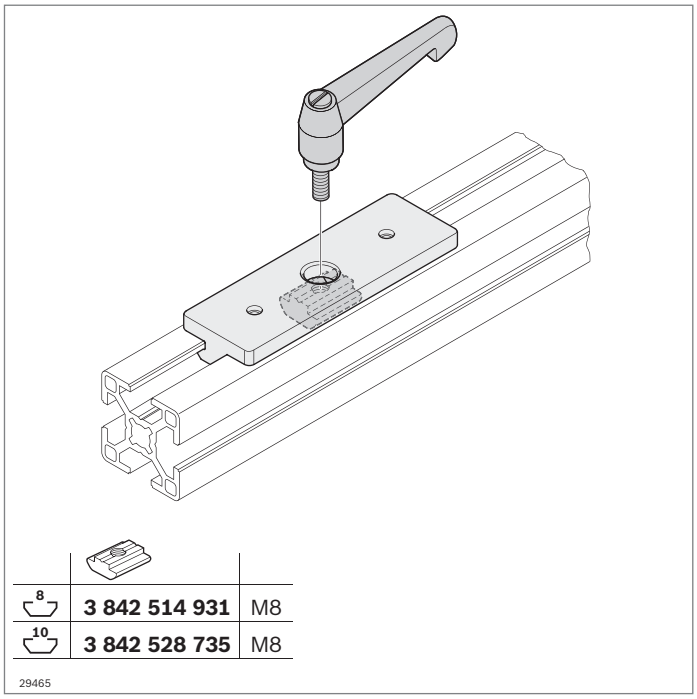

8	**3 842 514 931**	M8
10	**3 842 528 735**	M8

29465

Slider, flat lockable



- Suitable for clamping using a sliding block and a clamping lever
- For constructing low-wear guides

Accessories:
- Sliding blocks (p. 3-7)
- Clamping lever (p. 4-13)

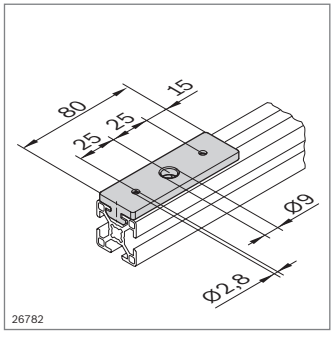

26782

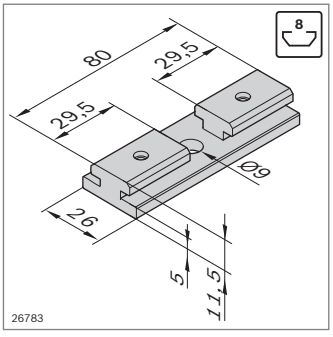

26783

Slider, flat lockable	Slot		No.
	8	1	**3 842 552 423**

Material: POM; natural
Accessories: Sliding block, T-nut, slot 8 (M8), 3 842 514 931, p. 3-7

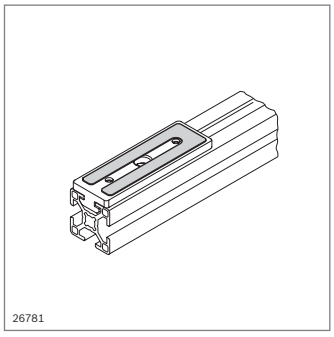

26781

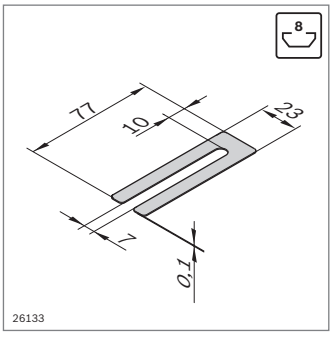

26133

Spacer washer	Slot		No.
77x23	8	4	**8 981 535 891**

Material: Steel; plain

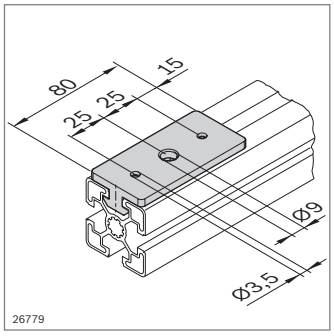

26779

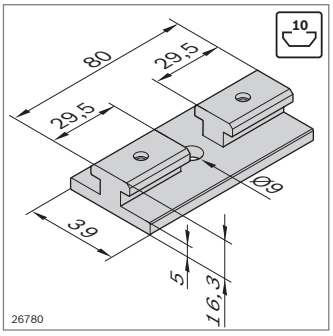

26780

Slider, flat lockable	Slot		No.
	10	1	**3 842 552 424**

Material: POM; natural
Accessories: Sliding block, T-nut, slot 10 (M8), 3 842 528 735, p. 3-7

12

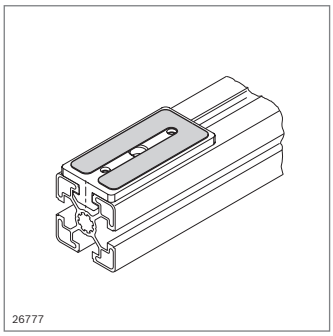

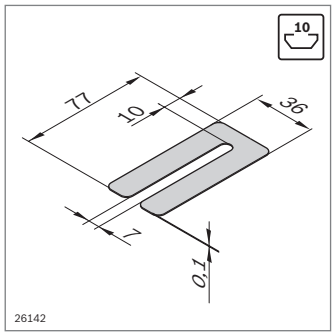

Spacer washer		Slot		No.
77x36		10	4	**8 981 535 890**
Material:	Steel; plain			

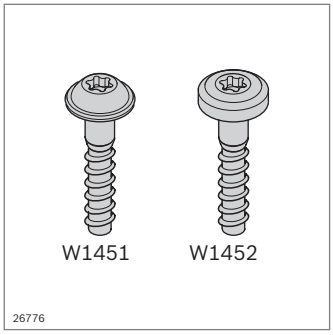

Plastic self-tapping screw	Slot		No.
W1451 - 3.5x14 - 10.9	8	10	**3 842 552 421**
W1452 - 4x18 - 10.9	10	10	**3 842 552 422**
Material: Steel; galvanized			

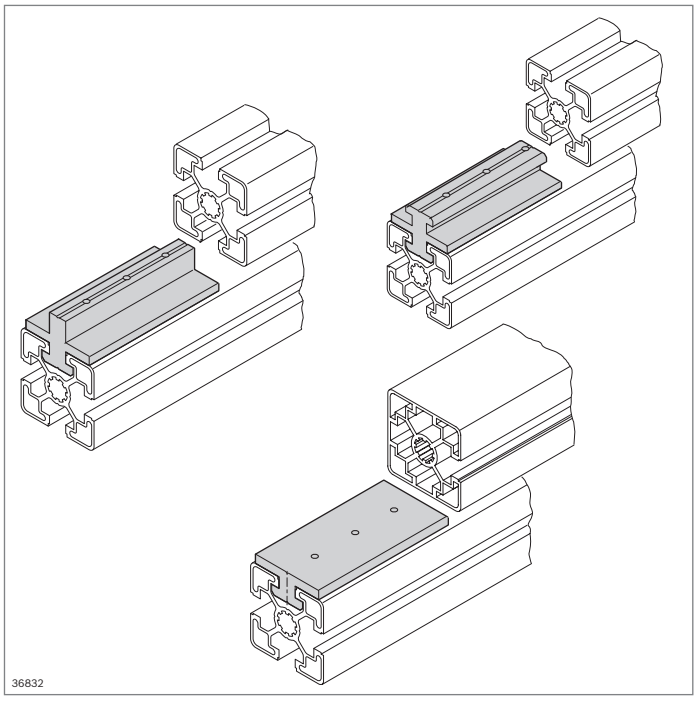

Slider for profiles



Slider

- For the construction of low-wear guides, e.g. for manual sliding and sliding and lifting doors, as well as drawer slides

Optional accessories:
Self-tapping screws for fastening the slider in a profile slot

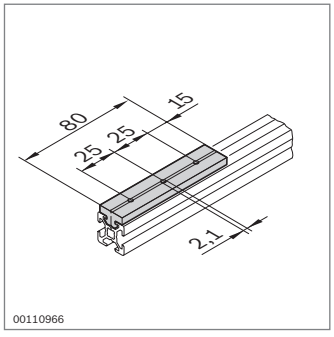

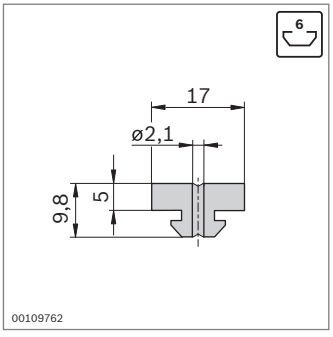

Slider, flat			No.
		10	**3 842 523 213**
Material:	POM; natural		

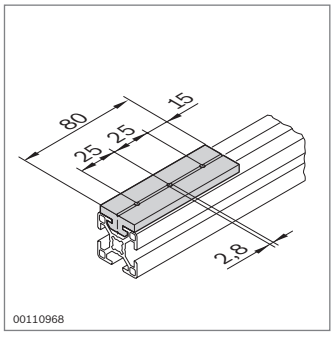

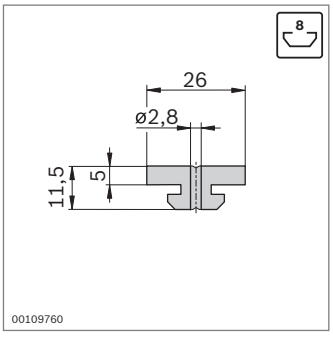

Slider, flat			No.
		10	**3 842 523 212**
Material:	POM; natural		

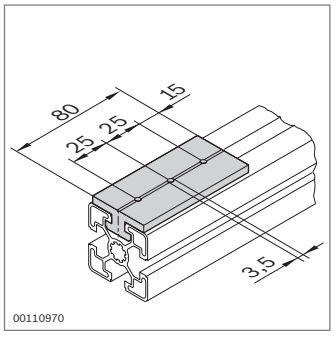

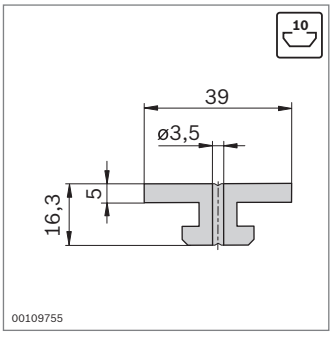

Slider, flat			No.
		10	**3 842 530 329**
Material:	POM; natural		

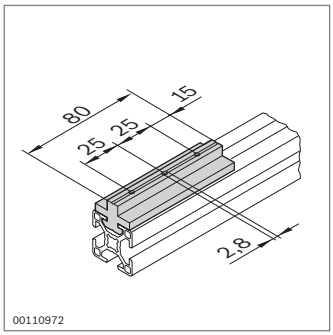

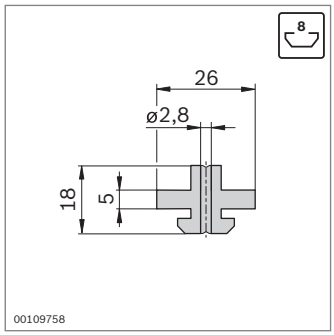

Slider, center			No.
		10	**3 842 523 210**
Material:	POM; natural		

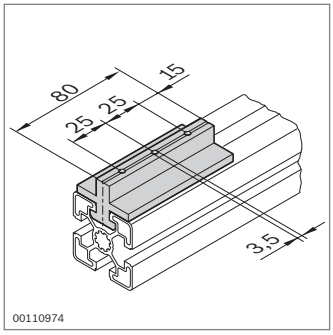

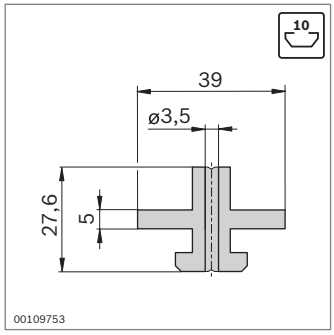

Slider, center			No.
		10	**3 842 523 206**
Material:	POM; natural		

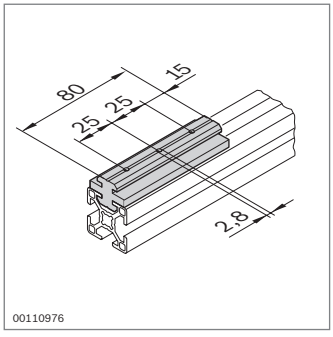

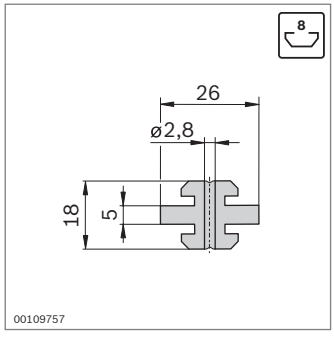

Slider, center			No.
		10	**3 842 523 209**
Material:	POM; natural		

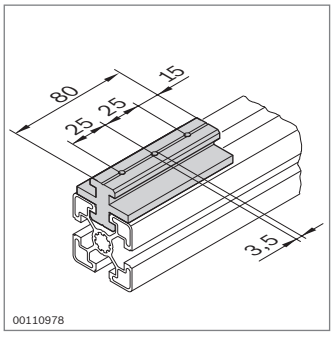

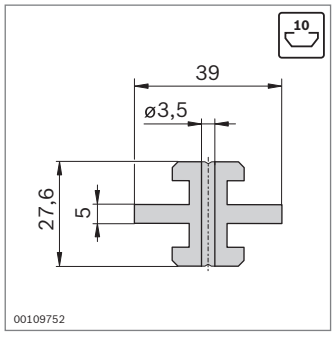

Slider, center			No.
		10	**3 842 523 205**
Material:	POM; natural		

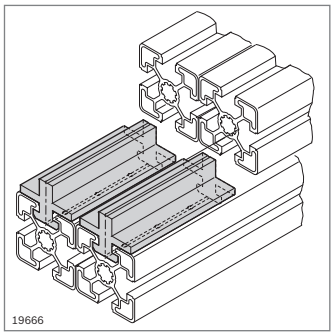

Offset sliders

- For constructing multiple sliding doors

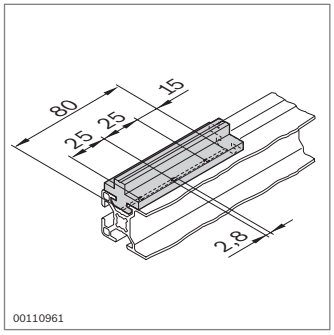

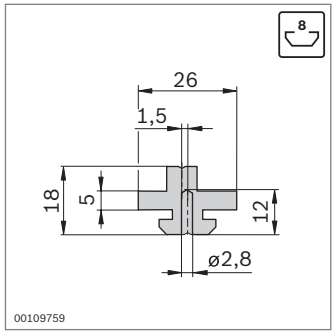

Slider, offset			No.
		10	**3 842 523 211**
Material:	POM; natural		

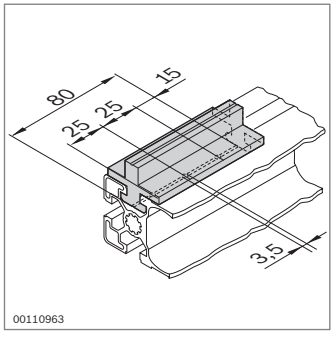

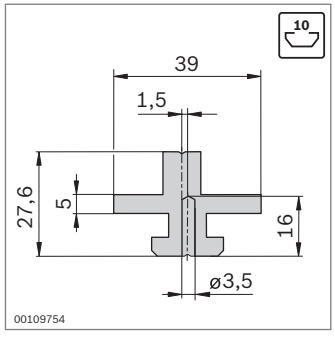

Slider, offset			No.
		10	**3 842 523 207**
Material:	POM; natural		

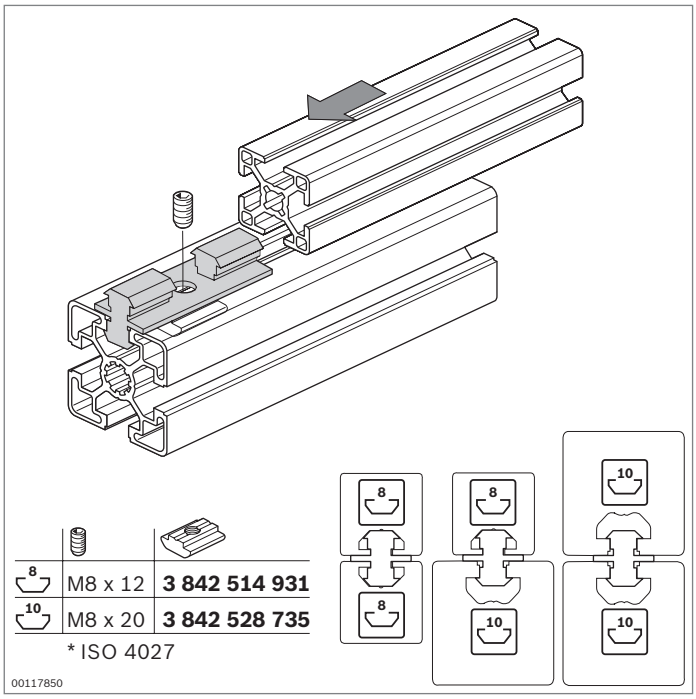

Multi-slider



- Multi-slider for constructing low-wear guides
- Suitable for all profiles with 8 mm and 10 mm slot widths
- Combination of profiles with different slot widths possible

Accessories:
Headless setscrew (ISO 4027) and sliding block (p. 3-7) for fastening the slider in the profile slot

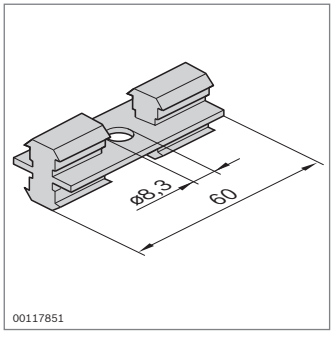

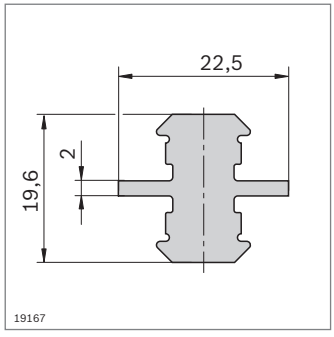

Multi-slider 8/10			No.
		10	**3 842 513 517**
Material:	POM; natural		

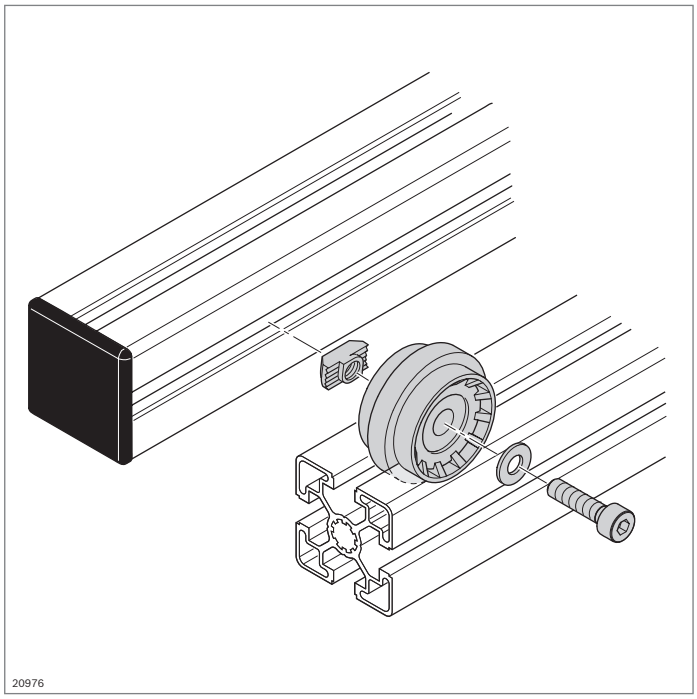

Support wheels

- Support wheel for constructing trolleys or roller sections
- Mounted on profiles with 10 mm slot
- Good running characteristics thanks to deep-groove ball bearing with large diameter
- Support wheel with rim can be guided in 10 mm slot
- ESD-conductive

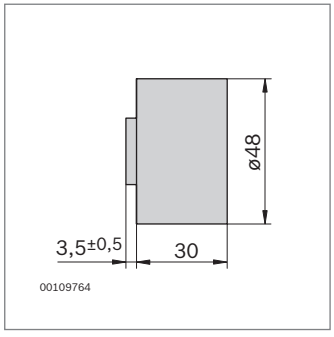

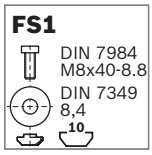

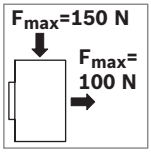

Support wheel	ESD		No.	FS
	ESD	10	**3 842 218 942**	FS1

Material: Vestamid; black
Fastening material: Steel; galvanized
Scope of delivery: Incl. fastening material (FS)

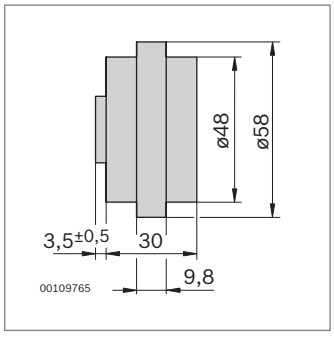

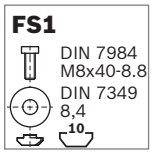

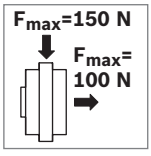

Support wheels with center rim	ESD		No.	FS
	ESD	10	**3 842 218 940**	FS1

Material: Vestamid; black
Fastening material: Steel; galvanized
Scope of delivery: Incl. fastening material (FS)

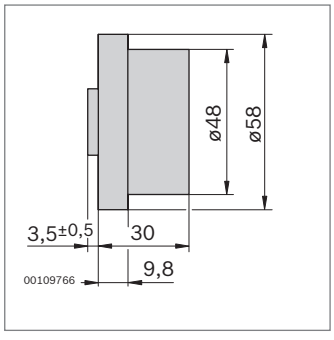

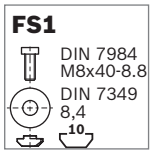

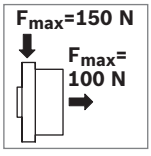

Support wheels with side rim	ESD		No.	FS
	ESD	10	**3 842 218 941**	FS1

Material: Vestamid; black
Fastening material: Steel; galvanized
Scope of delivery: Incl. fastening material (FS)

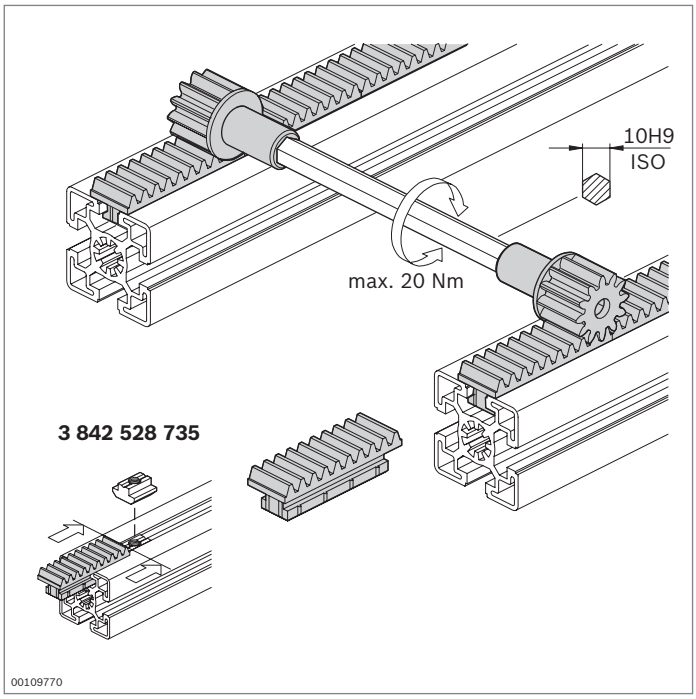

Rack
Pinion

10

- For constructing synchronous shafts to prevent tilting in the case of large guide widths

Required accessories:

- Standard commercially available hexagonal shaft 10H9
- Sliding block for fixing the rack in the slot (p. 3-7)

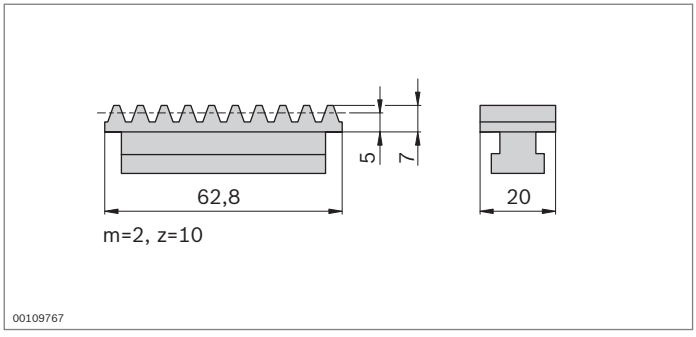

Rack			No.
		10	**3 842 501 578**
Material:	PA; black		

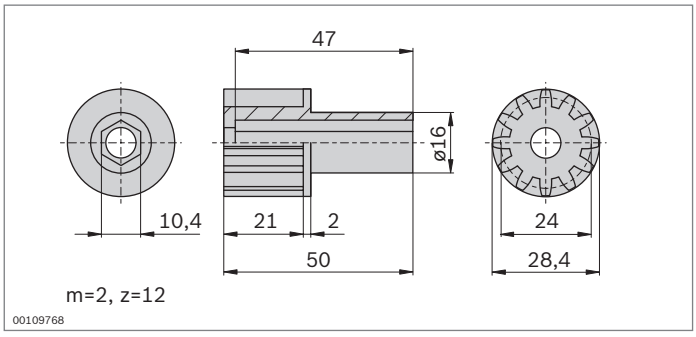

Pinion		No.
		3 842 501 576
Material:	POM, white	

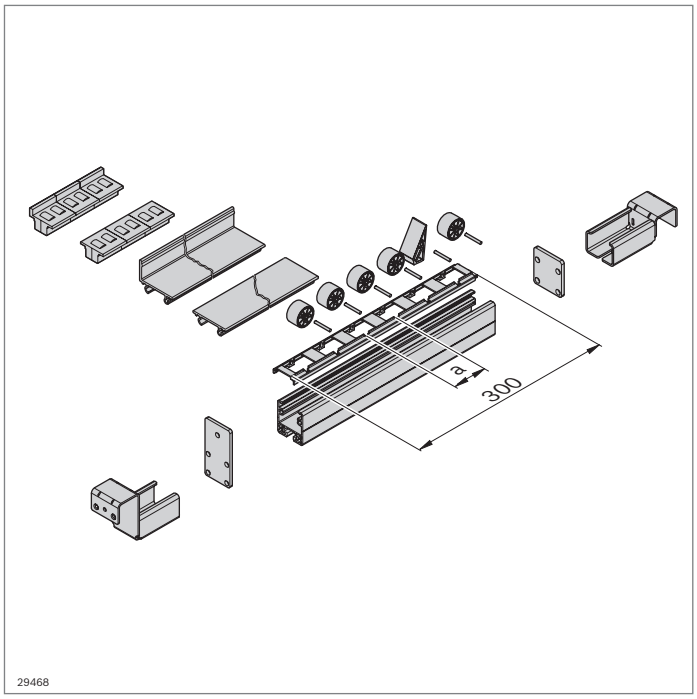

Elements for the construction of conveyor track Lean

- Components for constructing manual conveyor sections
- Based on multi-functional U-profile
- Clip-in conveyor elements for all requirements:
  - Rollers with or without flange; four colors to visually identify inventories (kanban) or to differentiate between good/reject parts
  - Slide rails with or without integrated lateral guide (GSSK, GS)
  - Roller elements with and without roller flange (RE45SK, RE45)

Accessories:
Round tube D28 (p. 2-70)

U-profile

A = 4,4 cm²
I_x = 10,4 cm⁴
I_y = 8,3 cm⁴
W_x = 4,6 cm³
W_y = 4,1 cm³
m = 1,2 kg/m

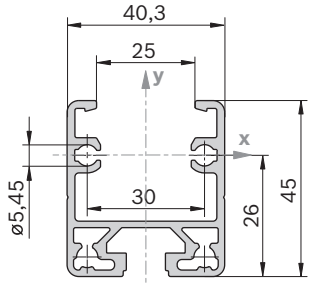

- U-profile with 10 mm slot

U-profile		L (mm)	ESD	No.
1 pc		30 ... 6070		**3 842 993 316 / L**
20 pcs		6070		**3 842 535 115**
1 pc		30 ... 6070	ESD	**3 842 995 027 / L**
20 pcs		6070	ESD	**3 842 541 814**

Material: U-profile: Aluminum, anodized
U-profile ESD: Aluminum, untreated

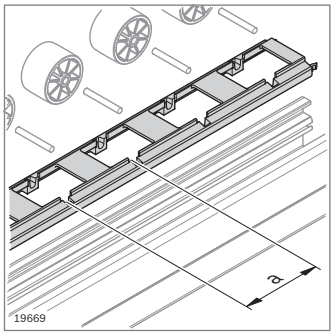

- Roller carrier for rollers D32 and D32SK (p. 12-20)

Roller carrier	a (mm)	ESD		No.
D32/37.5	37.5		20	**3 842 537 944**
		ESD	20	**3 842 537 945**
D32/50	50		20	**3 842 532 887**
		ESD	20	**3 842 538 094**
D 32SK/50	50		20	**3 842 532 886**
		ESD	20	**3 842 537 947**

Material: ABS

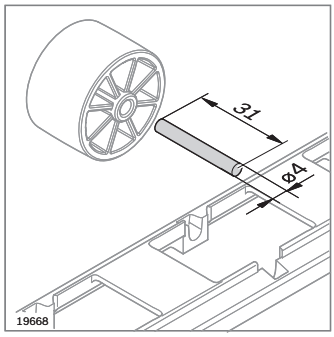

▶ Steel axle for rollers D32, D32SK

Steel axle	ESD		No.
		100	**3 842 532 862**
Material:	Steel; stainless		

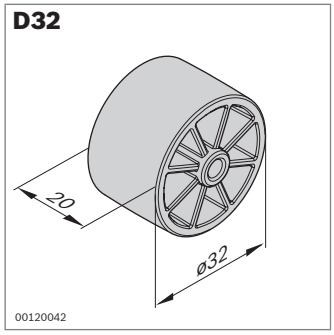

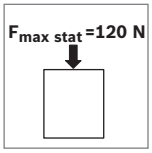

Roller	Color	ESD		No.
D32	Black		100	**3 842 532 865**
			100	**3 842 537 961**
	Red		100	**3 842 532 866**
			100	**3 842 537 960**
	Yellow		100	**3 842 532 870**
			100	**3 842 537 959**
	Green		100	**3 842 532 752**
			100	**3 842 537 958**
Material:	PE; colored / ESD made of PA, colored			

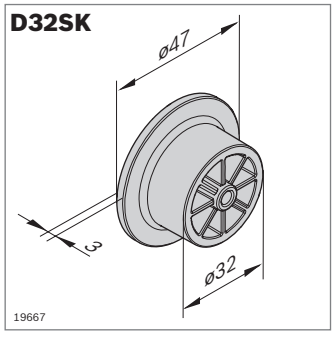

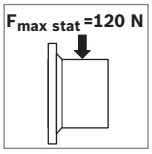

Roller	Color	ESD		No.
D32SK	Black		100	**3 842 532 867**
			100	**3 842 537 965**
	Red		100	**3 842 532 883**
			100	**3 842 537 964**
	Yellow		100	**3 842 532 884**
			100	**3 842 537 963**
	Green		100	**3 842 532 880**
			100	**3 842 537 962**
Material:	PE; colored / ESD made of PA, colored			

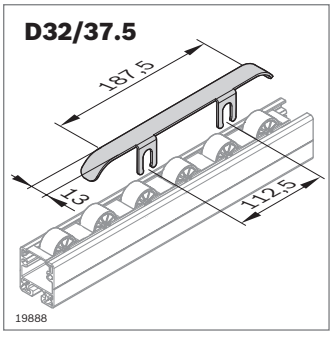

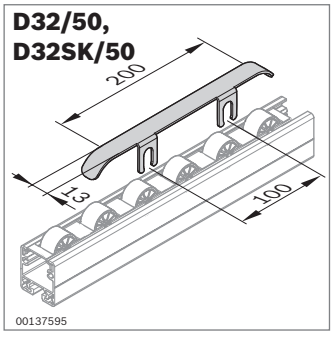

Brake	ESD		No.
D32/37.5		20	**3 842 537 948**
D32/50, D32SK/50		20	**3 842 532 881**
Material:	Steel; galvanized		

GS

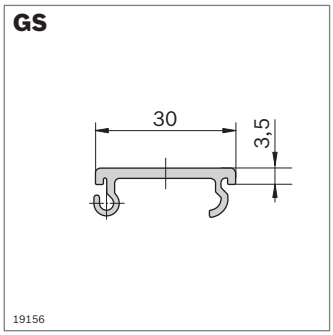

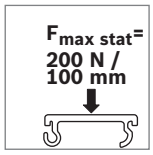

- Slide rail GS for constructing conveyor tracks with large gradients
- Slide rail for use with heavy containers

Slide rail	Color	L (mm)	ESD		No.
GS	Dust gray	3000		20	**3 842 535 124**
	Black	3000	⚠	20	**3 842 537 803**
Material:	PVC				

GSSK

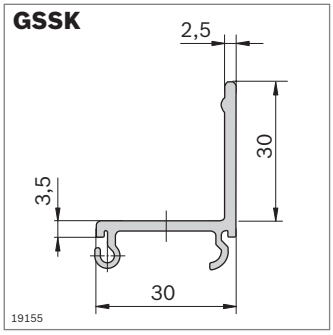

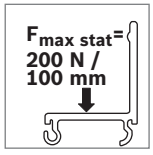

- Slide rail with lateral guide GSSK for constructing conveyor tracks with large gradients
- Slide rail for use with heavy containers

Slide rail	Color	L (mm)	ESD		No.
GSSK	Dust gray	3000		20	**3 842 537 806**
	Black	3000	⚠	20	**3 842 537 807**
Material:	PVC				

RE45SK

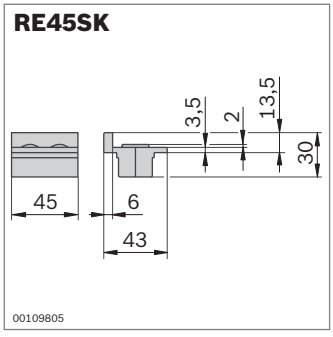

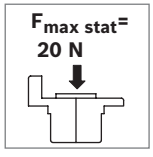

Roller element	Color	ESD		No.
RE45SK	Signal gray		100	**3 842 554 748**
	Black	⚠	100	**3 842 538 065**
Material:	PA			

RE45

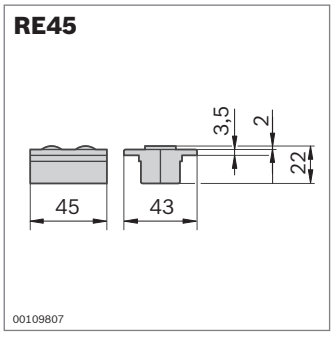

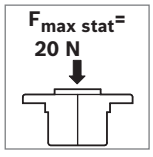

Roller element	Color	ESD		No.
RE45	Signal gray		100	**3 842 554 746**
	Black	⚠	100	**3 842 538 064**
Material:	PA			

RE39

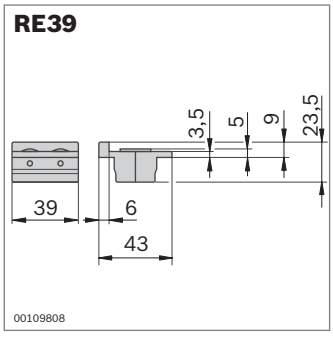

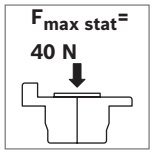

Roller element	Color	ESD		No.
RE39	Black		10	**3 842 520 000**
	Black	⚠	10	**3 842 538 245**
Material:	PA			

12

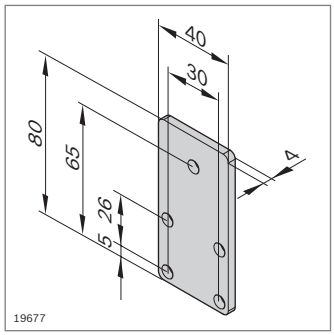

FS1

S6x16-T25

Stop plate with stop	ESD		No.	FS
40x80		20	**3 842 535 121**	4xFS1

Material: Steel; galvanized
Scope of delivery: Incl. fastening material (FS)

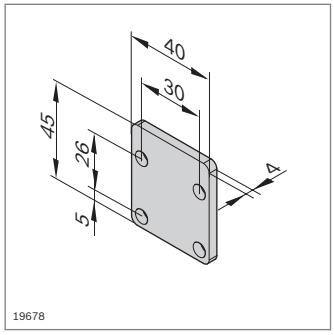

FS1

S6x16-T25

Stop plate without stop	ESD		No.	FS
40x45		20	**3 842 535 122**	4xFS1

Material: Steel; galvanized
Scope of delivery: Incl. fastening material (FS)

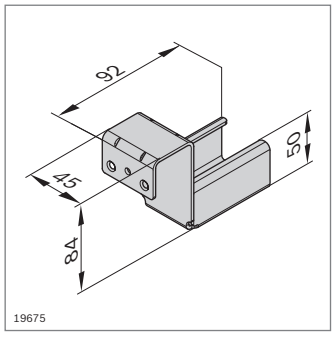

FS2

M8x12

10

Rail holder with stop	ESD		No.	FS
		20	**3 842 537 660**	FS2

Material: Steel; galvanized
Scope of delivery: Incl. fastening material (FS)

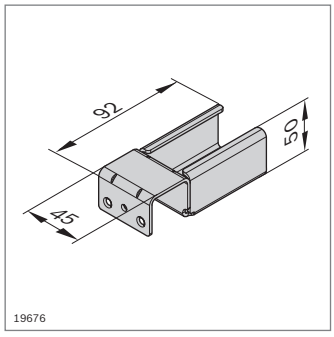

FS2

M8x12

10

Rail holder without stop	ESD		No.	FS
		20	**3 842 537 661**	FS2

Material: Steel; galvanized
Scope of delivery: Incl. fastening material (FS)

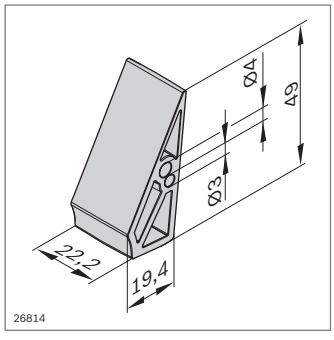

FS2

M8x12

10

Stopper XLean/Lean	ESD		No.	FS
		10	**3 842 552 151**	FS2

Material: PP
Fastening material: Steel; galvanized
Scope of delivery: Incl. fastening material (FS)

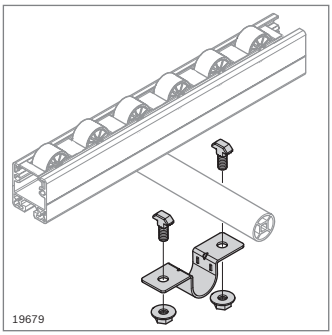

FS3

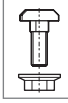

Tube clamp D28		No.	FS
	20	**3 842 535 364**	2xFS3

Material:	Steel; galvanized
Scope of delivery:	Incl. fastening material (FS)

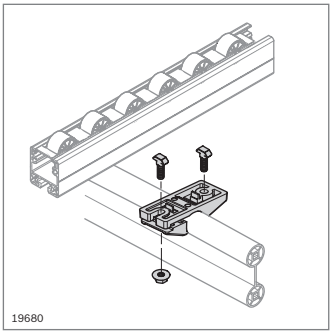

FS4

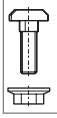

Holder for strut profile D28x55		No.	FS
	20	**3 842 537 720**	2xFS4

Material:	Diecast aluminum Fastening material: Steel; galvanized
Scope of delivery:	Incl. fastening material (FS)

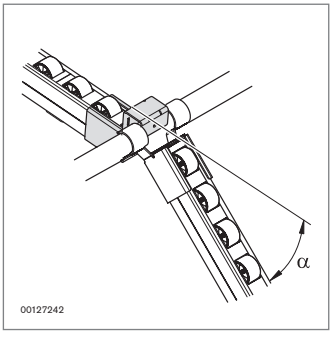

FS5

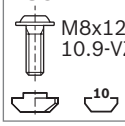

- Flexible bridge with maximum tilt (α_{max}) from horizontal:
  - With round tube D28 (p. 2-70): α_{max} = 40°
  - With strut profile D28x55 (p 2-71): α_{max} = 30°

Flexible bridge		No.	FS
	20	**3 842 537 951**	FS5

Material:	Steel; galvanized

12

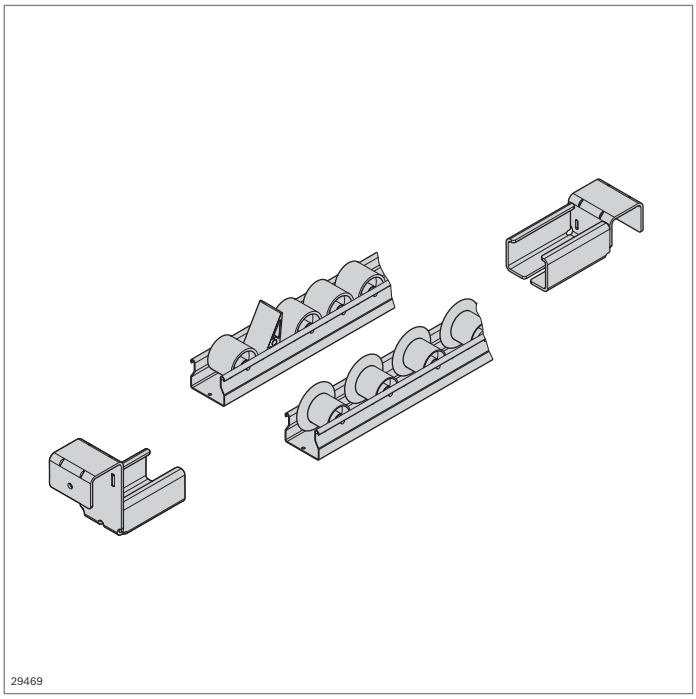

Elements for the construction of conveyor track XLean

- Conveyor track made of steel profiles with plastic rollers and optional roller flange
- Available as ESD-conductive version.
- Self-supporting roller section
- Roller section with drill holes for fastening

Accessories:
Round tube D28 (p. 2-70)

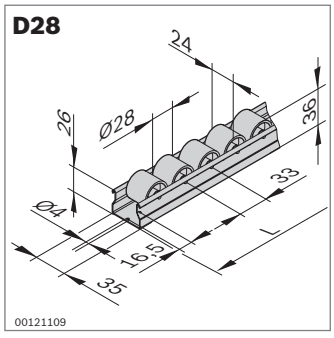

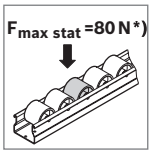

* per roller

Roller section	Color	L (mm)	ESD		No.
D28	Gray	100 ... 4500		1	**3 842 993 321 / L**
		4500		50	**3 842 537 776**
	Black	100 ... 4500		1	**3 842 993 431 / L**
		4500		50	**3 842 537 778**
Material:	Rail: Steel, galvanized Roller: PP				

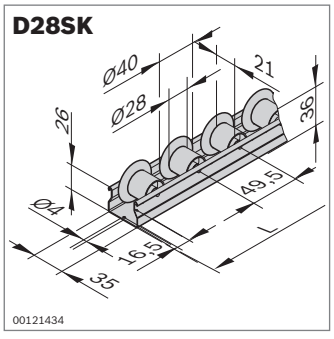

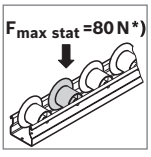

* per roller

Roller section	Color	L (mm)	ESD		No.
D28SK	Gray	100 ... 4500		1	**3 842 993 322 / L**
		4500		50	**3 842 537 777**
	Black	100 ... 4500		1	**3 842 993 432 / L**
		4500		50	**3 842 537 779**
Material:	Rail: Steel, galvanized Roller: PP				

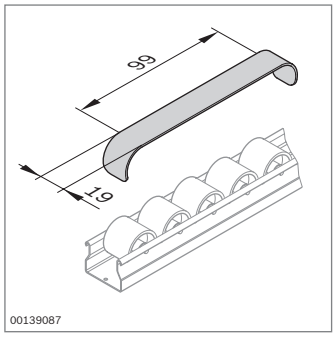

Brake		No.
	20	**3 842 532 871**
Material:	Steel; galvanized	

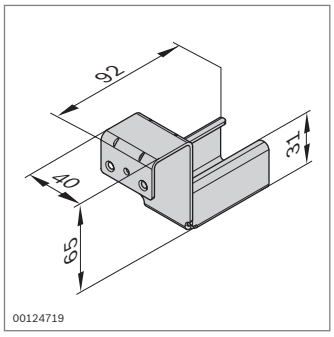

Rail holder with stop			No.
		20	**3 842 538 372**
Material:	Steel; galvanized		

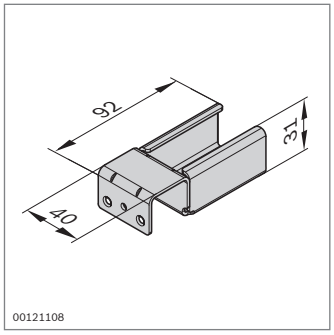

Rail holder without stop			No.
		20	**3 842 537 687**
Material:	Steel; galvanized		

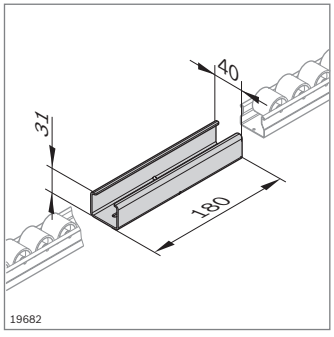

Section link			No.
		20	**3 842 536 722**
Material:	Steel; galvanized		

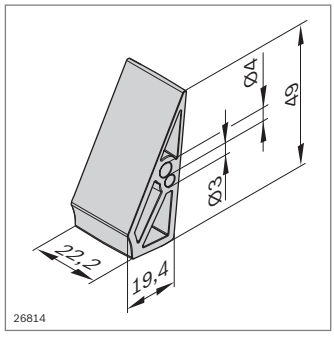

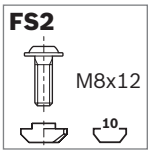

Stopper XLean/Lean	ESD		No.	FS
		10	**3 842 552 151**	FS2
Material:	PP Fastening material: Steel; galvanized			
Scope of delivery:	Incl. fastening material (FS)			

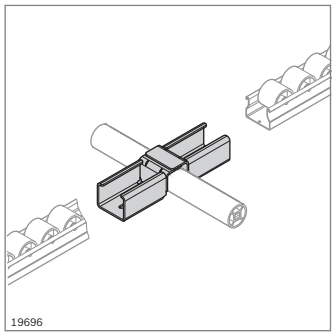

Bridge		No.
	20	**3 842 536 724**
Material:	Steel; galvanized	

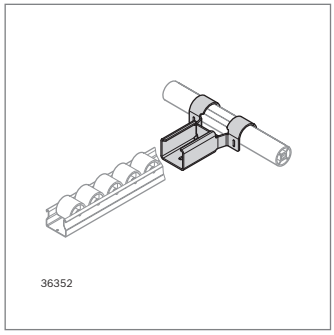

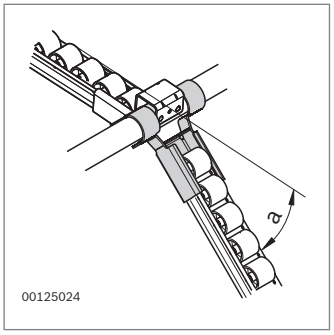

- Flexible bridge with maximum tilt (α_{max}) from horizontal:
  - With round tube D28 (p. 2-70): α_{max} = 40°
  - With strut profile D28x55 (p 2-71): α_{max} = 30°

Flexible bridge		No.
	20	**3 842 537 911**
Material:	Steel; galvanized	

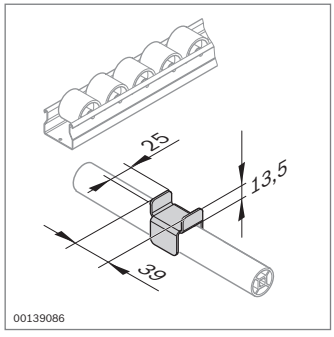

Mounting		No.
	20	**3 842 537 657**
Material:	Steel; galvanized	

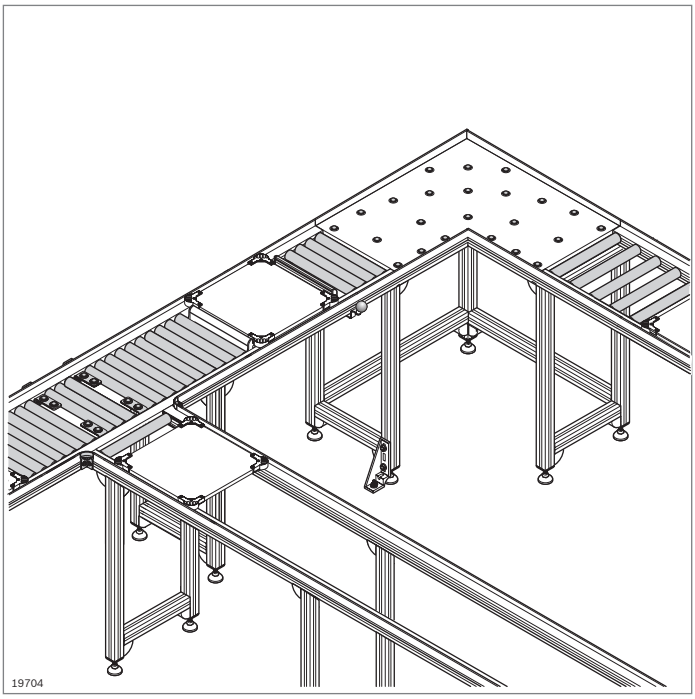

Elements for the construction of conveyor track EcoFlow

- Based on EcoFlow section profile
- For manual slide sections with rollers
- Clip-in guide profiles with lateral guide and clip-in conveyor rollers

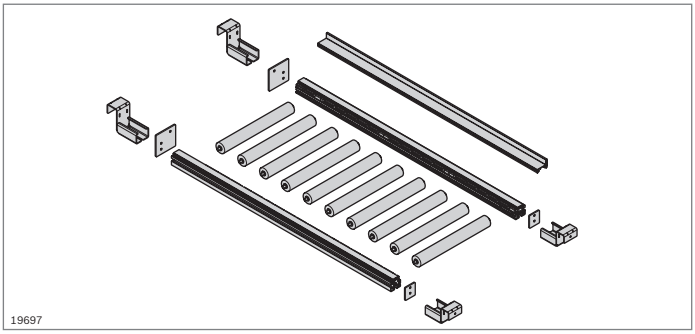

MV45x45

A = 6,2 cm²
I_x = 11,8 cm⁴
I_y = 10,5 cm⁴
W_x = 5,3 cm³
W_y = 4,7 cm³
m = 1,7 kg/m

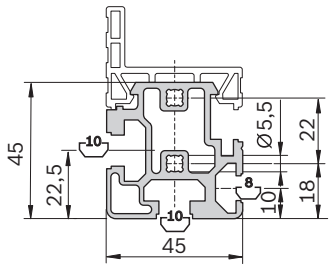

Section profile MV45x45		L (mm)	No.
1 pc		30 ... 6070	**3 842 993 029 / L**
20 pcs		6070	**3 842 537 321**
Material:	Aluminum; anodized		

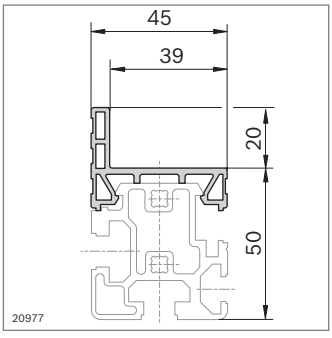

Guide profile MV45	Color	L (mm)	ESD		No.
	Dusty gray RAL 7037	30 ... 3000		1	**3 842 993 511 / L**
	Dusty gray RAL 7037	3000		10	**3 842 525 443**
	Black	30 ... 3000	⚠	1	**3 842 993 512 / L**
	Black	3000	⚠	10	**3 842 526 034**
Material:	PVC				

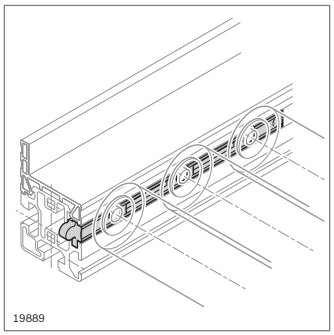

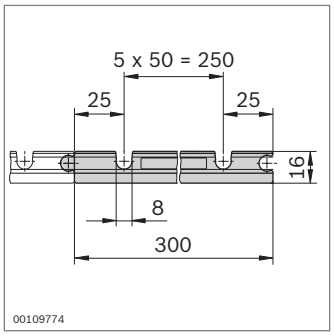

EcoFlow roller carrier	ESD		No.
	ESD	10	**3 842 535 683**

Material: ABS; black

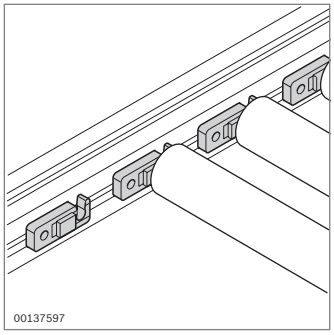

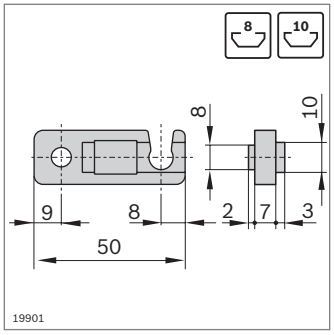

Roller fixation	Slot		No.	FS
	8	10	**3 842 535 667**	FS1
	10	10	**3 842 535 668**	FS2

Material: Roller fixation: PA6, black
Fastening material: Steel; galvanized
Scope of delivery: Incl. fastening material (FS)

FS1

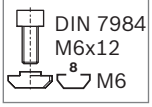

FS2

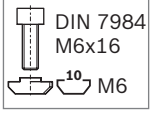

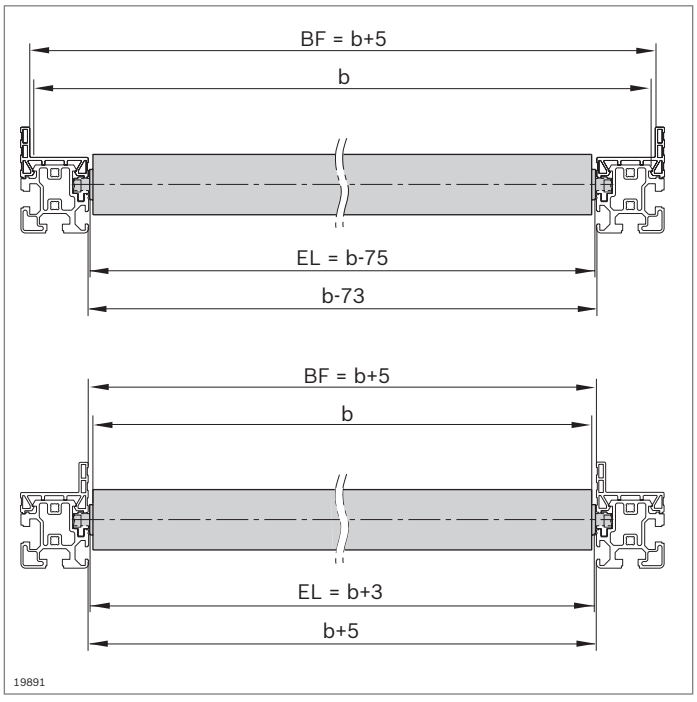

EcoFlow roller	F_{max} (N)	EL (mm)	ESD	No.
Plastic, gray	150	105 ... 605		**3 842 994 989 / L**
		225		**3 842 525 740**
		325		**3 842 525 741**
		425		**3 842 525 742**
		525		**3 842 537 164**
Steel; galvanized	500	105 ... 1005	ESD	**3 842 994 988 / L**
		225	ESD	**3 842 525 737**
		325	ESD	**3 842 525 738**
		425	ESD	**3 842 525 739**
		525	ESD	**3 842 537 163**
Stainless steel	150	105 ... 1005		**3 842 995 008 / L**

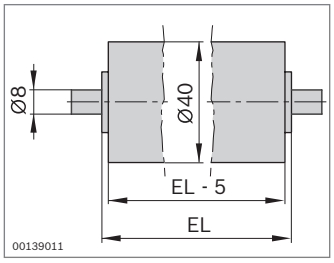

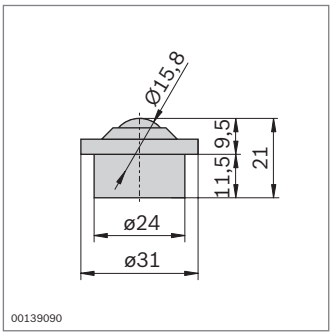

F_{max}=500 N

- Ball roller for smooth manual movement of goods with large-surfaces

Ball roller	ESD		No.
		20	**3 842 541 008**

Material: Housing: Steel; galvanized
Ball: Stainless steel

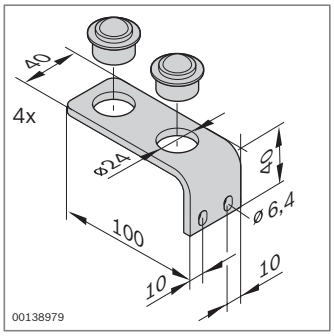

FS1
M6x16
M6

Transverse conveying	ESD		No.	FS
		Set	**3 842 536 055**	8xFS1

Material: Bracket Steel; galvanized
Ball: Stainless steel
Scope of delivery: Incl. 4 x bracket plate, fastening material (FS) for 10 mm slot

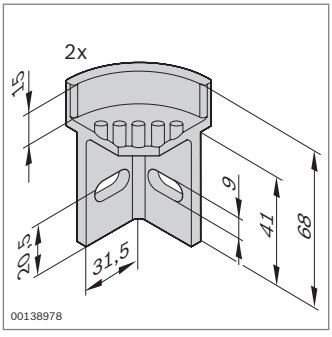

FS2
HS10-M8x20
M8

Corner piece	ESD		No.	FS
		Set	**3 842 536 056**	4xFS2

Material: PA; black
Scope of delivery: Incl. 2 x corner piece, fastening material (FS) for 10 mm slot

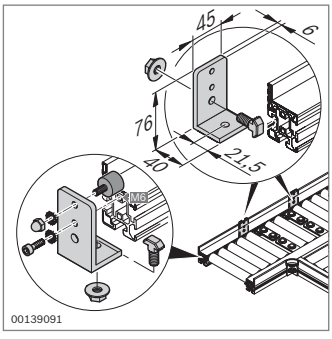

FS3
HS10-M8x25
DIN 1587-M6-6-82169

FS4
6-FST

FS5
W193-M8-10

FS6
DIN 7500 EE M6x30

Stop		No.	FS
	Set	**3 842 536 057**	2xFS3, 4xFS4, 2xFS5 2xFS6

Material: Aluminum; anodized
Scope of delivery: Incl. 2 x stop, fastening material (FS)

12

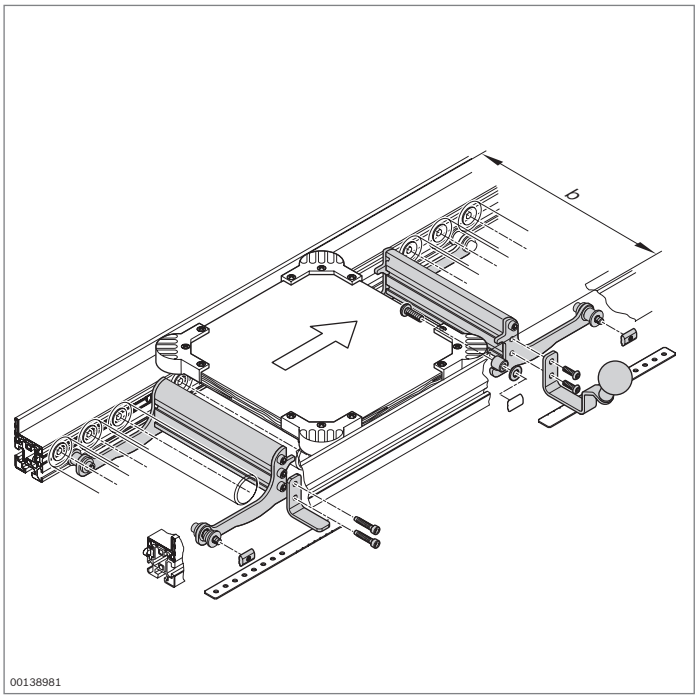

EcoFlow stop gates and return stops

- Stop gate and return stop for positioning workpiece pallets or containers
- At the planning stage remember to leave sufficient leg room. The stop gate and return stop require 45 mm more space below the bottom
- We recommend using a workpiece pallet with corner pieces (p. 12-31) to provide a defined stopping mechanism

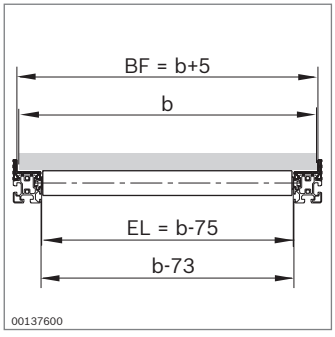

Stop gate	EL (mm)	No.
	105 ... 1005	**3 842 995 007 / EL**
	225	**3 842 537 894**
	325	**3 842 537 895**
	425	**3 842 537 896**
	525	**3 842 537 897**

Scope of delivery: Incl. Fastening material
Condition on delivery: As components (pre-assembled)

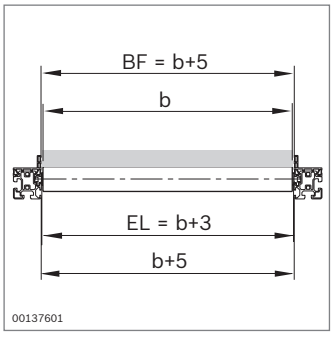

Return stop	EL (mm)	No.
	105 ... 1005	**3 842 995 017 / EL**
	225	**3 842 537 898**
	325	**3 842 537 899**
	425	**3 842 537 900**
	525	**3 842 537 901**

Scope of delivery: Incl. Fastening material
Condition on delivery: As components (pre-assembled)

EcoFlow accessories

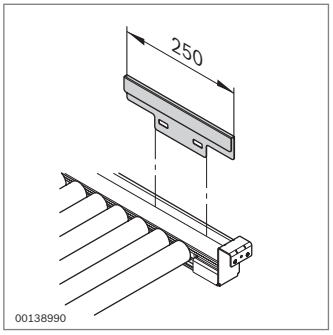

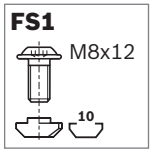

- Protective cover to protect the EcoFlow guide profile when loading the conveyor track

Protective cover		No.	FS
Outer slide rail	Set	**3 842 537 583**	4xFS1

Material: Steel; galvanized
Scope of delivery: Incl. 2 x protective cover, fastening material (FS)

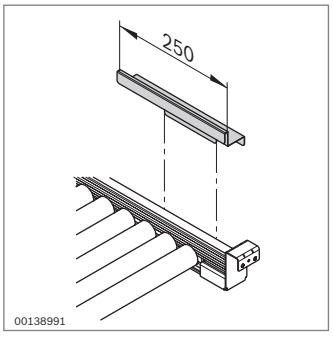

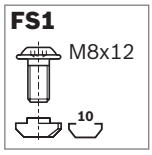

- Protective cover to protect the EcoFlow guide profile when loading the conveyor track

Protective cover		No.	FS
Inner slide rail	Set	**3 842 537 584**	4xFS1

Material: Steel; galvanized
Scope of delivery: Incl. 2 x protective cover, fastening material (FS)

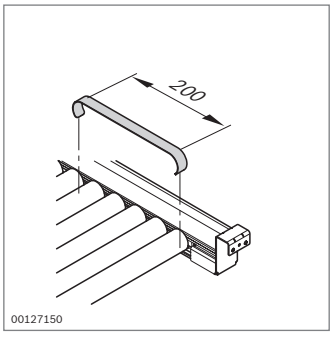

- Brake for bringing containers to a stop gently

Brake		No.
	20	**3 842 537 740**

Material: Steel; galvanized

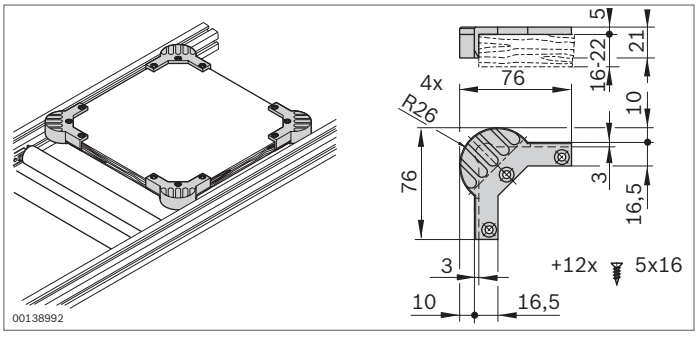

- Corner pieces for assembly of workpiece pallets
- For isolating parts from the pallet queue, well-defined guidance and stopping surfaces, good transition through curves and avoidance of edges where trapping may occur

Corner pieces for workpiece pallets	ESD		No.
	⚠	Set	**3 842 536 054**

Material: PA; black

12

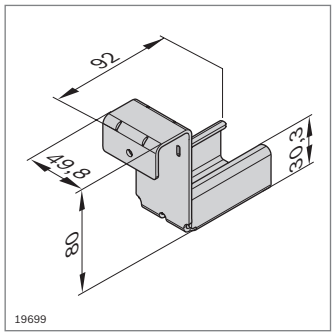

FS5
M8x12-10.9-VZ
10 M8

Rail holder with stop		No.	FS
	20	**3 842 537 664**	FS5

Material: Steel; galvanized
Accessories: Round tube D28 (p. 2-70)
Scope of delivery: Incl. fastening material (FS)

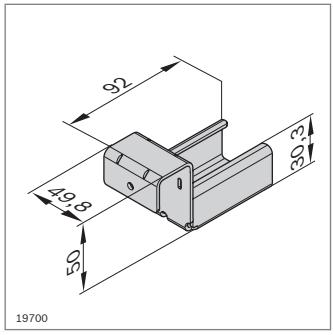

FS5
M8x12-10.9-VZ
10 M8

Rail holder without stop		No.	FS
	20	**3 842 537 665**	FS5

Material: Steel; galvanized
Accessories: Round tube D28 (p. 2-70)
Scope of delivery: Incl. fastening material (FS)

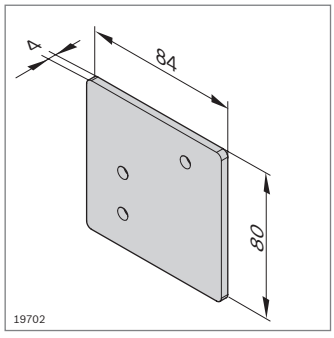

FS6
S6x16-T25

Stop plate with stop		No.	FS
	20	**3 842 537 593**	2xFS6

Material: Steel; galvanized
Scope of delivery: Incl. fastening material (FS)

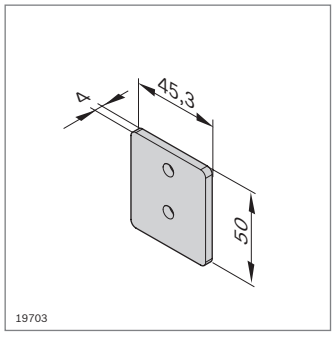

FS6
S6x16-T25

Stop plate without stop		No.	FS
	20	**3 842 537 592**	2xFS6

Material: Steel; galvanized
Scope of delivery: Incl. fastening material (FS)

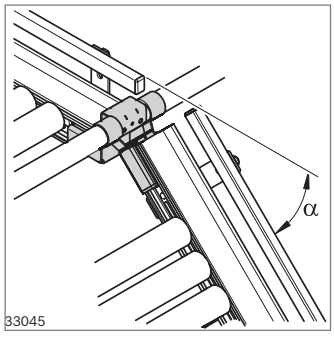

- Flexible bridge with maximum tilt (α_{max}) from horizontal:
  - With round tube D28 (p. 2-70): α_{max} = 40°
  - With strut profile D28x55 (p 2-71): α_{max} = 30°

Flexible bridge		No.
	20	**3 842 537 950**

Material: Steel; galvanized

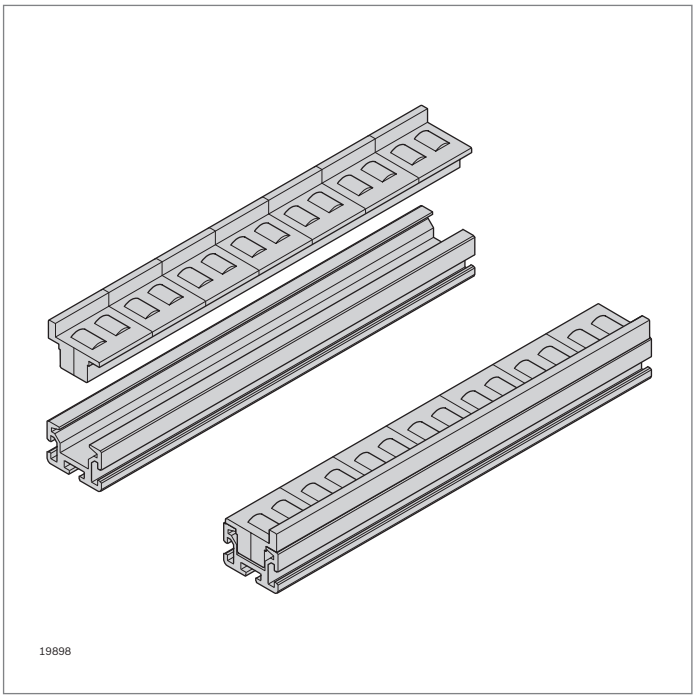

Conveyor track made of section profiles and roller elements

- Economical solution for manual slide sections
- Roller elements can be clipped in

Accessories:
Roller elements (p. 12-21)

SP 2/R

A = 5,2 cm²
I_x = 4,3 cm⁴
I_y = 11,7 cm⁴
W_x = 2,4 cm³
W_y = 5,2 cm³
m = 1,4 kg/m

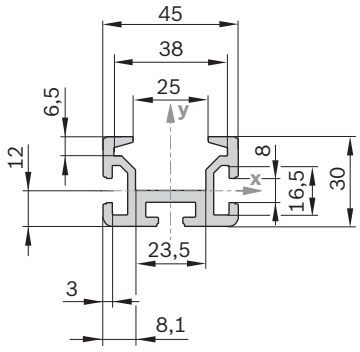

19893

Section profile SP 2/R		L (mm)	No.
		50 ... 6000	**3 842 992 676 / L**
Material:	Aluminum, natural-colored, anodized		

12

SP 2/B

A = 10,4 cm²
I_x = 49,6 cm⁴
I_y = 25,8 cm⁴
W_x = 12,1 cm³
W_y = 11,5 cm³
m = 2,8 kg/m

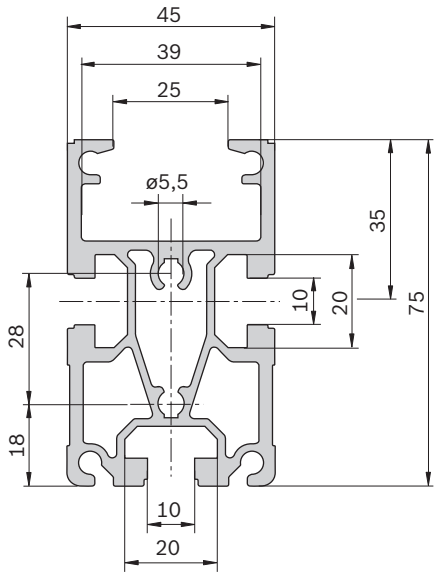

19604

Section profile SP 2/B		Slot	L (mm)	No.
1 pc		10	200...6070	**3 842 992 884 / L**
16 pcs		10	6070	**3 842 532 695**

Material: Aluminum, natural-colored, anodized
Accessories: Cross connector QV 2 (p. 12-42)

SP 2/B-50

A = 6,9 cm²
I_x = 46,2 cm⁴
I_y = 16,9 cm⁴
W_x = 5,3 cm³
W_y = 7,5 cm³
m = 1,9 kg/m

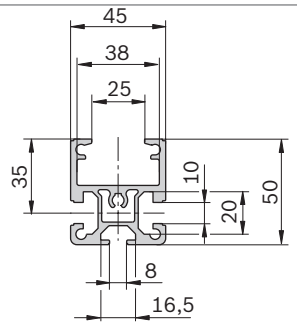

19605

Section profile SP 2/B-50		Slot	L (mm)	No.
1 pc		8 / 10	200...6070	**3 842 992 903 / L**
20 pcs		8 / 10	6070	**3 842 532 697**

Material: Aluminum, natural-colored, anodized

SP 2/B-100

A = 11,9 cm²
I_x = 95,1 cm⁴
I_y = 30,4 cm⁴
W_x = 20,0 cm³
W_y = 13,5 cm³
m = 3,2 kg/m

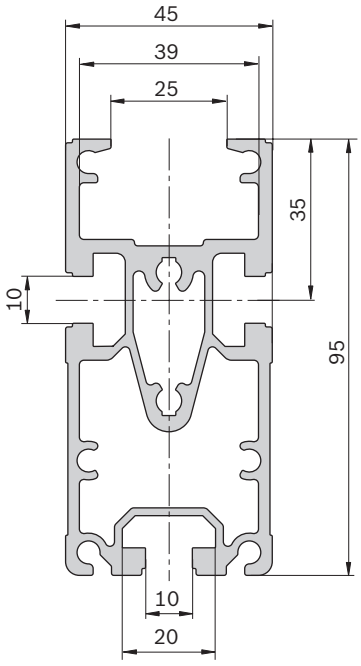

19606

Section profile SP 2/B-100		Slot	L (mm)	No.
1 pc			200...6070	**3 842 993 259 / L**
16 pcs		10	6070	**3 842 532 608**

Material: Aluminum, natural-colored, anodized
Accessories: Cross connector QV 2 (p. 12-42)

SP 2/BH

A = 12,4 cm²
I_x = 53,7 cm⁴
I_y = 28,6 cm⁴
W_x = 14,0 cm³
W_y = 13,8 cm³
m = 3,3 kg/m

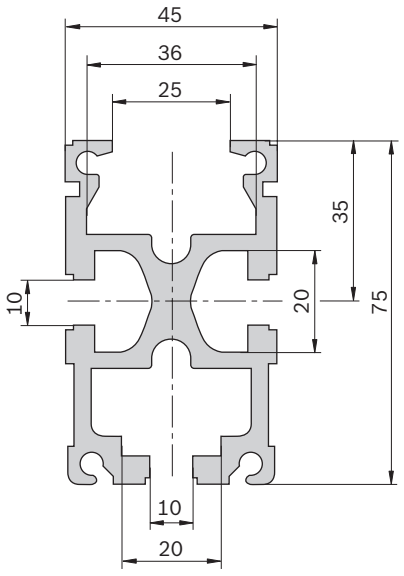

Section profile SP 2/BH		Slot	L (mm)	No.
1 pc		10	200...6070	**3 842 990 409 / L**
16 pcs		10	6070	**3 842 532 696**

Material: Aluminum, natural-colored, anodized
Accessories: Cross connector QV 2 (p. 12-42)

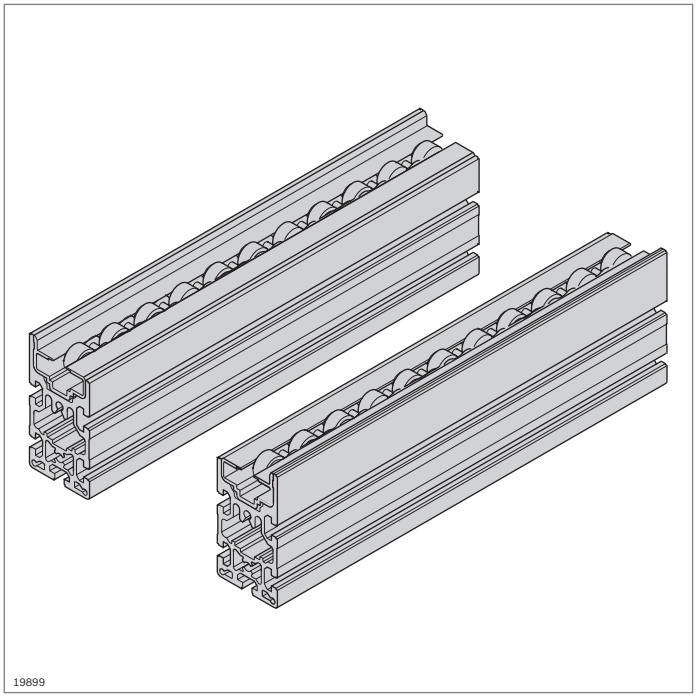

Conveyor sections made of SP 4/R section profiles and accumulation roller chains

- For constructing manual slide sections with high bearing loads (up to 2 kg/cm)
- For applications with and without workpiece p allets
- Low friction
- Steel chain with support wheels made of PA 12

ST 4/R

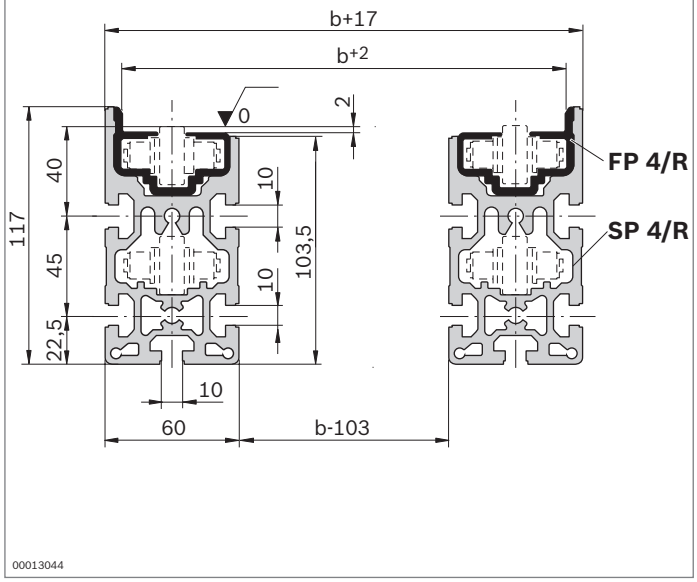

Section ST 4/R	L (mm)	No.
	200...6000	**3 842 994 839 / L**
Material:	Aluminum, natural-colored, anodized Guide profile: PA 12	
Scope of delivery:	2 x section profile SP 4/R 2 x guide profile FP 4/R	
Condition on delivery:	Assembled	
Accessories:	Accumulation roller chain (p. 12-38) Cross connector QV 4 (p. 12-38)	

SP 4/R

A = 26,13 cm²
I_x = 222,0 cm⁴
I_y = 95,5 cm⁴
W_x = 84,86 cm³
W_y = 16,41 cm³
m = 3,5 kg/m

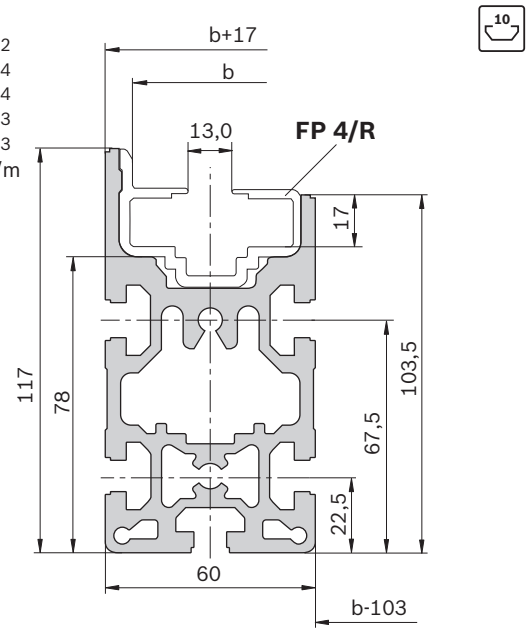

19608

Section profile SP 4/R		L (mm)	No.
10 pcs		6000	**3 842 532 505**

Material: Aluminum, natural-colored, anodized
Accessories: Guide profile FP 4/R
Accumulation roller chain (p. 12-38)
Cross connector QV 4 (p. 12-38)

FP 4/R

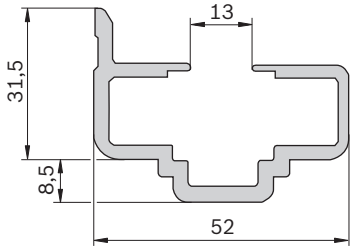

19610

Guide profile FP 4/R		L (mm)	ESD	No.
10 pcs		6000		**3 842 532 508**

Material: PA 12; black

12

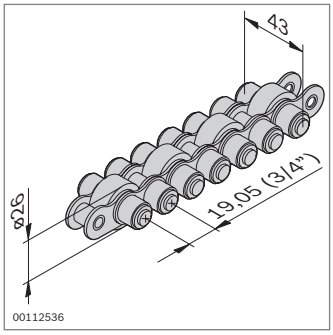

Accumulation roller chain		**L** (mm)	**No.**
Support wheel: PA 12		5000	**3 842 508 967**
Material:	Accumulation roller chain: Steel Support wheel: see ordering table		
Scope of delivery:	Incl. Chain lock		
Accessories:	Additional chain lock (**3 842 071 941**)		

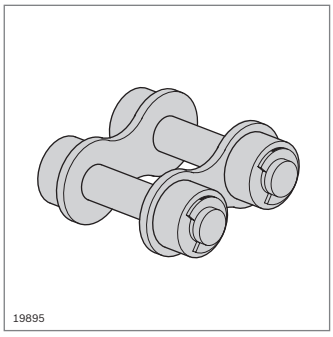

- Chain lock for extending accumulation roller chains

Chain lock		**No.**
		3 842 071 941
Material:	Steel	

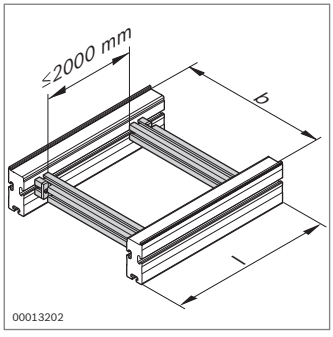

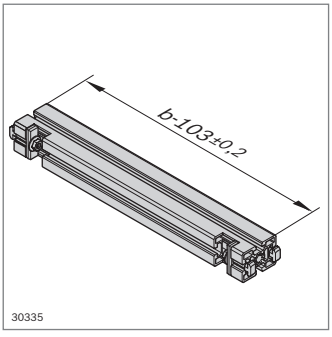

- Cross connector QV 4 for connecting two section profiles
- For defining the track width

Cross connector QV 4	**b** (mm)	**No.**
	443...1243	**3 842 994 832 / b**

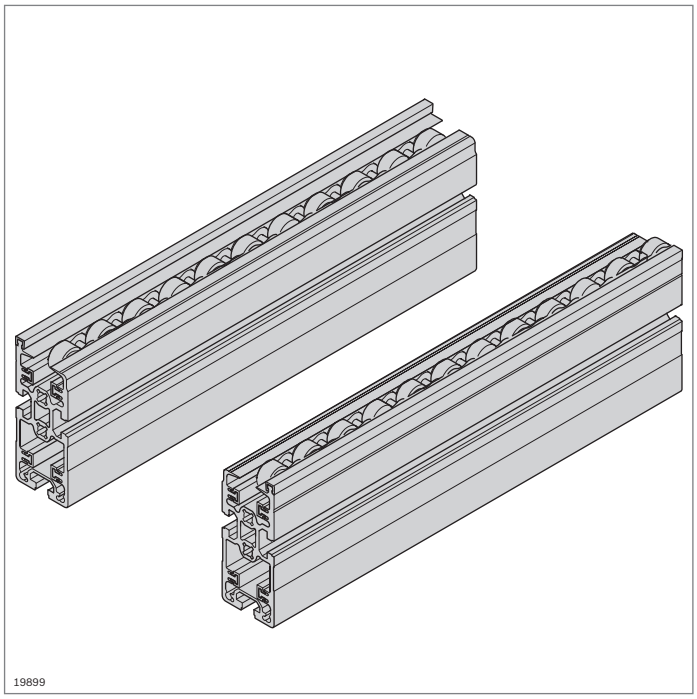

Conveyor sections made of SP 2 section profiles and accumulation roller chains

- For constructing manual slide sections with high bearing loads (up to 2.0 kg/cm)
- For applications with and without workpiece pallets
- Accumulation roller chain with and without small parts protection

ST 2/R-100

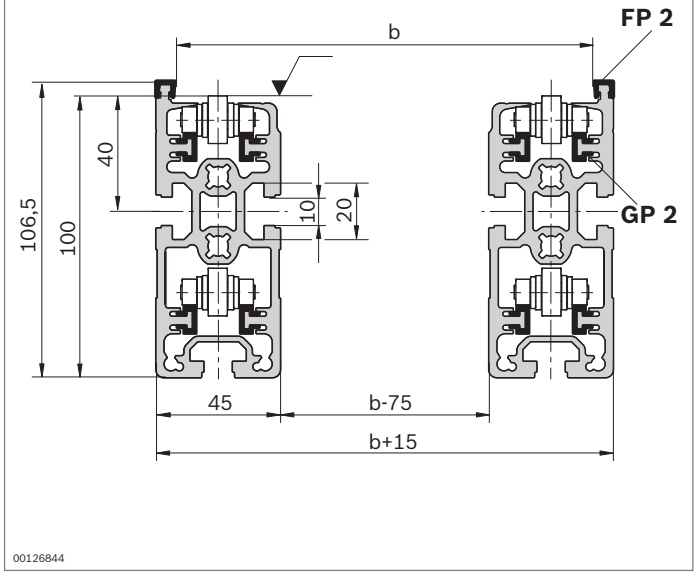

- Customizable section with plastic guide profile

Section ST 2/R-100	ESD	L (mm)	No.
	⏚	60 ... 6000	**3 842 994 889 /L**

Material:	Aluminum, natural-colored, anodized Glide profile, guide profile: PA 12
Scope of delivery:	2 x section profile SP 2/R-100 2 x guide profile FP 2 8 x glide profile GP 2
Condition on delivery:	Assembled
Accessories:	Accumulation roller chain (p. 12-42) Accumulation roller chain with small parts protection (p. 12-42) Cross connector QV 2, QV 2-H (p. 12-42)

ST 2/R-100-ST

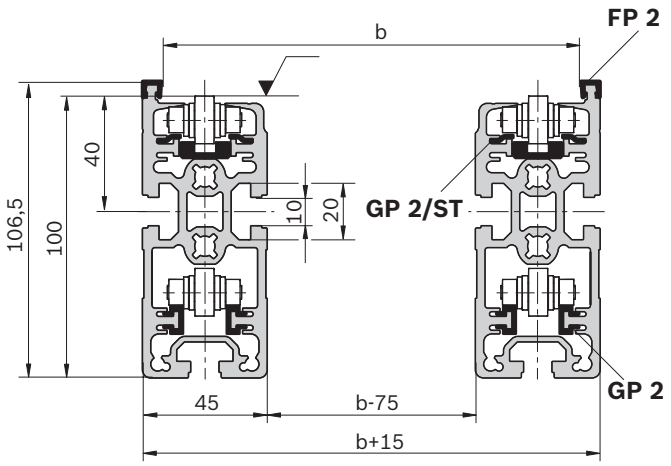

Section ST 2/R-100 ST	ESD	L (mm)	No.
		60 ... 6000	**3 842 994 907 / L**

Material:	Aluminum, natural-colored, anodized Slide profile: Steel Guide profile: PA 12 Accumulation roller chain guide profile PE
Scope of delivery:	2 x section profile SP 2/R-100 2 x guide profile FP 2 4 x glide profile GP 2 4 x glide profile GP 2/ST 2 x guide profile for accumulation roller chain
Condition on delivery:	Assembled
Accessories:	Accumulation roller chain (p. 12-42) Accumulation roller chain with small parts protection (p. 12-42) Cross connector QV 2, QV 2-H (p. 12-42)

SP 2/R-100

A = 16,4 cm²
I_x = 144,0 cm⁴
I_y = 40,1 cm⁴
W_x = 27,7 cm³
W_y = 17,8 cm³
m = 4,4 kg/m

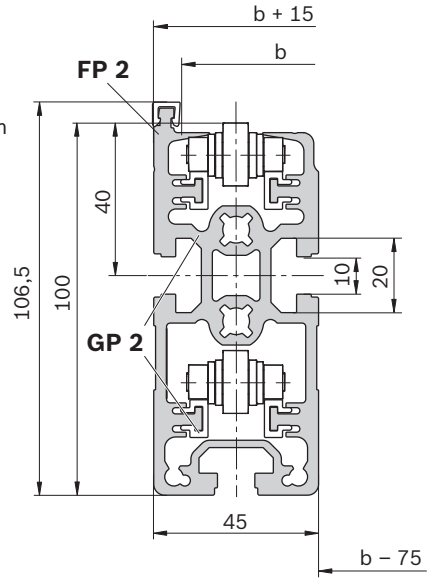

Section profile SP 2/R-100	L (mm)	No.
16 pcs	6070	**3 842 529 931**

Material:	Aluminum, natural-colored, anodized
Accessories:	PA guide and glide profile (p. 12-41) ST guide and glide profile (p. 12-41)

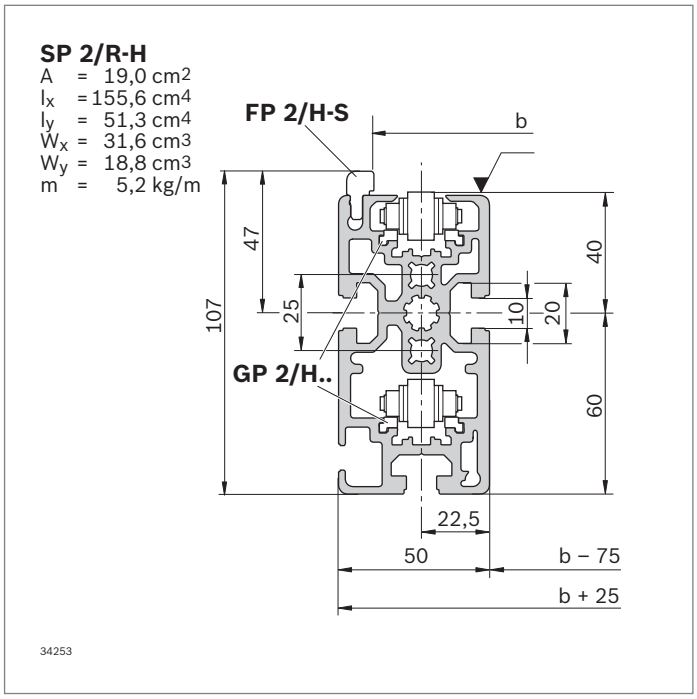

Section profile SP 2/R-H		L (mm)	No.
12 pcs		6070	**3 842 536 792**

Material: Aluminum, natural-colored, anodized
Accessories: Guide profile FP 2/H-ST
Glide profile GP 2/H-KST
Glide profile GP 2/H-ST

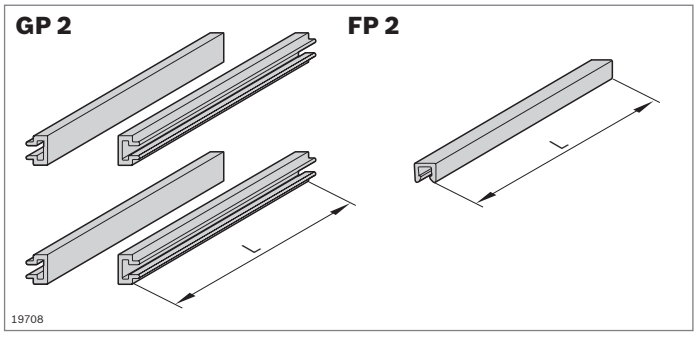

Guide and glide profile PA	ESD	No.
	ESD	**3 842 529 933**

Material: PA 12; black
Scope of delivery: 64 x glide profile GP 2 (L = 6000 mm)
16 x guide profile FP 2 (L = 6000 mm)



Guide and glide profile ST	ESD	No.
	ESD	**3 842 532 676**

Material: GP 2/ST: Steel; corrosion-resistant
Accumulation roller chain guide profile PE
Scope of delivery: 32 x glide profile GP 2/ST (L = 3000 mm)
24 x guide profile for accumulation roller chain (L = 2000 mm)

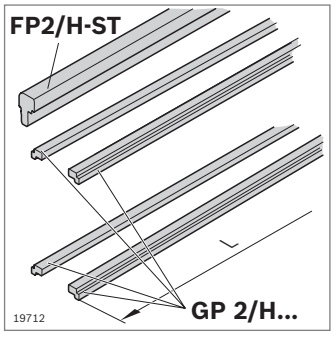

Guide profile			L (mm)	ESD	No.
FP 2/H-ST	24 pcs		3000	ESD	**3 842 537 890**

Material: Steel; corrosion-resistant

Glide profiles			L (mm)	ESD	No.
GP 2/H-ST	48 pcs		3000	ESD	**3 842 537 888**
GP 2/H-KST	48 pcs		3000	ESD	**3 842 537 889**

Material: H-KST: PA
H-ST: Steel; corrosion-resistant

12

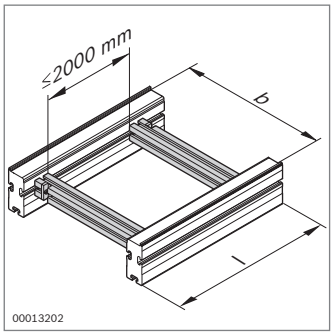

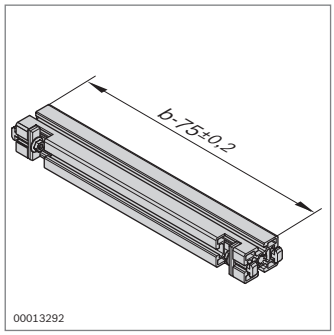

- Cross connector QV 2 for connecting two section profiles
- For defining the track width

Cross connector QV 2	b (mm)	No.
	160...1200	**3 842 994 635 / b**

Material: Aluminum, natural-colored, anodized
Fastening material: Steel
Scope of delivery: Strut profile 45x60, 2 x QV mounting kit (p. 3-62)

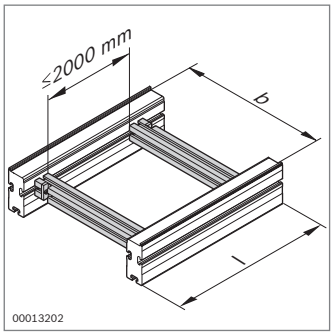

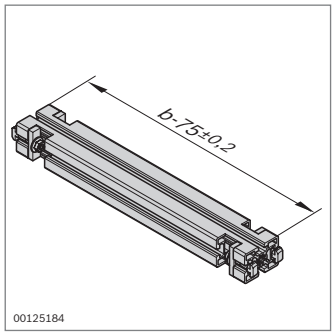

- Cross connector QV 2-H for connecting two section profiles
- For heavy applications
- For defining the track width

Cross connector QV 2-H	b (mm)	No.
	160...1200	**3 842 993 052 / b**

Material: Aluminum, natural-colored, anodized
Fastening material: Steel
Scope of delivery: Strut profile 45x60, 4 x QV mounting kit (p. 3-62)

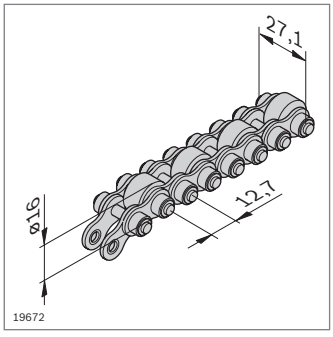

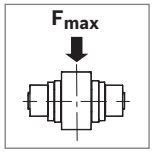

Accumulation roller chain	F_{max} (kg/cm)	L (mm)	No.
Support wheel: PA 12	1.5	12000	**3 842 523 918**
Support wheel: Steel	2.0[1]/1,5[2]	12000	**3 842 530 864**

[1] When using glide profile GP 2/ST
[2] When using glide profile GP 2

Material: Accumulation roller chain: Steel
Support wheel: see ordering table
Scope of delivery: Incl. Chain lock
Accessories: Additional chain lock (**3 842 530 417**)

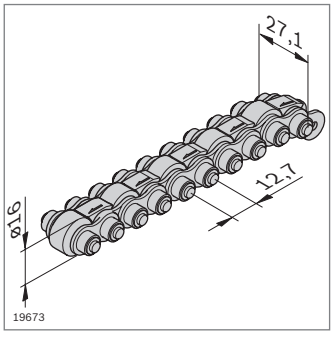

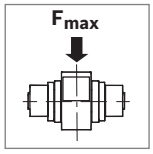

Accumulation roller chain with small parts trap	F_{max} (kg/cm)	L (mm)	No.
Support wheel: PA 12	1.5	12000	**3 842 536 268**
Support wheel: Steel	2.0[1]/1,5[2]	12000	**3 842 536 270**

[1] When using glide profile GP 2/ST
[2] When using glide profile GP 2

Material: Accumulation roller chain: Steel
Support wheel: see ordering table
Scope of delivery: Incl. Chain lock
Accessories: Additional chain lock (**3 842 530 417**)

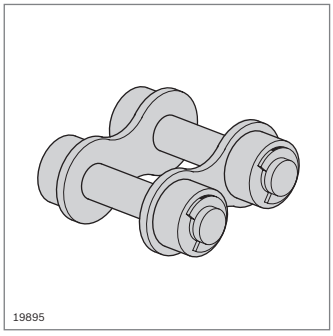

- Chain lock for extending accumulation roller chains

Chain lock	No.
	3 842 530 417

Material: Steel

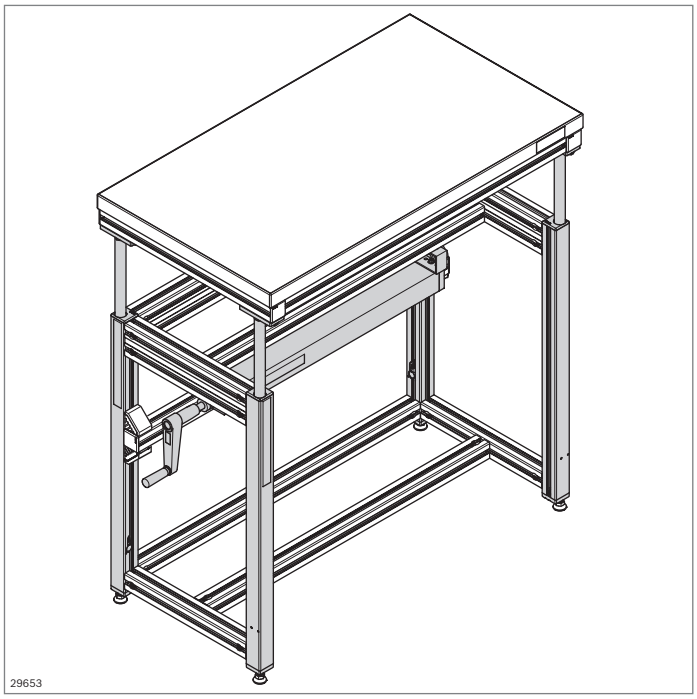

Components for height adjustment 45x45 and 45x60

10

- Infinitely variable hydraulic height adjustment with a crank handle, e.g. for work benches, tables or frames
- Max. bearing load per lifting module 800 N
- Maximum lift 400 mm
- Simplest mounting system due to use of hydraulic hoses with quick-release couplings
- Variable or fixed lengths for lifting module and hoses
- Can be used for the implementation of EN 1570-1, taking other measures for integration into products into consideration

Optional accessories:

- Connection elements, e.g. bracket (p. 3-18),
- Leveling foot, e.g. **3 842 529 025** (p. 6-4)

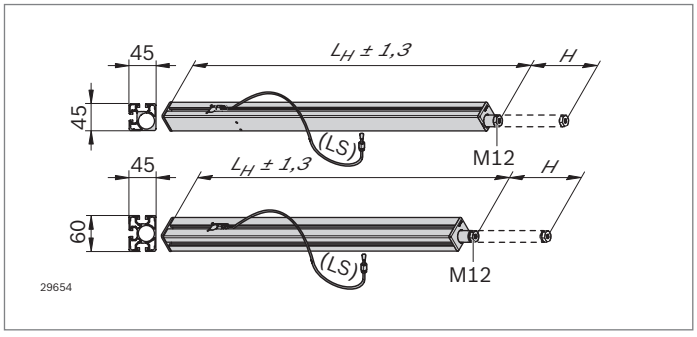

Lifting module		L_H (mm)	L_S (mm)		No.
45x45	Adaptable	720 ... 2000[1]	1000 ... 4000[2]	Set	**3 842 994 000/L_H/L_S**
	Standard	770	2500	Set	**3 842 552 131**
45x60	Adaptable	720 ... 2000[1]	1000 ... 4000[2]	Set	**3 842 994 001/L_H/L_S**
	Standard	770	2500	Set	**3 842 552 132**

[1] Lifting module length (L_H) can be ordered in 10 mm increments
[2] Hose length (L_S) can be ordered in 1000, 1500, 2000, 2500, 3000, 4000 mm

Scope of delivery:	2 x lifting module with integrated hydraulic cylinder incl. hose (bend radius min. 50 mm) and uick-release coupling; 2 x cover cap
Condition on delivery:	Assembled, filled with food-safe HPL oil of class NSF H1

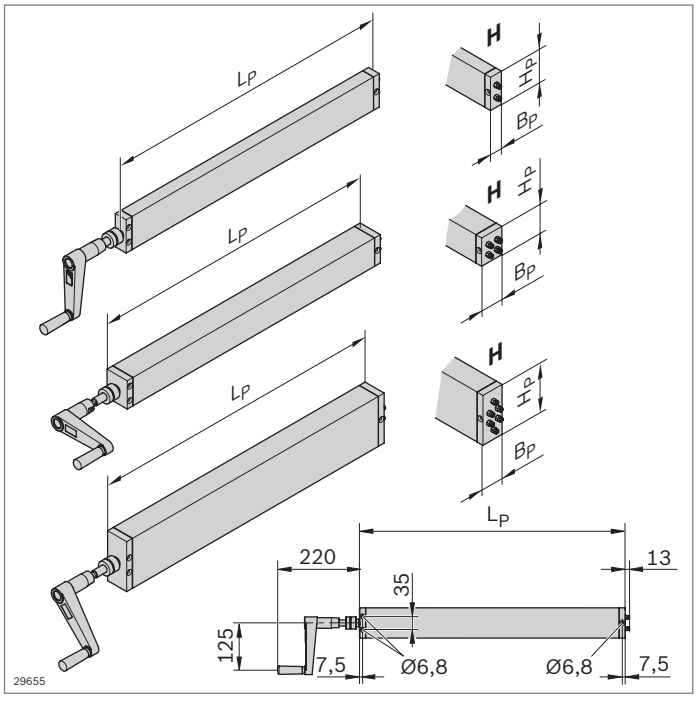

Pump and drive

- Synchronous activation of 2, 4 or 6 lifting modules
- Can be mounted in any position
- Incl. Friction clutch for load control
- 4 mm stroke per rotation
- Crank handle, retractable

Pump	Max. Load (N)	No. Lift module	L_P (mm)	B_P (mm)	H_P (mm)	No.
	1600	2	702.5±2	30	80	**3 842 552 133**
	3200	4	702.5±2	56	68	**3 842 552 134**
	3200	6	714.5±2	60	120	**3 842 552 135**

Scope of delivery:	Pump incl. hand crank and quick-release coupling
Condition on delivery:	Assembled, filled with food-safe HPL oil of class NSF H1

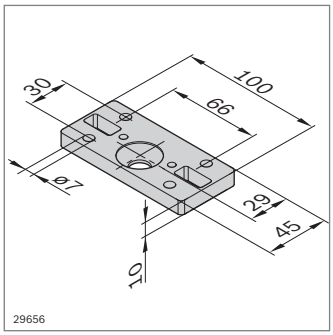

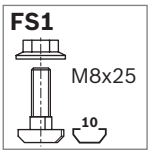





Connecting plate

- For mounting the lifting module on a foot, profile or table top

Connecting plate		No.	FS
	Set	**3 842 552 176**	4xFS1, 2xFS2, 4xFS3

Material:	Aluminum Fastening material: Steel; galvanized
Scope of delivery:	2 x connecting plate; incl. fastening material (FS)

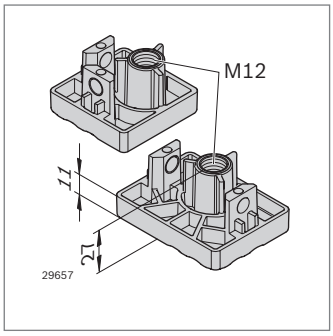



Adapter plate

- For mounting a leveling foot (e.g. **3 842 529 025**) to the lifting module
- Max. screw-in depth of the spindle with L_H = 720 mm: ~ 50 mm

Adapter plate		No.	FS
45x45	Set	**3 842 552 174**	4xFS4
45x60	Set	**3 842 552 175**	4xFS4

Material:	Diecast zinc Fastening material: Steel; galvanized,
Scope of delivery:	2 x adapter plate; incl. fastening material (FS)

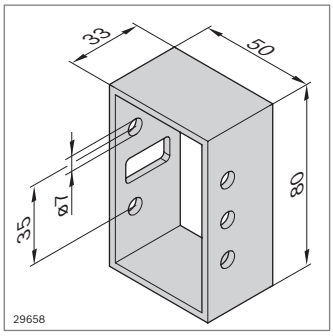

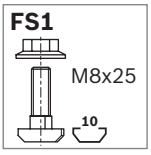

Connection adapter

- For mounting the pump on a profile or a table top
- Independent of the pump size, mounting requires 3 countersunk screws (ISO 10642, M6, 8.8) in 40 mm (pump for 2 lifting modules) or 70 mm (pump for 4 or 6 lifting modules)

Connection adapter		No.	FS
	Set	**3 842 552 177**	2xFS1

Material:	Aluminum Fastening material: Steel; galvanized
Scope of delivery:	2 x connection adapter; incl. fastening material (FS)

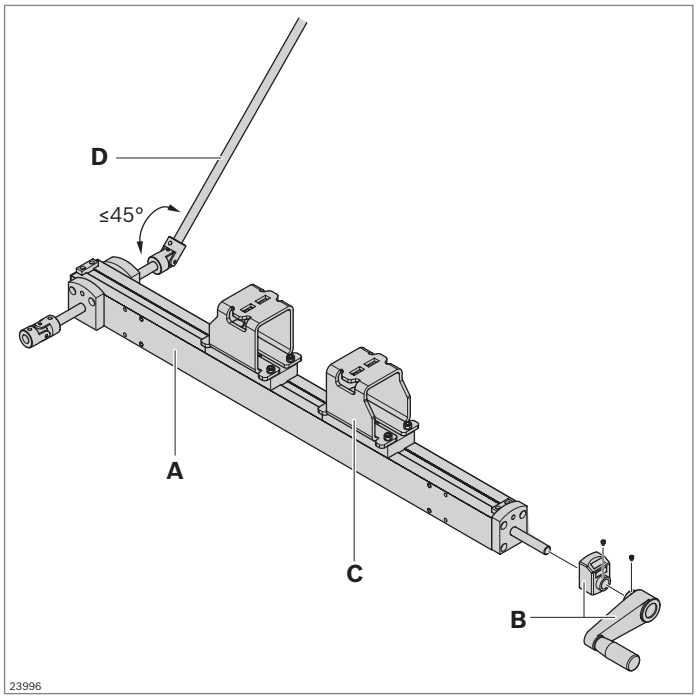

Adjustment unit

- Can be used for parallel width adjustment

Adjustment unit (A)	No.
	3 842 547 971

Crank handle (B)	No.
	3 842 547 990

Connection kit (C)	No.
	3 842 547 729

Profile rail D12 (D)		L (mm)	No.
1 pc		200 ... 3000	**3 842 993 306 / L**
6 pcs		3000	**3 842 533 841**

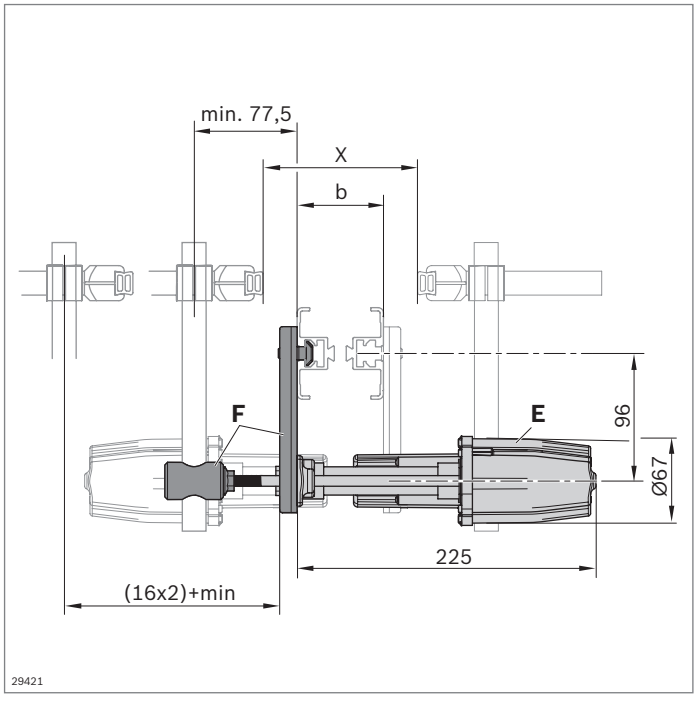

- Can be used for automatic (pneumatic) adjustment of lateral guides
- See also VarioFlow *plus* catalog (**R999000401**)

Adjustment unit (E)	No.
	3 842 547 707

Assembly kit (F)	No.
	3 842 547 718

12

Linear guides

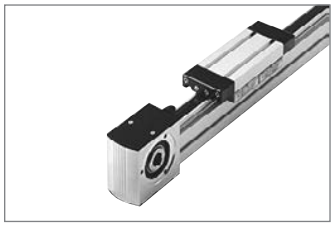

Cam roller guide LF6S
(p. 13-6)

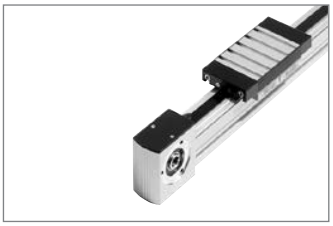

Cam roller guide LF6C
(p. 13-11)

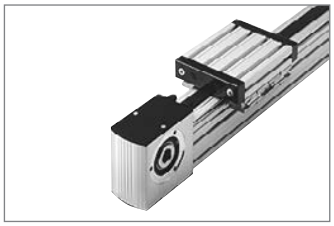

Cam roller guide LF12S
(p. 13-16)

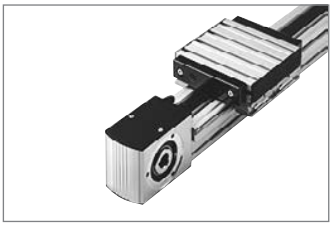

Cam roller guide LF12C
(p. 13-23)

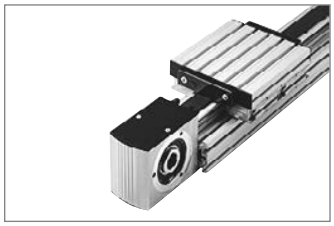

Cam roller guide LF20S
(p. 13-30)

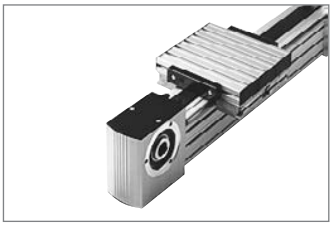

Cam roller guide LF20C
(p. 13-37)



Plug-in shafts, synchronous shafts (p. 13-47)

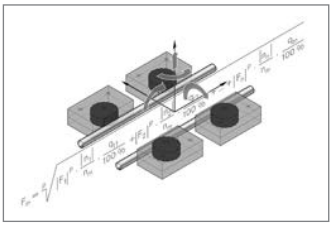

Design (p. 13-49)



Linear guides

- For constructing linear guides based on cam roller guides
- Cam roller guides are suitable for applications with high speeds and medium loads, in particular for the construction of handling equipment, feed systems, guides in work machines, and many other applications
- Fully pre-assembled in any required length or as individual components for assembly on site
- Without drive or with toothed belt drive for attaching gears and motors

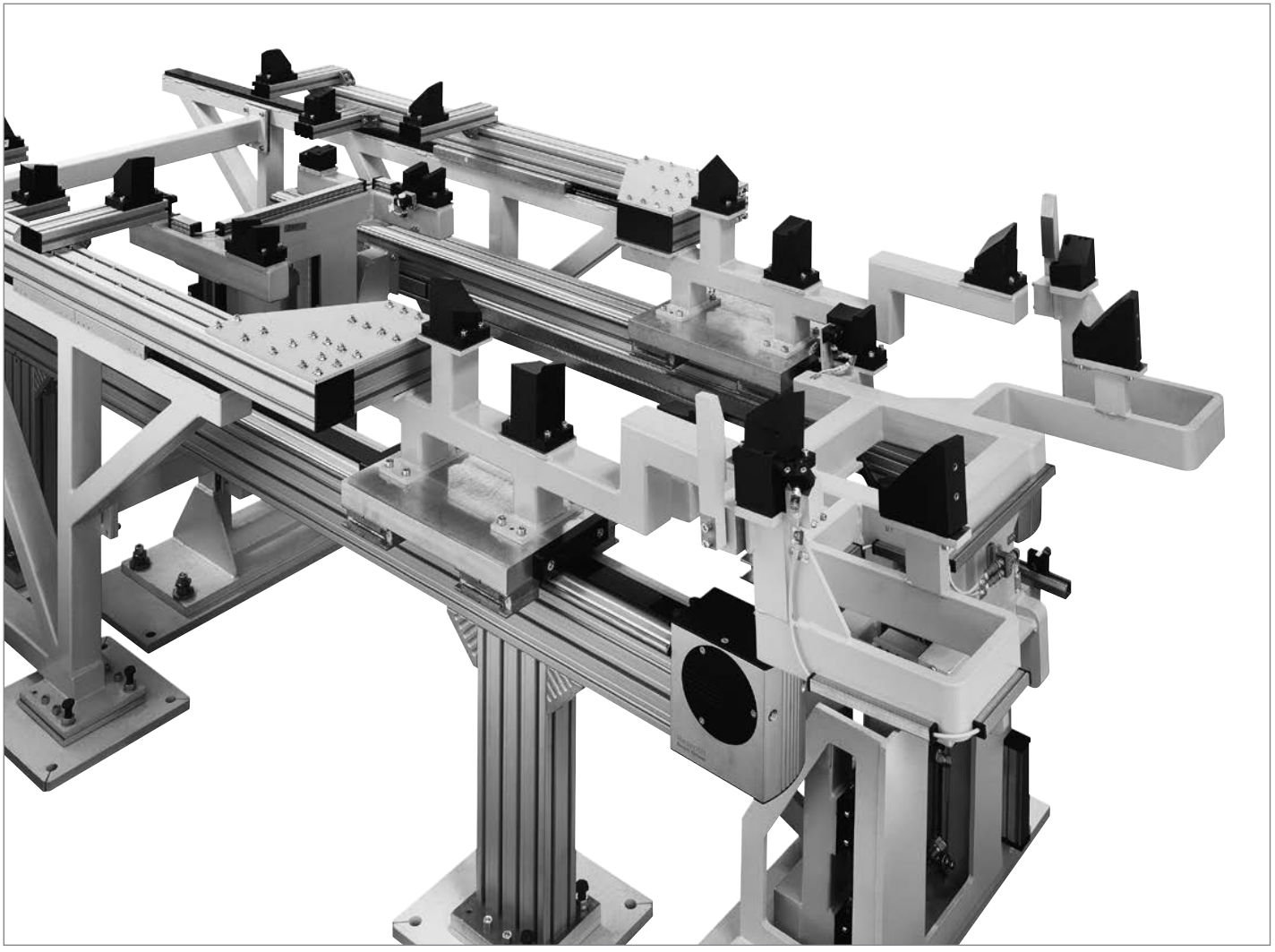

Linear guides – sizes, designs, and loads

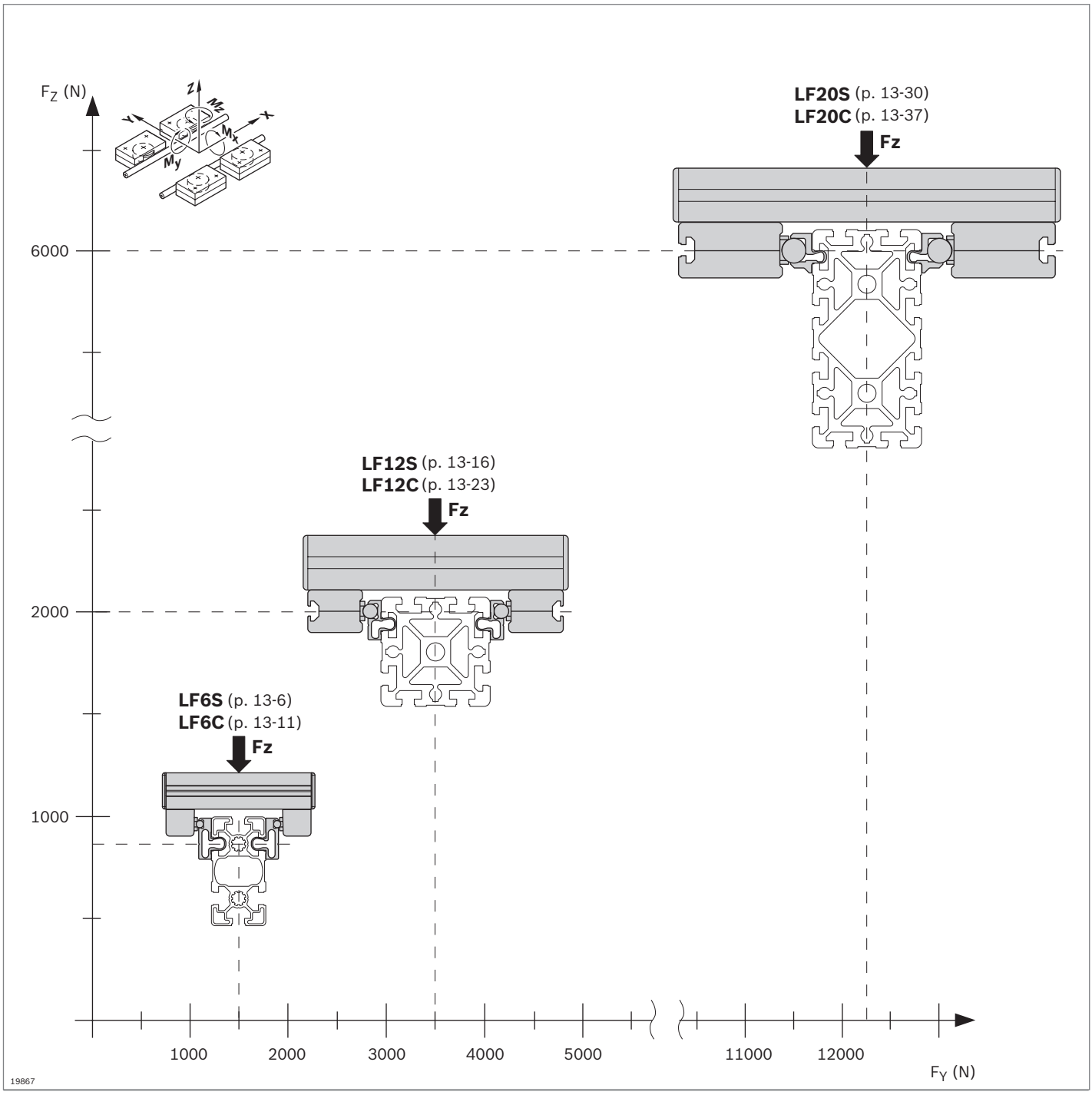

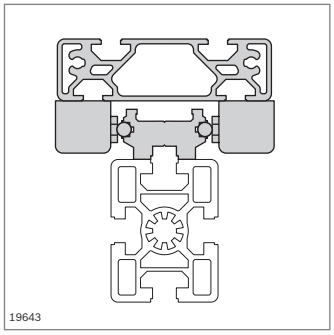

LF...S

- Compact construction
- Fixed track width
- v_{max} = 5 m/s

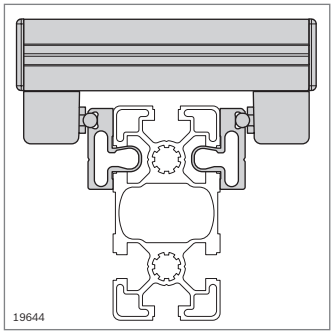

LF...C

- Freely selectable track width for greater torque absorption
- v_{max} = 5 m/s

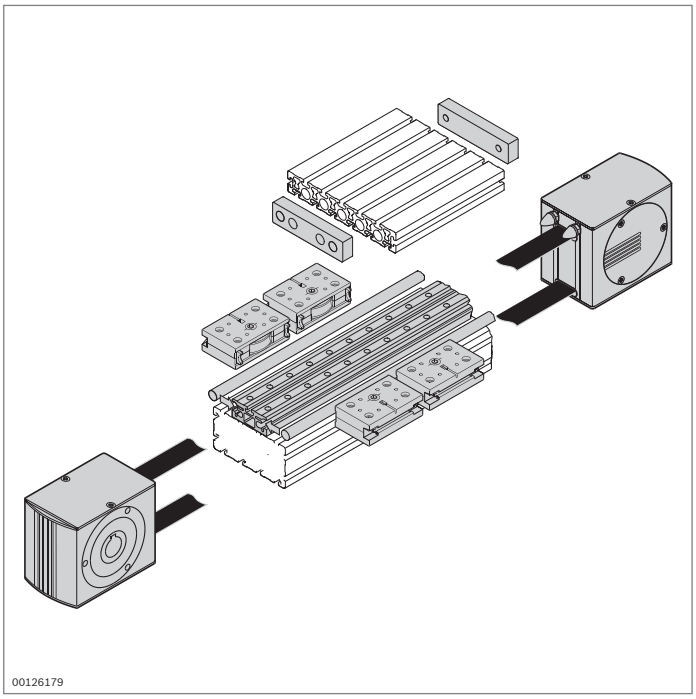

Cam roller guides LF...S

- Cam roller guide LF...S with fixed track widths
- Guide rail made of aluminum with hardened and polished VA guide rods
- Simple mounting on strut profile or directly on flat surface, e.g. on a machine
- High precision, dimensional stability and torsional rigidity
- Lighter and cheaper than steel guides
- Light trolley with good torsional rigidity
- Freely selectable trolley lengths
- Freely selectable stroke lengths possible
- High permissible speed

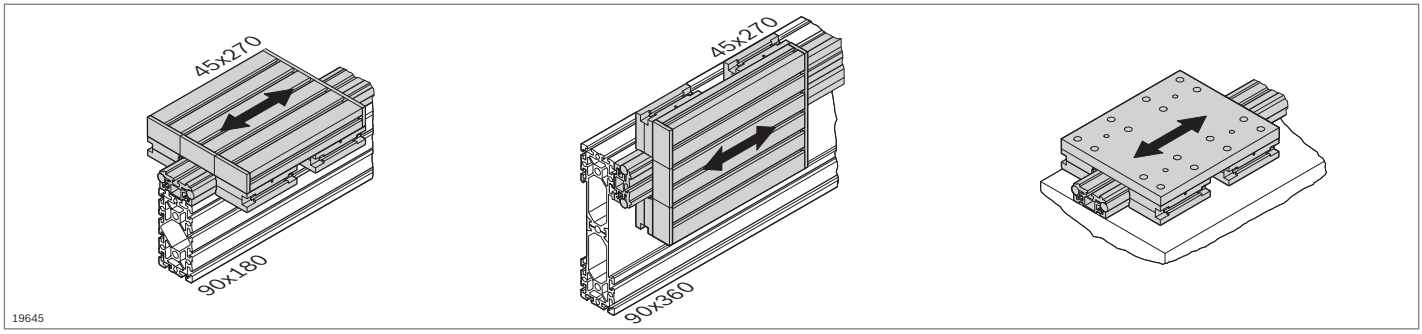

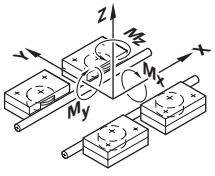

The support profiles shown here are examples

LF6S

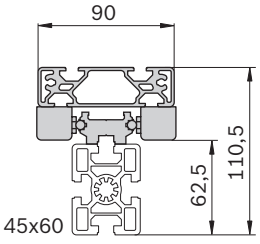

$F_{y\,max}$ = 1400 N
$F_{z\,max}$ = 850 N
$M_{x\,max}$ = 13,6 Nm
v_{max} = 5 m/s

LF12S

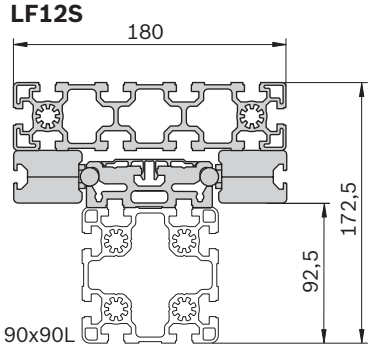

$F_{y\,max}$ = 3500 N
$F_{z\,max}$ = 2000 N
$M_{x\,max}$ = 78 Nm
v_{max} = 5 m/s

LF20S

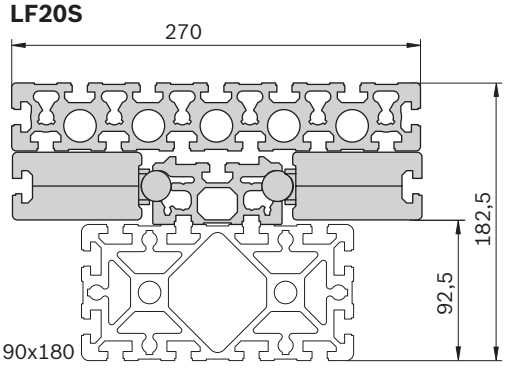

$F_{y\,max}$ = 12500 N
$F_{z\,max}$ = 6000 N
$M_{x\,max}$ = 240 Nm
v_{max} = 5 m/s

19646

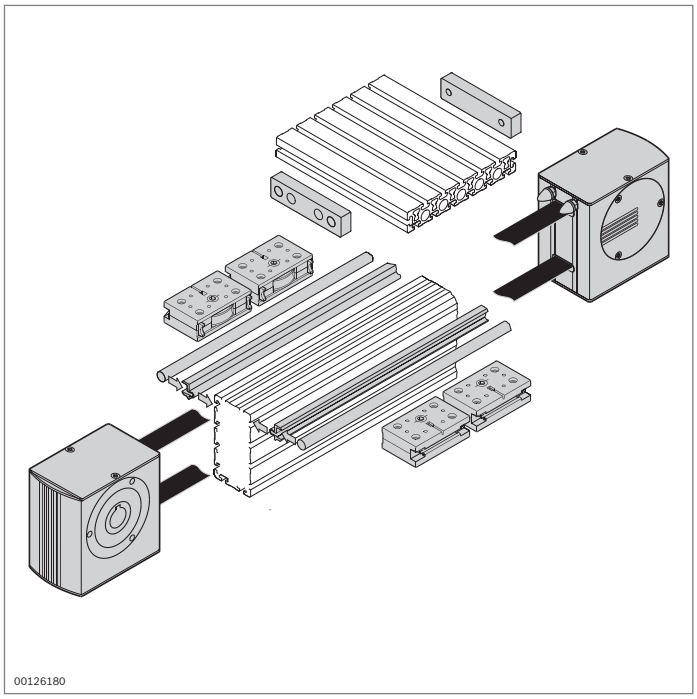

Cam roller guides LF...C

- Cam roller guide LF...C for free choice of track widths and large track widths
- Clamping profile made of aluminum with hardened and polished VA guide rods
- Easy assembly through clipping the clamping profile into the slots of any Rexroth profile with 10 mm slot
- Optimally adjustable to different loads
- Greater torque absorption due to a C construction and free choice of track width
- Light trolley with good torsional rigidity
- Freely selectable trolley lengths and widths
- Freely selectable stroke lengths possible
- High permissible speed

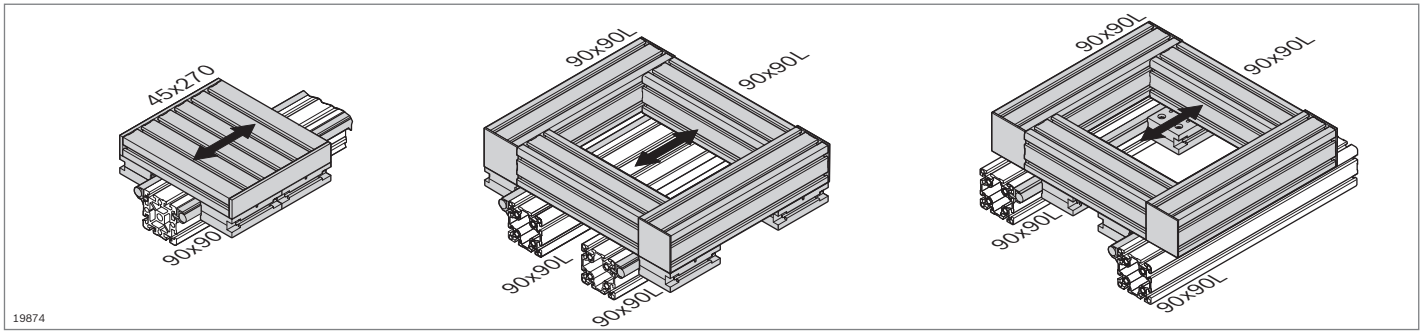

The support profiles shown here are examples

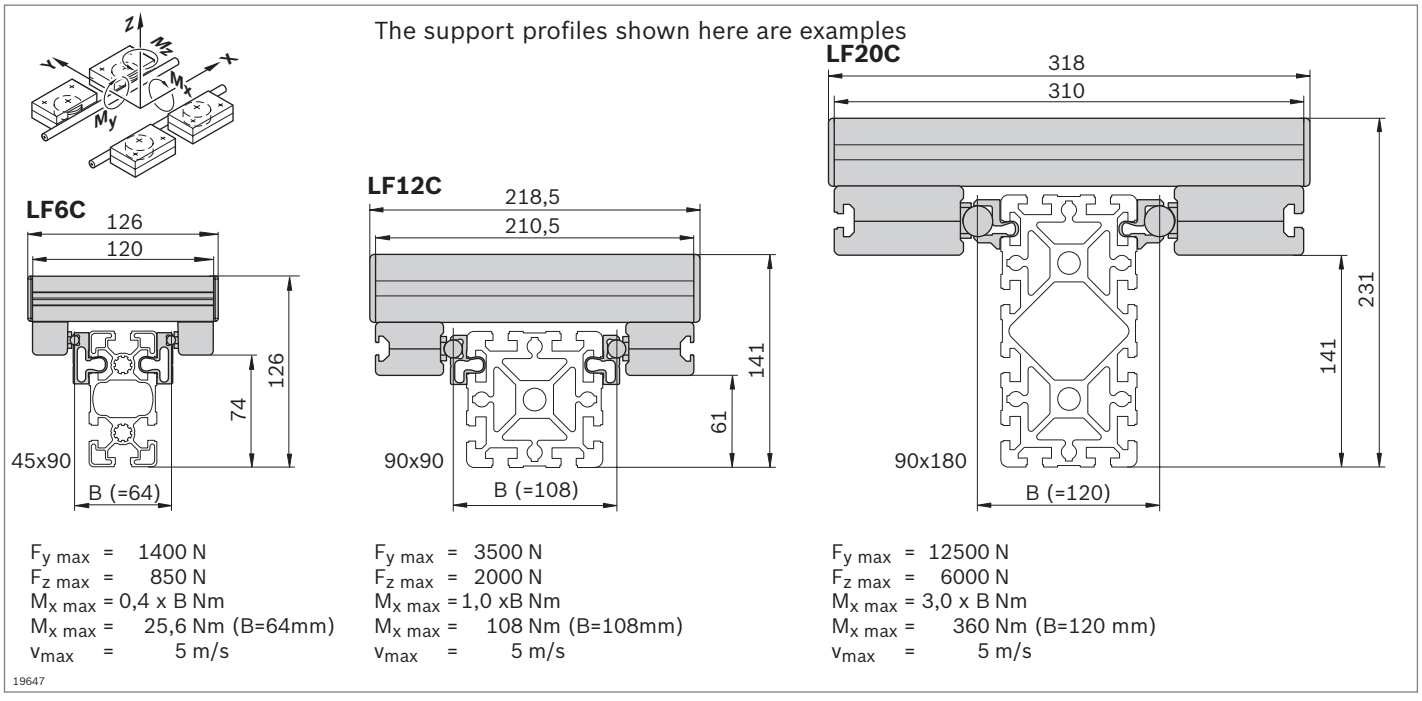

$F_{y\,max}$ = 1400 N
$F_{z\,max}$ = 850 N
$M_{x\,max}$ = 0,4 x B Nm
$M_{x\,max}$ = 25,6 Nm (B=64mm)
v_{max} = 5 m/s

$F_{y\,max}$ = 3500 N
$F_{z\,max}$ = 2000 N
$M_{x\,max}$ = 1,0 xB Nm
$M_{x\,max}$ = 108 Nm (B=108mm)
v_{max} = 5 m/s

$F_{y\,max}$ = 12500 N
$F_{z\,max}$ = 6000 N
$M_{x\,max}$ = 3,0 x B Nm
$M_{x\,max}$ = 360 Nm (B=120 mm)
v_{max} = 5 m/s

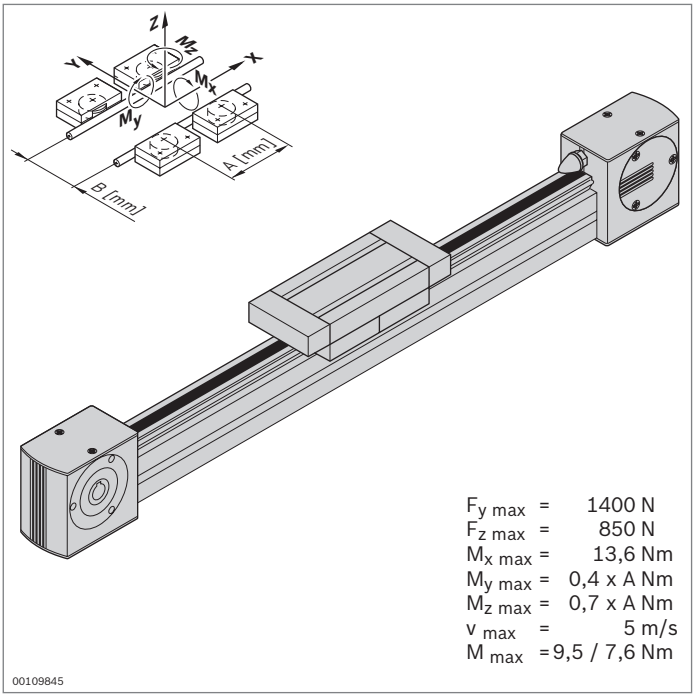

Cam roller guide LF6S – complete axis



- Fully assembled cam roller guide
- Stroke and trolley length can be individually selected
- Rail profile screwed onto strut profile 45x60
- Incl. toothed belt drive; additional notes on the drive concept (p. 13-44)

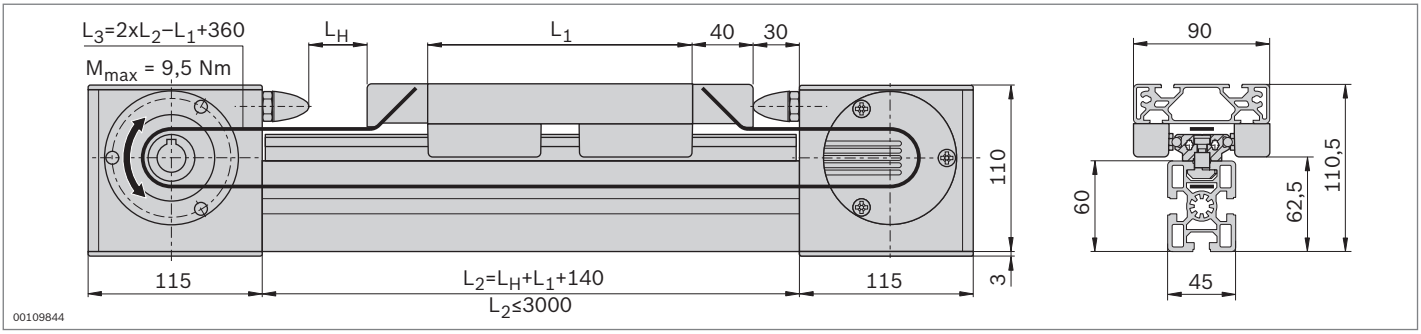

Technical data

See pages 13-57 for notes on layout and drive

Complete axis LF6S	L_H / L_1 (mm)	No.
	L_1+80 ≤ L_H ≤ 2710 150 ≤ L_1 ≤ 1000	**3 842 998 495 / L_H / L_1**

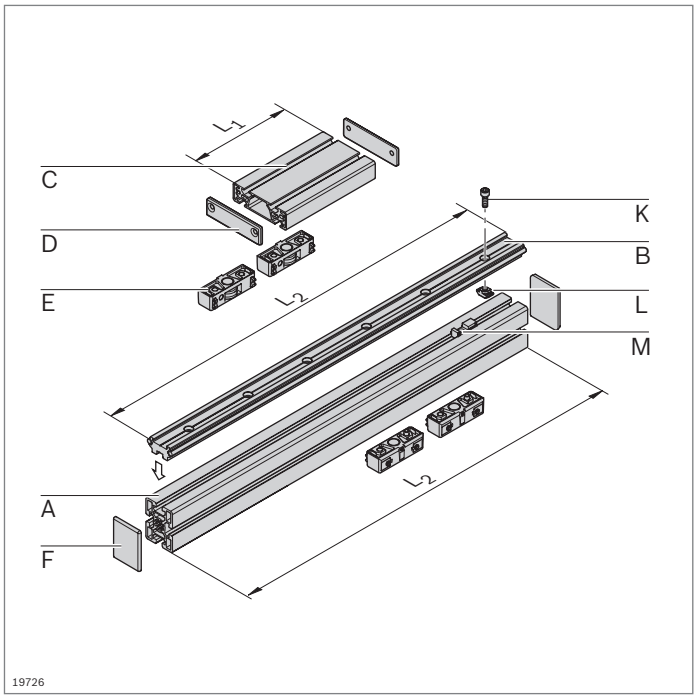

Cam roller guide LF6S – components

- Components for the individual assembly of cam roller guides, with or without drive

Parts list for cam roller guide LF6S without drive

Component		No.	Pcs	Page
A	Profile 45x60	**3 842 990 570 / L_2**	1	2-40
B	Guide profile LF6S	**3 842 993 966 / L_2**	1	13-8
C	Trolley profile LF6S	**3 842 993 061 / L_1**	1	13-8
D	Cover cap LF6S	**3 842 535 645**	2	13-9
E	Guide bearing LF6	**3 842 535 662**	4	13-8
F	Cover cap 45x60	**3 842 548 755**	2	2-40
K	Cylinder bolt M6x20 – DIN 7984		n[1)]	
L	T-nut M6, 10 mm slot	**3 842 530 285**	n[1)]	3-4
M	Sliding block	**3 842 146 877**	n[1)]	13-8

[1)] For identification see page 13-8

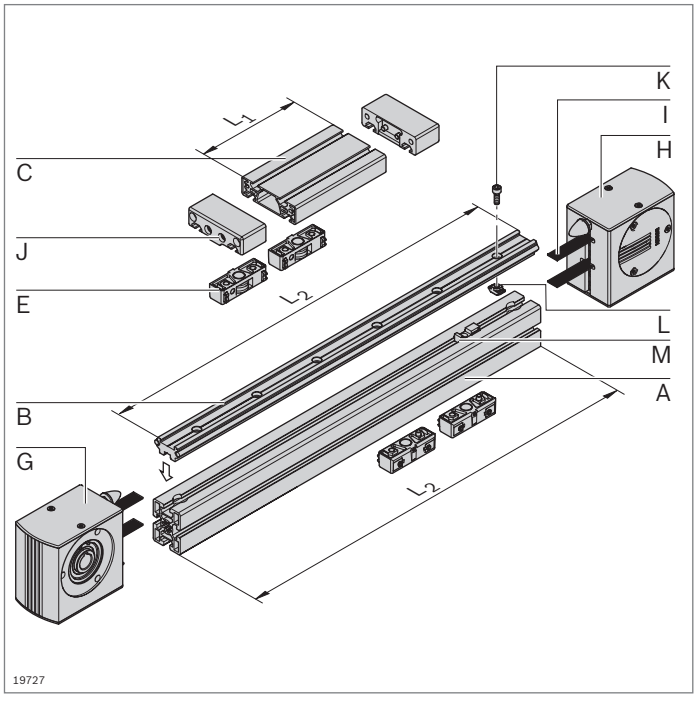

Parts list for cam roller guide LF6S with drive

Component		No.	Pcs	Page
A	Profile 45x60 LF LF	**3 842 993 085 / L_2**	1	2-40
B	Guide profile LF6S	**3 842 993 966 / L_2**	1	13-8
C	Trolley profile LF6S	**3 842 993 061 / L_1**	1	13-8
E	Guide bearing LF6	**3 842 535 662**	4	13-8
G	Drive head LF6S	**3 842 526 410**	1	13-9
H	Return head LF6S	**3 842 526 411**	1	13-10
I	Toothed belt LF6S	**3 842 994 659 / L_3[1)]**	1	13-10
J	Belt connector LF6S	**3 842 535 682**	2	13-10
K	Cylinder bolt M6x20 – DIN 7984		n[2)]	
L	T-nut M6, 10 mm slot	**3 842 530 285**	n[2)]	3-4
M	Sliding block	**3 842 146 877**	n[2)]	13-8

[1)] $L_3 = 2xL_2 - L_1 + 360$

[2)] For identification see page 13-8

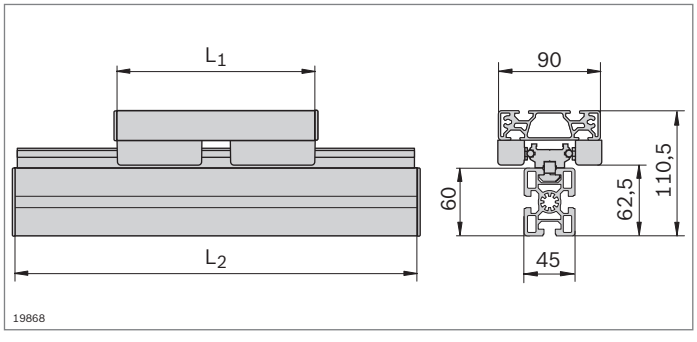

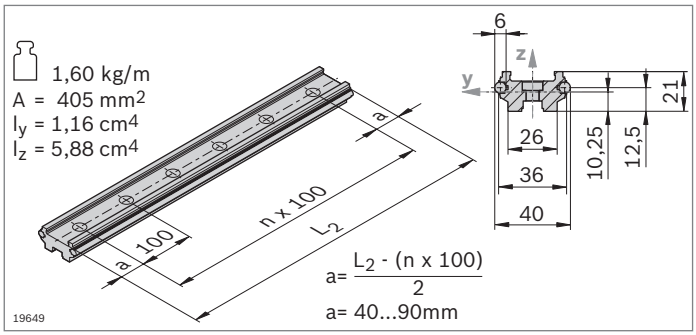

- Guide profile LF6S with integrated guide rods
- Installation on MGE strut profiles with 10 mm slot or directly on a flat surface

Guide profile		L_2 (mm)	No.
LF6S	1 pc	150 ... 3000	**3 842 993 966 / L_2**
	10 pcs	3000	**3 842 539 412**
Material:	Guide profile: Aluminum; anodized Guide rod: Solid shaft VA, induction hardened, polished		
Condition on delivery:	Ungreased guide rods; greasing according to assembly instructions **3 842 527 226**		
Required accessories:	Cylinder bolt DIN 7984 – M6x20 T-nut M6, 10 mm slot **3 842 530 285** (p. 3-4)		

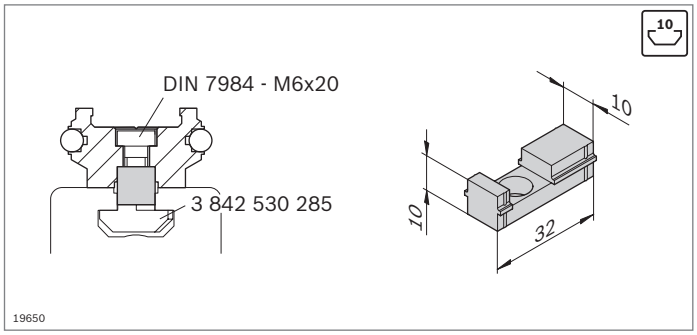

- Sliding block as a centering aid for mounting the guide profile in a 10 mm profile slot

Sliding block		No.
	50	**3 842 146 877**
Material:	PA; black	

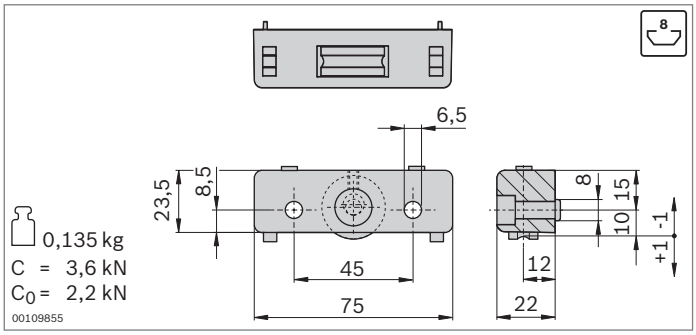

- Guide bearing for trolley construction
- Guiding via guide rod
- Cam rollers with ball bearings, permanently lubricated
- Lubricating felts with guide rod lubrication reservoir
- Play-free cam roller adjustment via eccentric bolts

Guide bearing		No.	FS
LF6	2	**3 842 535 662**	2xFS1
Material:	Housing: Diecast aluminum Cam roller: Steel, hardened, polished		
Scope of delivery:	Incl. fastening material (FS)		
Condition on delivery:	Lubricating felts ungreased; greasing according to assembly instructions **3 842 527 226**		

FS1

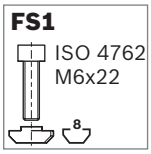

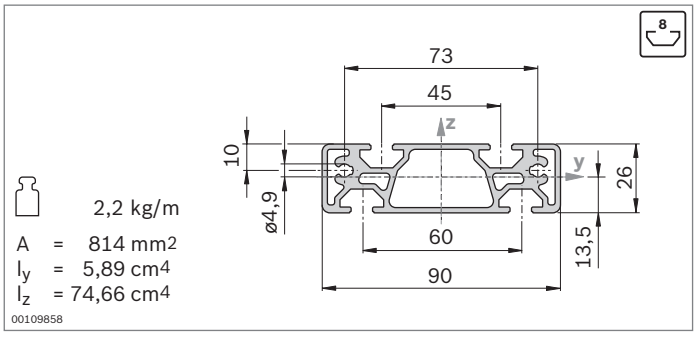

- Trolley profile for the construction of trolley LF6S

Trolley profile	L_1 (mm)	No.
LF6S	150 ... 3000	**3 842 993 061 / L_1**
Material:	Aluminum; anodized	

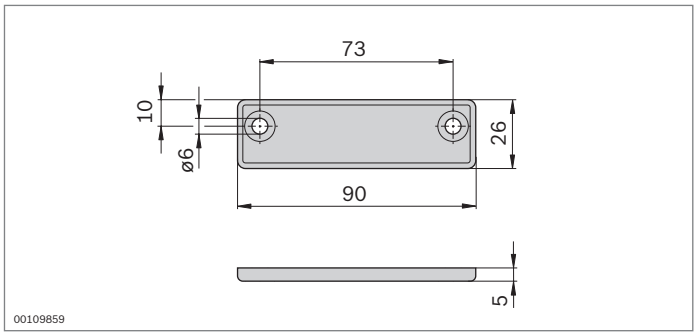

- Cover cap for trolley profile LF6S
- For use on trolleys which are not driven by a toothed belt

Cover cap		No.	FS
LF6S	2	**3 842 535 645**	2xFS2
Material:	PA; black		

FS2

ISO 7050
5,5x19

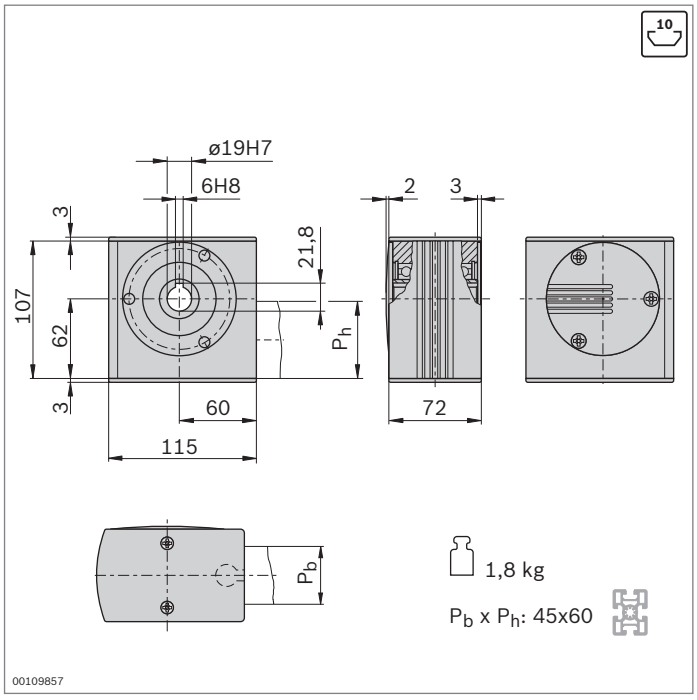

- Drive head for transferring drive torque to a toothed belt
- For direct mounting of a motor or (in conjunction with a plug-in shaft) for mounting a hollow shaft gear or a coupling (p. 13-46)
- Mounted with longitudinal end connector directly on profile 45x60
- Profile finishing: LF blind hole drilling for longitudinal end connector

Drive head	No.	FS
LF6S	**3 842 526 410**	2xFS3, FS4
Material:	Aluminum; anodized Hollow shaft: Steel; galvanized Cover caps: PA; black	
Scope of delivery:	Incl. Fastening material (FS), cover caps	

FS3

ISO 7380
M8x40

FS4

DIN 439
M8

13

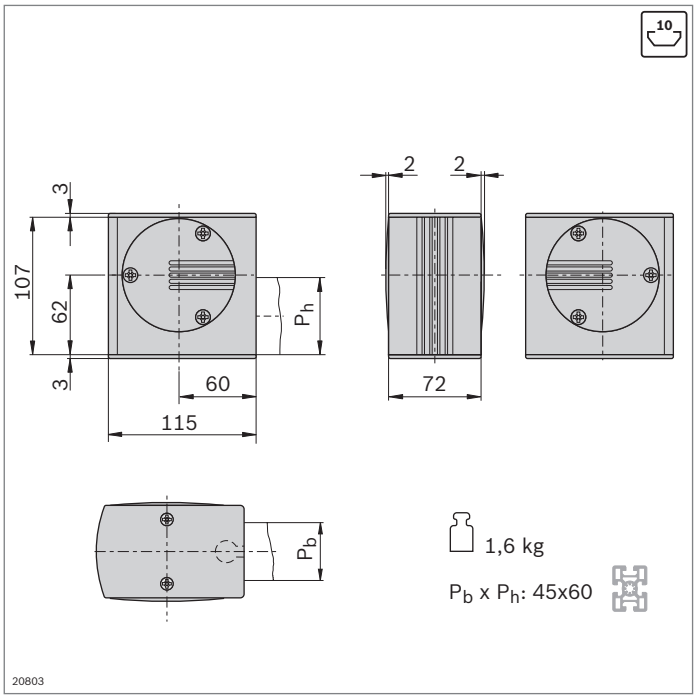

- Return head for tensioning the toothed belt and changing its direction
- Mounted directly on profile using longitudinal end connector
- Profile finishing: LF blind hole drilling for longitudinal end connector

Return head	No.	FS
LF6S	**3 842 526 411**	2xFS3, FS4

Material:	Aluminum; anodized Hollow shaft: Steel; galvanized Cover caps: PA; black
Scope of delivery:	Incl. Fastening material (FS), cover caps

FS3
ISO 7380
M8x40

FS4
DIN 439
M8

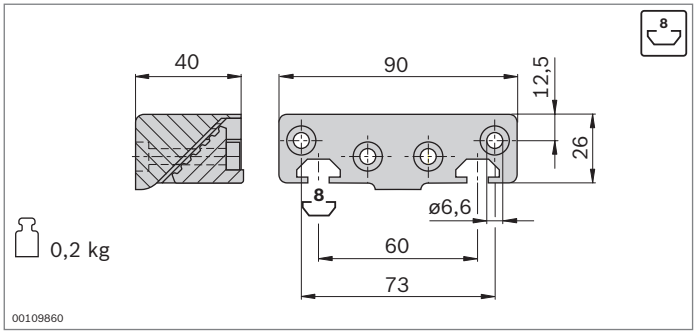

- Belt connector for fixing the toothed belt on the front of the trolley
- All connecting parts for mounting on the trolley profile LF6S are included

Belt connector		No.	FS
LF6S	2	**3 842 535 682**	2xFS5, 2xFS6

Material:	Aluminum, painted black
Scope of delivery:	Incl. fastening material (FS)

FS5
DIN 7984
M6x35
6-FSt
ISO 4032–M6

FS6
DIN 7500
M6x50
6-FSt

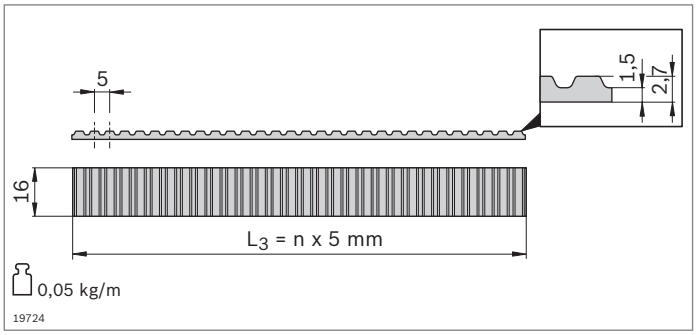

- Toothed belt as a trolley drive
- Pitch: AT5

Toothed belt	L_3 (mm)	No.
LF6S	300 ... 50000	**3 842 994 659 / L_3 [1)]**
	50000	**3 842 513 646**

[1)] $L_3 = 2xL_2 - L_1 + 360$

Material: PU with embedded steel wires

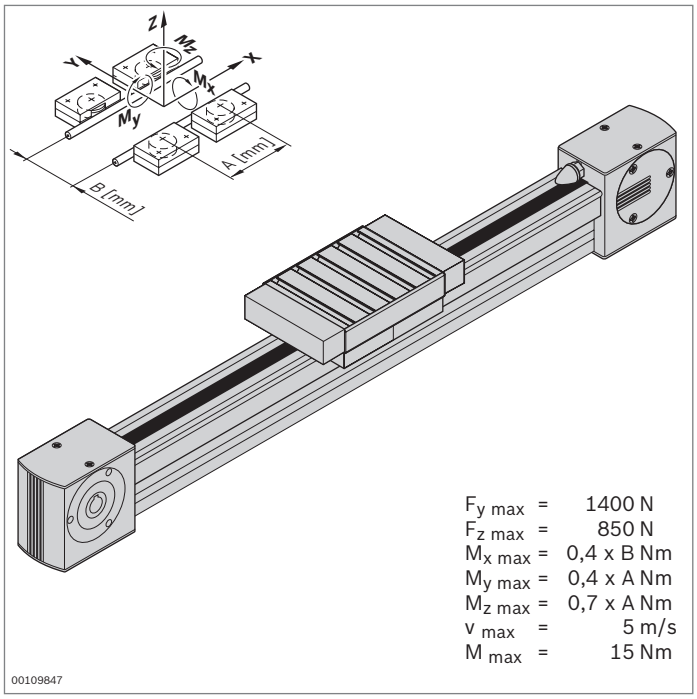

Cam roller guide LF6C – complete axis



- Fully assembled cam roller guide
- Stroke can be individually selected
- Clamping profile clipped into strut profile 45x90L
- Incl. toothed belt drive; additional notes on the drive concept (p. 13-44)

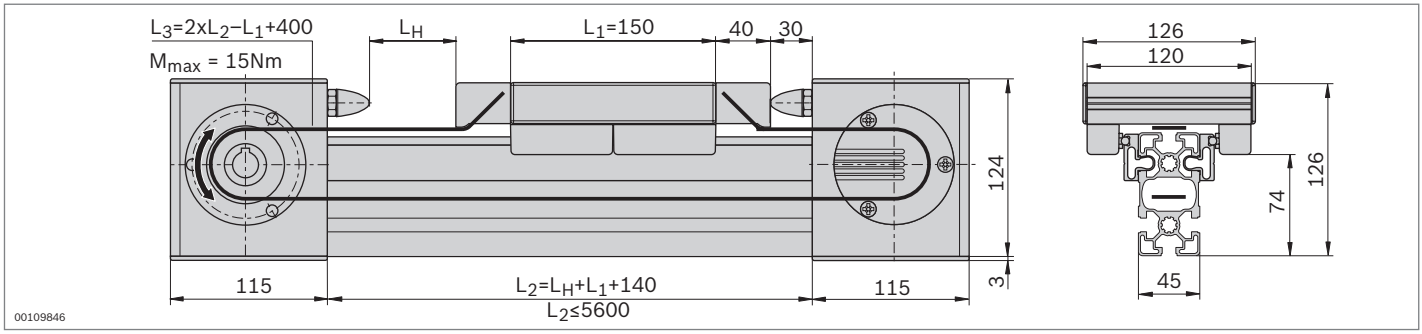

Technical data

For notes on layout and drive, see page 13-50

Complete axis	L_H (mm)	No.
LF6C	50 ... 5310	**3 842 998 496 / L_H**

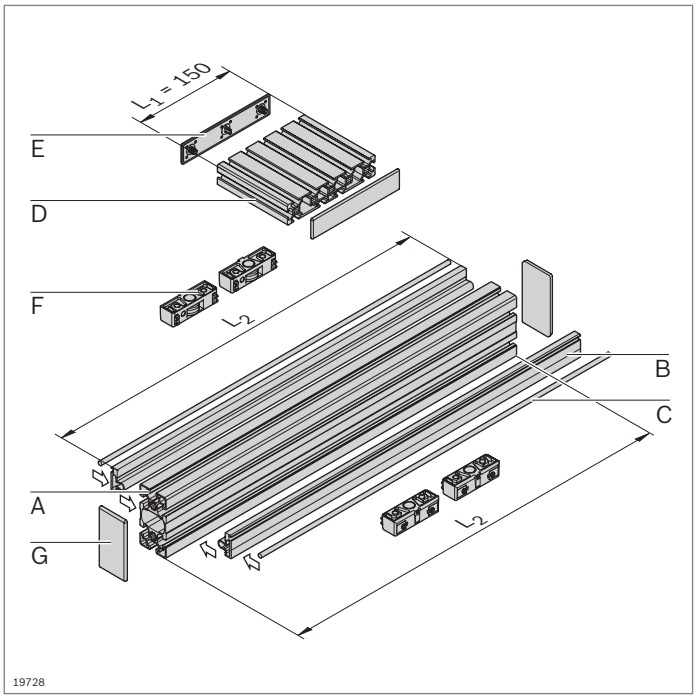

Cam roller guide LF6C – components

- Components for the individual assembly of cam roller guides, with or without drive

Parts list for cam roller guide LF6C without drive

Component		No.	Pcs	Page
A	Profile 45x90L	**3 842 992 432 / L_2**	1	2-41
B	Clamping profile LF6C	**3 842 992 925 / L_2**	2	13-13
C	Guide rod LF6	**3 842 993 967 / L_2**	2	13-13
D	Trolley profile LF6C	**3 842 993 952 / 120 mm**	1	13-13
E	Cover cap LF6C	**3 842 539 120**	2	13-14
F	Guide bearing LF6	**3 842 535 662**	4	13-13
G	Cover cap 45x90	**3 842 548 757**	2	2-41

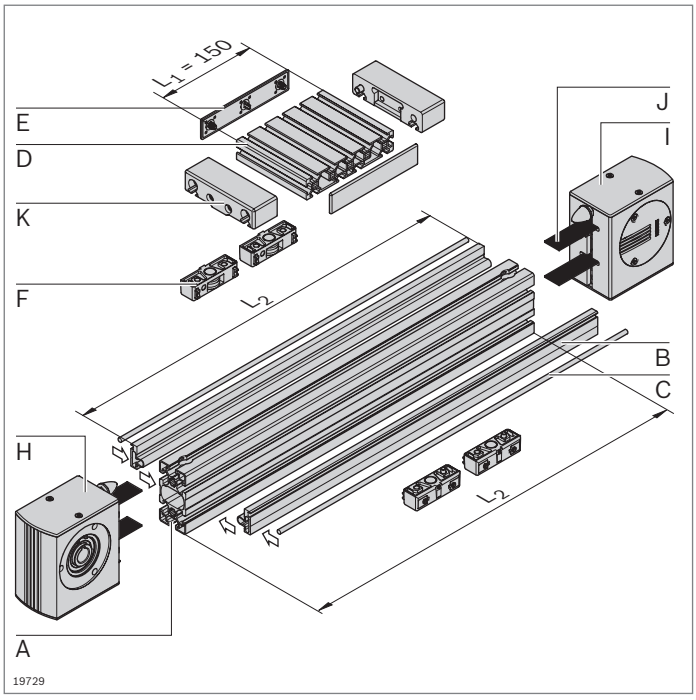

Parts list for cam roller guide LF6C with drive

Component		No.	Pcs	Page
A	Profile 45x90L LF LF	**3 842 993 084 / L_2**	1	2-41
B	Clamping profile LF6C	**3 842 992 925 / L_2**	2	13-13
C	Guide rod LF	**3 842 993 967 / L_2**	2	13-13
D	Trolley profile LF6C	**3 842 993 952 / 120 mm**	1	13-13
E	Cover cap LF6C	**3 842 539 120**	2	13-14
F	Guide bearing LF6	**3 842 535 662**	4	13-13
H	Drive head LF6C	**3 842 526 416**	1	13-14
I	Return head LF6C	**3 842 526 417**	1	13-15
J	Toothed belt LF6C	**3 842 994 711 / L_3**[1)]	1	13-15
K	Belt connector LF6C	**3 842 535 681**	2	13-15

[1)] $L_3 = 2xL_2 - L_1 + 400$

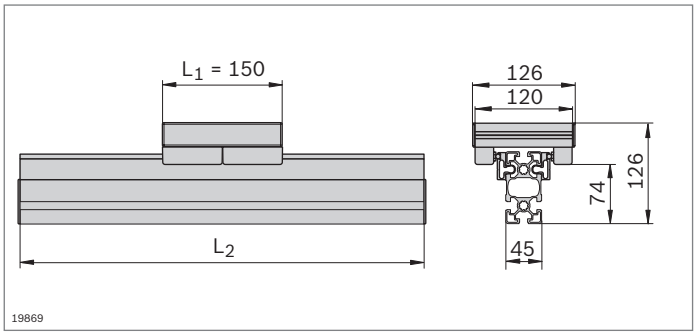

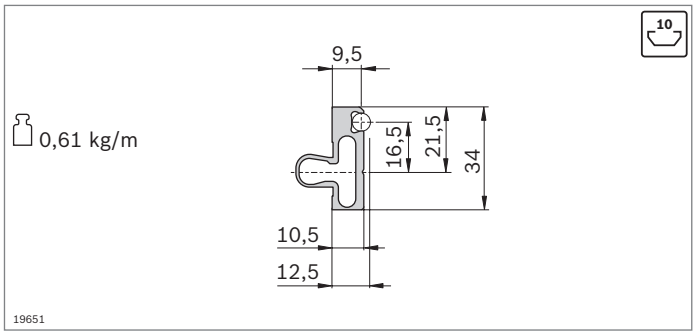

- The clamping profile is clipped into any 10 mm slot of the strut profile and it holds the guide rods

Clamping profile		L_2 (mm)	No.
LF6C	1 pc	150 ... 3000	**3 842 992 925 / L_2**
	20 pcs	3000	**3 842 518 896**
Material:	Aluminum; anodized		

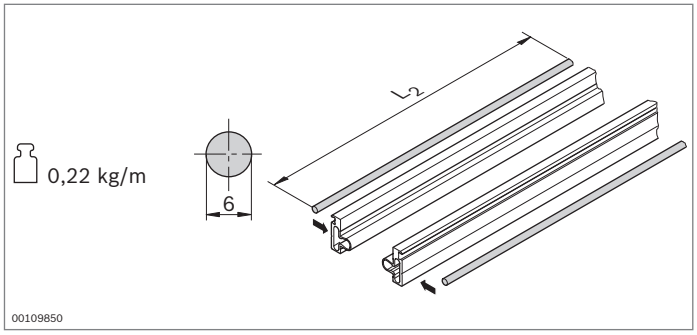

- The guide rod is pressed into the clamping profile
- The guide rod guides the guide bearing

Guide rod	L_2 (mm)		No.
LF6	150 ... 3000	1	**3 842 993 967 / L_2**
	3000	20	**3 842 539 414**
Material:	Solid shaft VA, induction hardened, polished		
Condition on delivery:	Ungreased; greasing according to assembly instructions **3 842 527 226**		

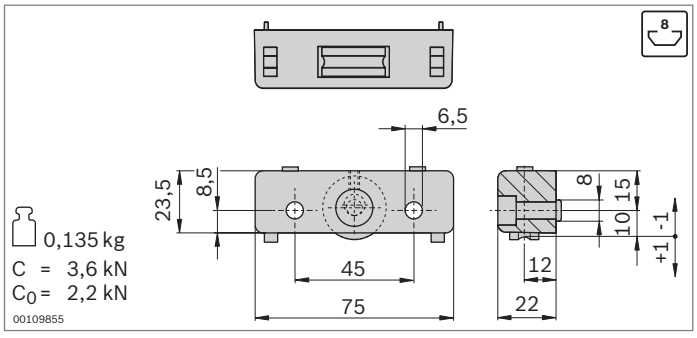

- Guide bearing for trolley construction
- Guiding via guide rod
- Cam rollers with ball bearings, permanently lubricated
- Lubricating felts with guide rod lubrication reservoir
- Play-free cam roller adjustment via eccentric bolts

Guide bearing		No.	FS
LF6	2	**3 842 535 662**	2xFS1
Material:	Housing: Diecast aluminum Cam roller: Steel, hardened, polished		
Scope of delivery:	Incl. fastening material (FS)		
Condition on delivery:	Lubricating felts ungreased; greasing according to assembly instructions **3 842 527 226**		

FS1

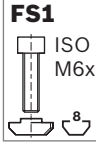

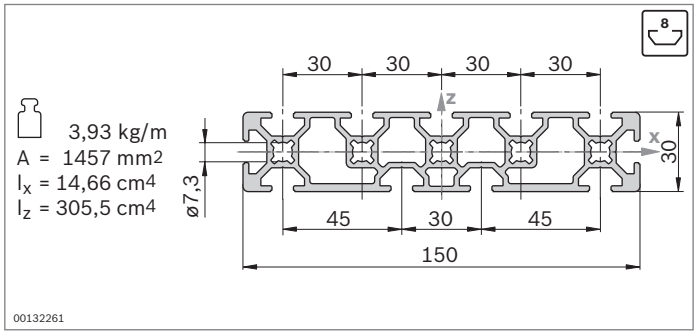

- Trolley profile for the construction of trolley LF6C

Trolley profile	L (mm)	No.
LF6C	150 ... 3000	**3 842 993 952 / L**
Material:	Aluminum; anodized	

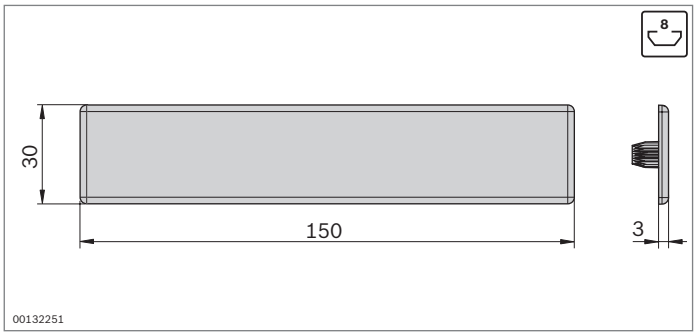

- Cover cap for trolley profile LF6C
- For use on trolleys which are not driven by a toothed belt

Cover cap		No.
LF6C	2	**3 842 539 120**
Material:	PA; black	

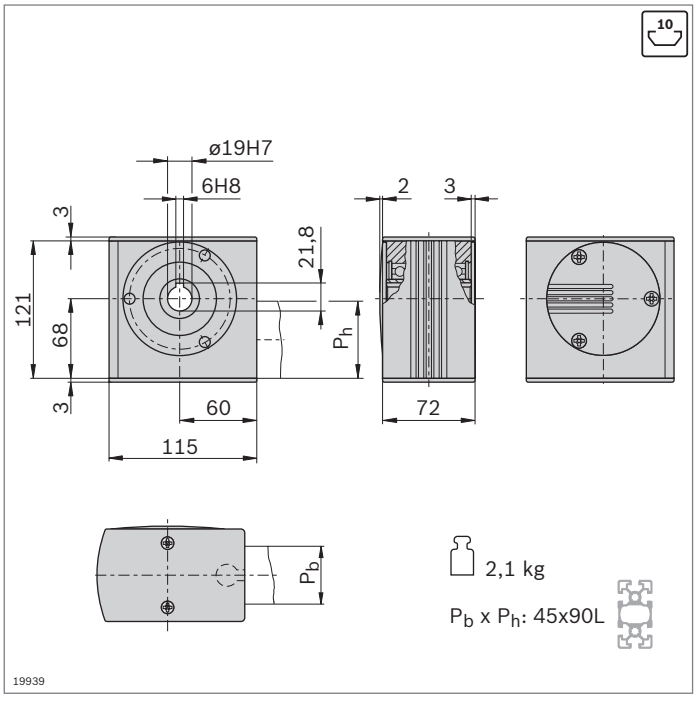

- Drive head for transferring drive torque to a toothed belt
- For direct mounting of a motor or (in conjunction with a plug-in shaft) for mounting a hollow shaft gear or a coupling (p. 13-46)
- Mounted directly on profile 45x90L using longitudinal end connector
- Profile finishing: LF blind hole drilling for longitudinal end connector

Drive head	No.	FS
LF6C	**3 842 526 416**	2xFS2, FS3
Material:	Aluminum; anodized Hollow shaft: Steel; galvanized Cover caps: PA; black	
Scope of delivery:	Incl. Fastening material (FS), cover caps	

FS2
ISO 7380
M8x40

FS3
ISO 4035
M8-04

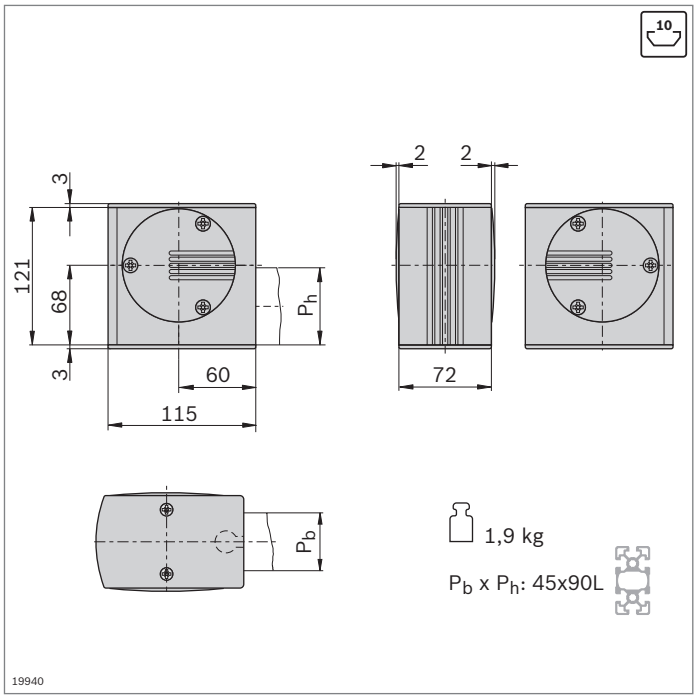

- Return head for tensioning the toothed belt and changing its direction
- Mounted directly on profile 45x90L using longitudinal end connector
- Profile finishing: LF blind hole drilling for longitudinal end connector

Return head	No.	FS
LF6C	**3 842 526 417**	2xFS2, FS3

Material:	Aluminum; anodized Hollow shaft: Steel; galvanized Cover caps: PA; black
Scope of delivery:	Incl. Fastening material (FS), cover caps

FS2
ISO 7380
M8x40

FS3
ISO 4035
M8-04

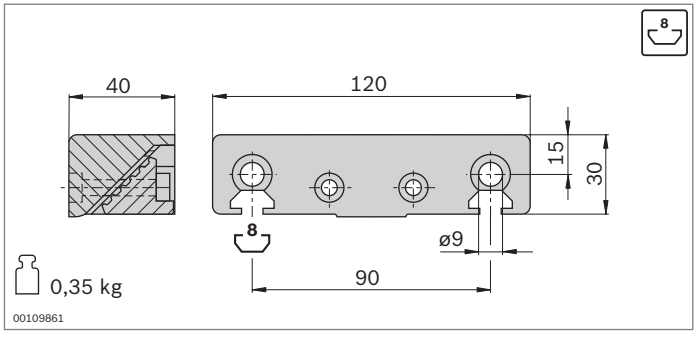

- Belt connector for fastening the toothed belt to the trolley slot
- All connecting parts for mounting on the trolley profile LF6C are included

Belt connector		No.	FS
LF6C	2	**3 842 535 681**	2xFS4, 2xFS5, 2xFS6

Material:	Aluminum, painted black
Scope of delivery:	Incl. fastening material (FS)

FS4
DIN 7984
M6x35
6-FSt
ISO 4032–M6

FS5
DIN 7984
M8x50
8-FSt
8

FS6
DIN 7984
M8x40

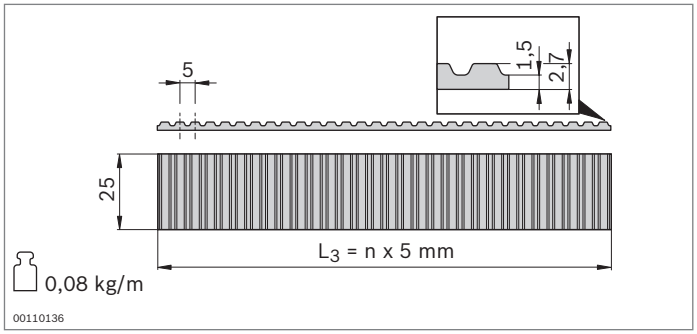

- Toothed belt as a trolley drive
- Pitch: AT5

Toothed belt	L_3 (mm)	No.
LF6C	300 ... 50000	**3 842 994 711 / L_3**[1)]
	50000	**3 842 518 856**

[1)] $L_3 = 2xL_2 - L_1 + 400$

Material: PU with embedded steel wires

13

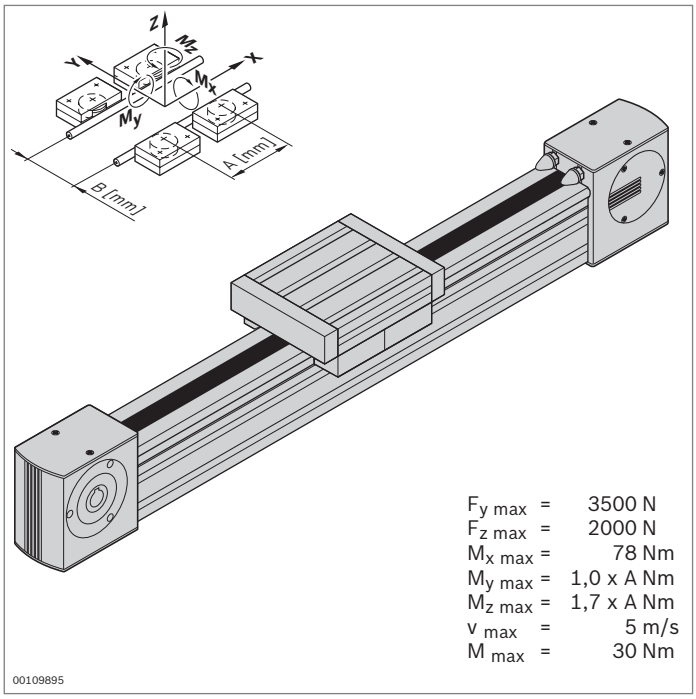

Cam roller guide LF12S – complete axis

10

- Fully assembled cam roller guide
- Stroke and trolley length can be individually selected
- Rail profile screwed onto strut profile 90x90L
- Incl. toothed belt drive; additional notes on the drive concept (p. 13-44)

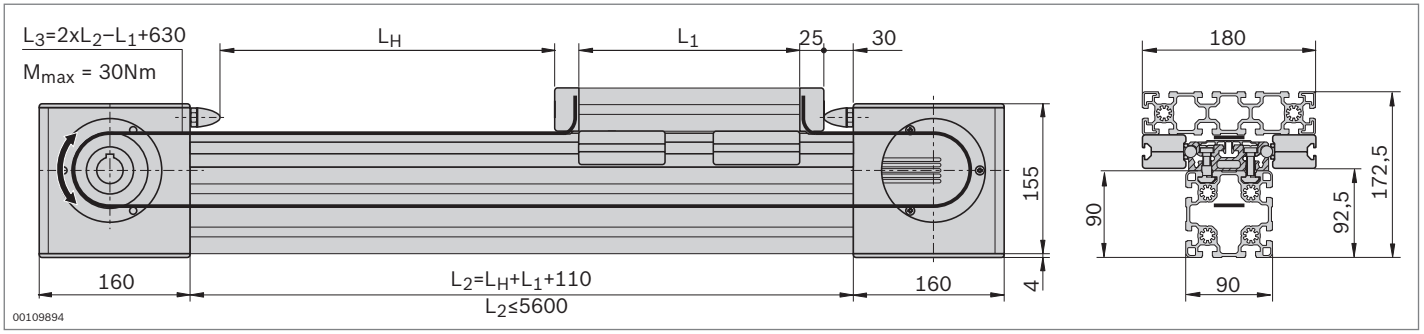

Technical data

See pages 13-57 for notes on layout and drive

Complete axis	L_H / L_1 (mm)	No.
LF12S	$L_1+50 \leq L_H \leq 5310$ $180 \leq L_1 \leq 1000$	**3 842 998 497 / L_H / L_1**

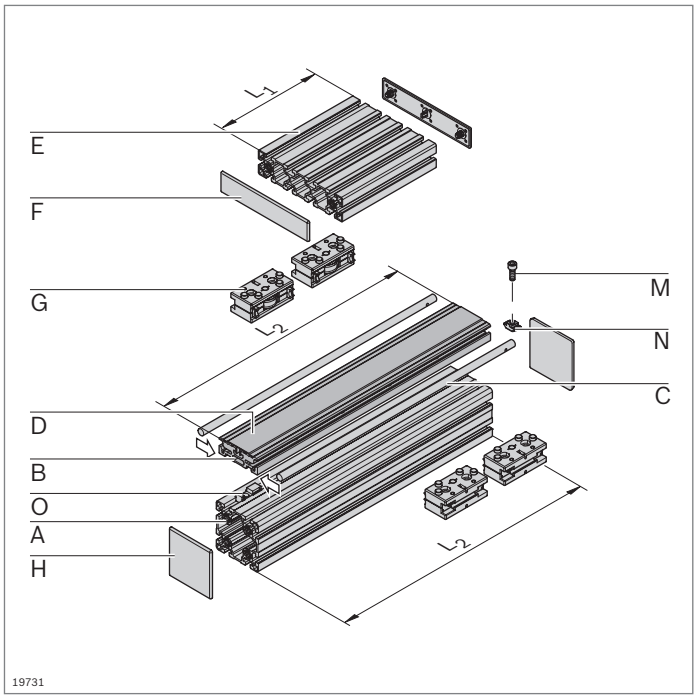

Cam roller guide LF12S – components

- Components for the individual assembly of cam roller guides, with or without drive

Parts list for cam roller guide LF12S without drive

Component		No.	Pcs	Page
A	Profile 90x90L	**3 842 992 415 / L_2**	1	2-45
B	Guide profile LF12S	**3 842 992 438 / L_2**	1	13-18
C	Guide rod LF12	**3 842 993 968 / L_2**	2	13-18
D	Cover profile LF12S	**3 842 993 062 / L_2**	1	13-18
E	Profile 45x180	**3 842 990 335 / L_1**	1	2-43
F	Cover cap 45x180	**3 842 548 795**	2	2-43
G	Guide bearing LF12	**3 842 535 664**	4	13-19
H	Cover cap 90x90L	**3 842 548 759**	2	2-45
M	Cylinder bolt DIN 7984 – M8x30		n[1)]	
N	T-nut M8, 10 mm slot	**3 842 530 287**	n[1)]	3-4
O	Sliding block	**3 842 146 877**	n[1)]	13-18

[1)] For identification see page 13-18

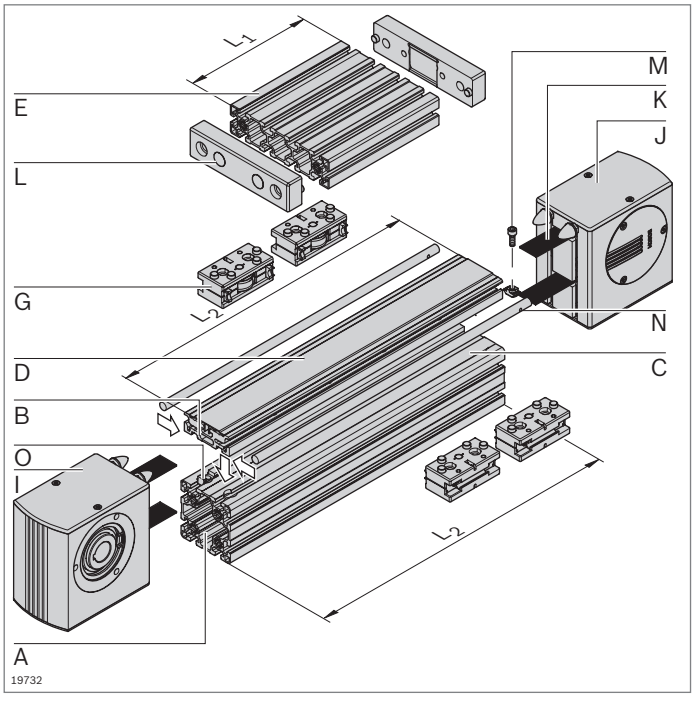

Parts list for cam roller guide LF12S with drive

Component		No.	Pcs	Page
A	Profile 90x90L LF LF	**3 842 992 418 / L_2**	1	2-45
B	Guide profile LF12S	**3 842 992 438 / L_2**	1	13-18
C	Guide rod LF12	**3 842 993 968 / L_2**	2	13-18
D	Cover profile LF12S	**3 842 993 062 / L_2**	1	13-18
E	Profile 45x180 M12 M12	**3 842 990 339 / L_1**	1	2-43
G	Guide bearing LF12	**3 842 535 664**	4	13-19
I	Drive head LF12S	**3 842 526 412**	1	13-21
J	Return head LF12S	**3 842 526 413**	1	13-21
K	Toothed belt	**3 842 994 821 / L_3[1)]**	1	13-22
L	Belt connector	**3 842 535 680**	2	13-22
M	Cylinder bolt DIN 7984 – M8x30		n[2)]	
N	T-nut M8, 10 mm slot	**3 842 530 287**	n[2)]	3-4
O	Sliding block	**3 842 146 877**	n[2)]	13-18

[1)] $L_3 = 2xL_2 - L_1 + 630$

[2)] For identification see page 13-18

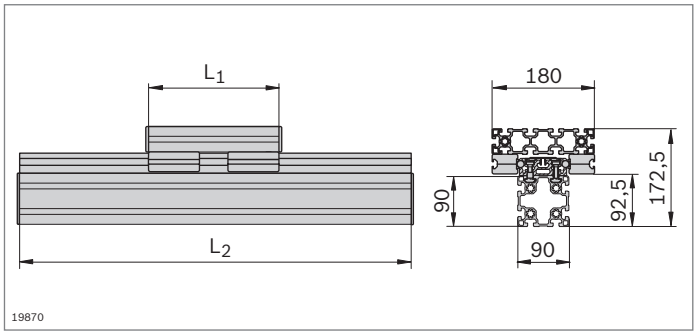

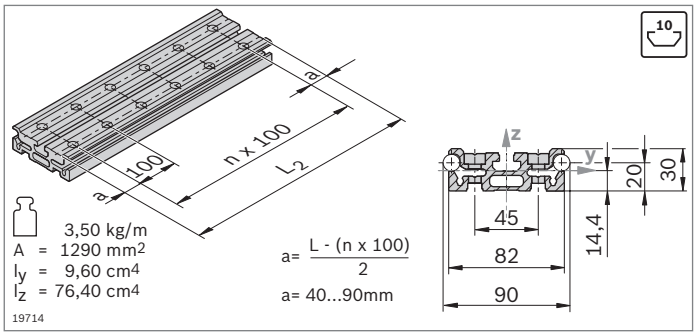

- Guide profile LF12S to hold the guide rods
- Installation on MGE strut profiles with 10 mm slot or directly on a flat surface

Guide profile		L_2 (mm)	No.
LF12S	1 pc	180 ... 6070	**3 842 992 438 / L_2**
	6 pcs	6070	**3 842 557 945**

Material: Aluminum; anodized
Accessories: Cylinder bolt DIN 7984 – M8x30
T-nut M8, 10 mm slot, **3 842 530 287**
Sliding block, cover profile, guide rod

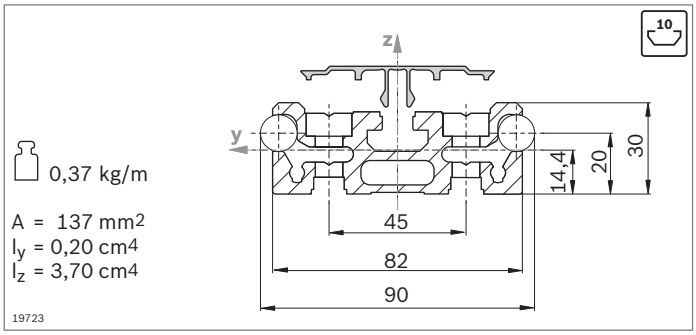

- Cover profile to prevent contamination on threaded connections

Cover profile	L_2 (mm)	No.
LF12S	150 ... 5600	**3 842 993 062 / L_2**

Material: Aluminum; anodized

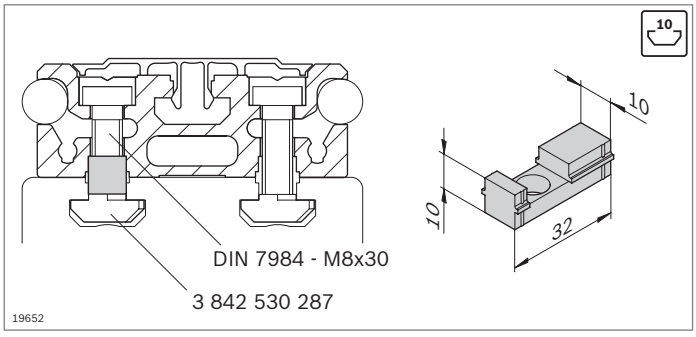

- Sliding block as a centering aid for mounting the guide profile in a 10 mm profile slot

Sliding block		No.
	50	**3 842 146 877**

Material: PA; black

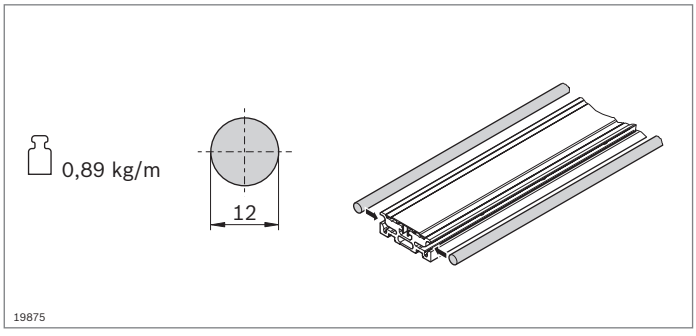

- The guide rod is pressed into the guide profile
- The guide rod guides the guide bearing

Guide rod	L_2 (mm)		No.
LF12	150 ... 2900	1	**3 842 993 968 / L_2**
	2900	20	**3 842 539 415**

Material: Solid shaft VA, induction hardened and polished
Condition on delivery: Ungreased; greasing according to assembly instructions **3 842 527 226**

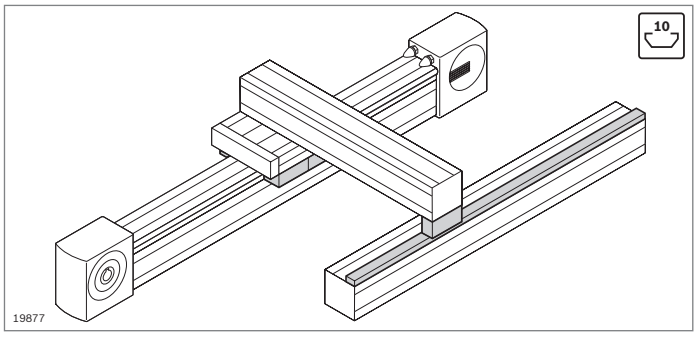

- Guide bearing for trolley construction
- Supporting bearing for brackets for bearing off-center forces
- Guide rail to hold supporting bearings (p. 13-20)

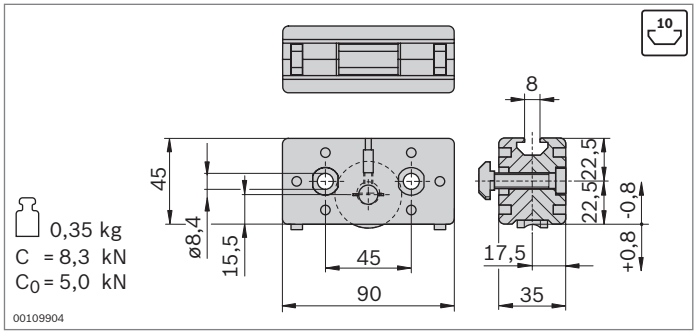

- Guide bearing for trolley construction
- Guiding via guide rod
- Cam rollers with ball bearings, permanently lubricated
- Lubricating felts with guide rod lubrication reservoir
- Play-free cam roller adjustment via eccentric bolts
- Replacement of the lubricating felts possible from rear in installed state

Guide bearing		No.	FS
LF12	2	**3 842 535 664**	2xFS1, 4xFS2

Material:	Housing: Diecast aluminum Cam roller: Steel, hardened, polished
Scope of delivery:	Incl. fastening material (FS)
Condition on delivery:	Lubricating felts ungreased; greasing according to assembly instructions **3 842 527 226**

FS1

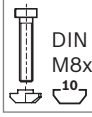

FS2

ø10xø5x11

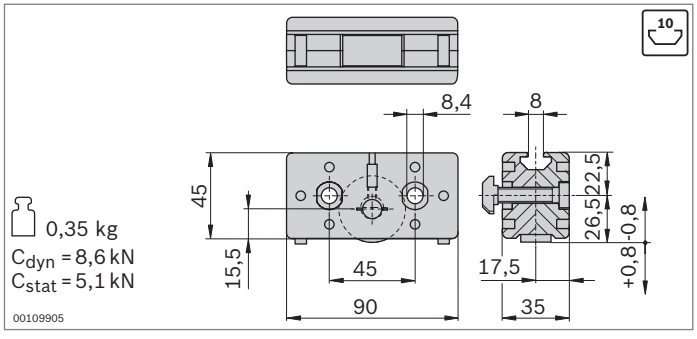

- Supporting bearing for brackets for bearing off-center forces
- For support on the guide rail
- Cam rollers with ball bearings, permanently lubricated
- Lubricating felts with guide rod lubrication reservoir
- Play-free cam roller adjustment via eccentric bolts
- Replacement of the lubricating felts possible from rear in installed state

Supporting bearing		No.	FS
LF12	2	**3 842 535 666**	2xFS3 4xFS2

Material:	Housing: Diecast aluminum Cam roller: Steel, hardened, polished
Scope of delivery:	Incl. fastening material (FS)
Condition on delivery:	Lubricating felts ungreased; greasing according to assembly instructions **3 842 527 226**

FS3



FS2

ø10xø5x11

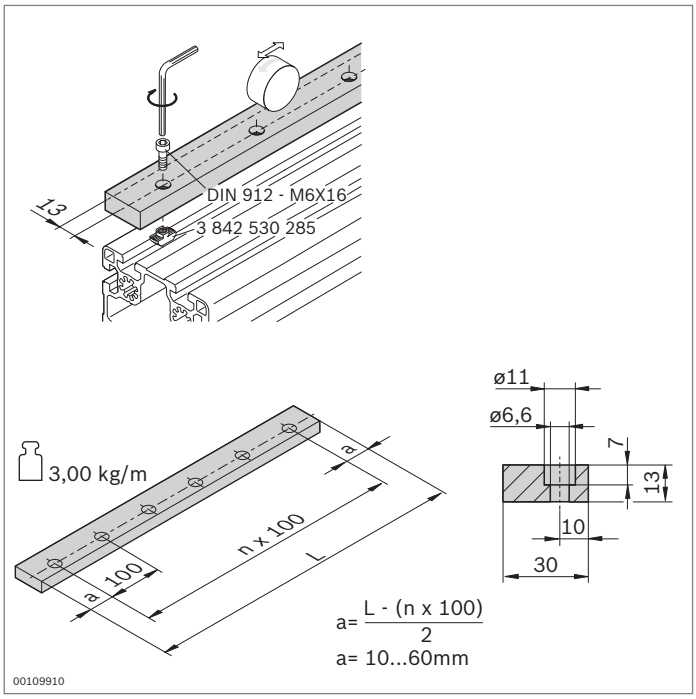

▶ Guide rail to hold supporting bearings

Guide rail	L (mm)	No.
LF12	120 ... 2000	**3 842 994 702 / L**
Material:	Steel, hardened, polished	
Condition on delivery:	Ungreased; greasing according to assembly instructions **3 842 527 226**	
Accessories:	Cylinder bolt DIN 912 – M6x16 T-nut M6, 10 mm slot (**3 842 530 285**)	

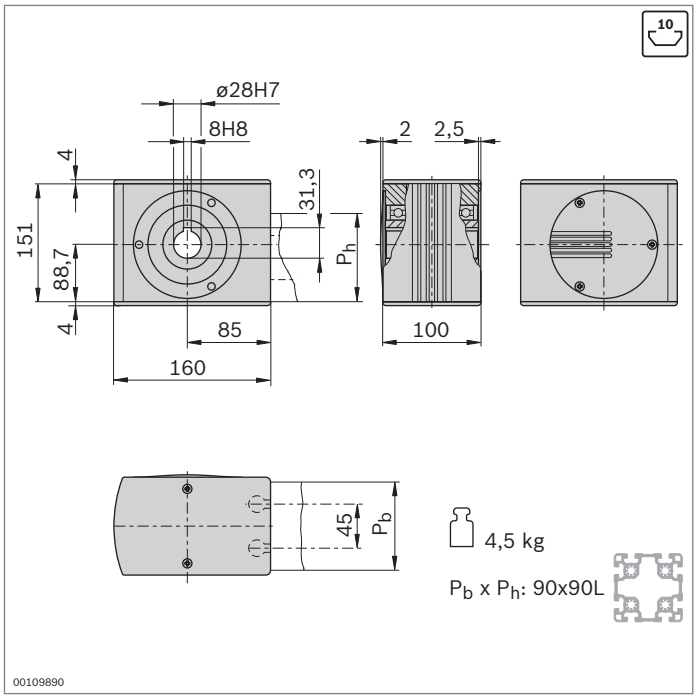

- Drive head for transferring drive torque to a toothed belt
- For direct mounting of a motor or (in conjunction with a plug-in shaft) for mounting a hollow shaft gear or a coupling (p. 13-46)
- Mounted directly on profile by using longitudinal end connector (connector included in scope of delivery)
- Profile finishing: LF blind hole drilling for longitudinal end connector

Drive head	No.	FS
LF12S	**3 842 526 412**	2xFS4, 2xFS5

Material:	Drive head: Aluminum; anodized Cover caps: PA; black Hollow shaft: Steel; galvanized
Scope of delivery:	Incl. Fastening material (FS), cover caps

FS4
ISO 7380
M8x40

FS5
ISO 4035
M8-04

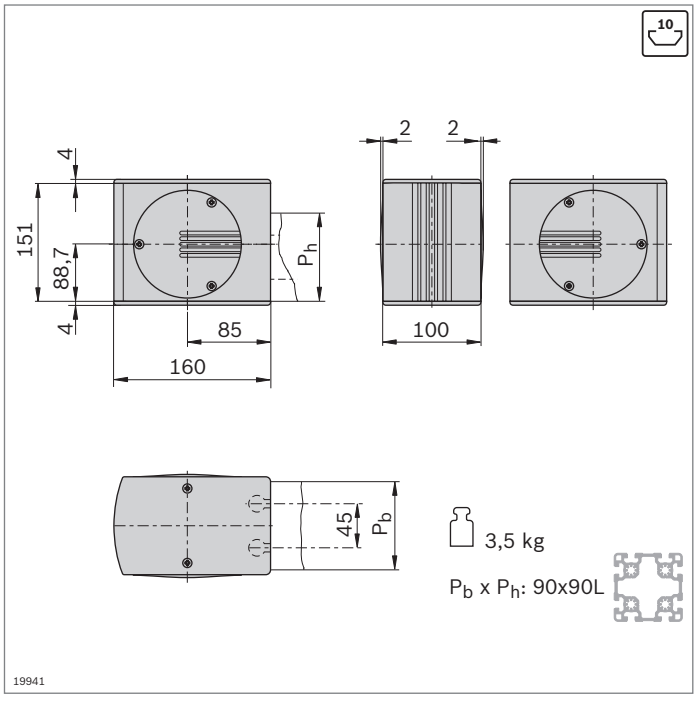

- Return head for tensioning the toothed belt and changing its direction
- Mounted directly on profile by using longitudinal end connector (connector included in scope of delivery)
- Profile finishing: LF blind hole drilling for longitudinal end connector

Return head	No.	FS
LF12S	**3 842 526 413**	2xFS4, 2xFS5

Material:	Aluminum; anodized Hollow shaft: Steel; galvanized Cover caps: PA; black
Scope of delivery:	Incl. Fastening material (FS), cover caps

FS4
ISO 7380
M8x40

FS5
ISO 4035
M8-04

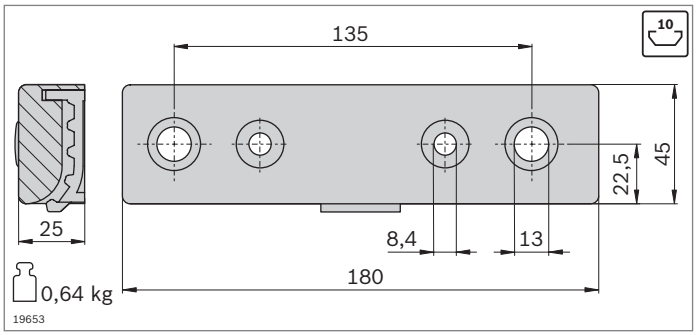

- Belt connector suitable for trolley built out of strut profiles 45x180
- All connecting parts included for mounting on the profile end (LF12S) or in the slot (LF12C)
- Profile finishing for strut profile 45x180 for trolley LF12S: M12

Belt connector		No.	FS
LF12	2	**3 842 535 680**	4xFS2, 2xFS6, 2xFS7, 2xFS8, 2xFS9

Material: Aluminum, painted black
Scope of delivery: Incl. fastening material (FS)

FS2
ø10xø5x11

FS6
DIN7984
M12x40

FS7
DIN 7984
M8x30
DIN 125
A8,4
10

FS8
DIN 7991
M8x30
10

FS9
ø18x7

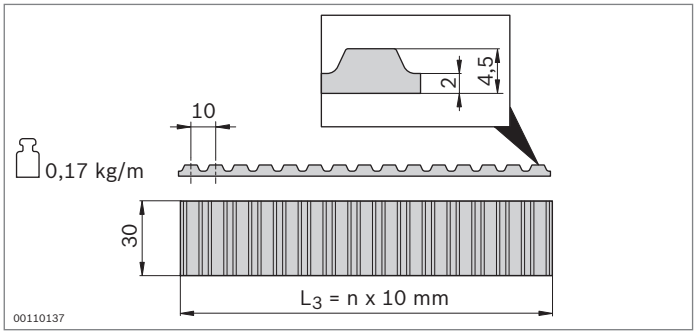

- Toothed belt as a trolley drive
- Pitch: AT10

Toothed belt	L_3 (mm)	No.
LF12	300 ... 50000	**3 842 994 821 / L_3** [1]
	50000	**3 842 526 422**

[1] $L_3 = 2xL_2 - L_1 + 630$
Material: PU with embedded steel wires

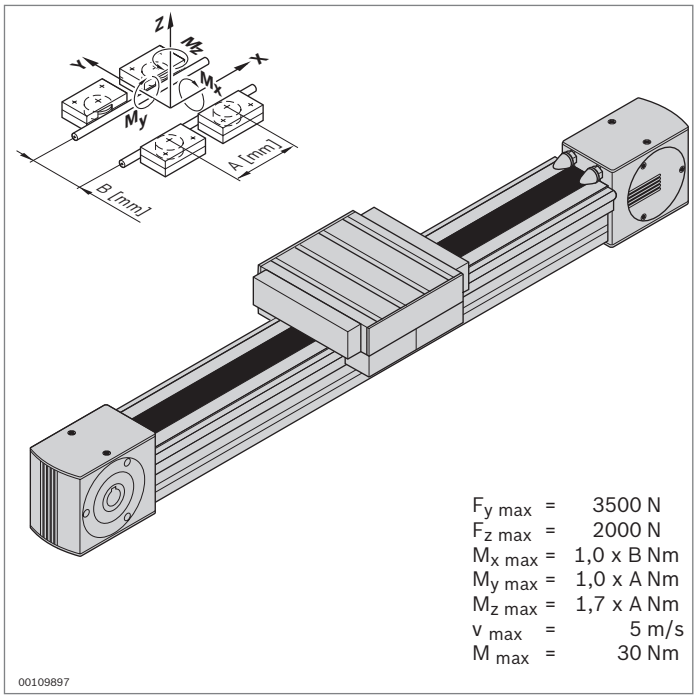

Cam roller guide LF12C – complete axis

10

- Fully assembled cam roller guide
- Stroke can be individually selected
- Clamping profile clipped into strut profile 90x90
- Incl. toothed belt drive; additional notes on the drive concept (p. 13-44)

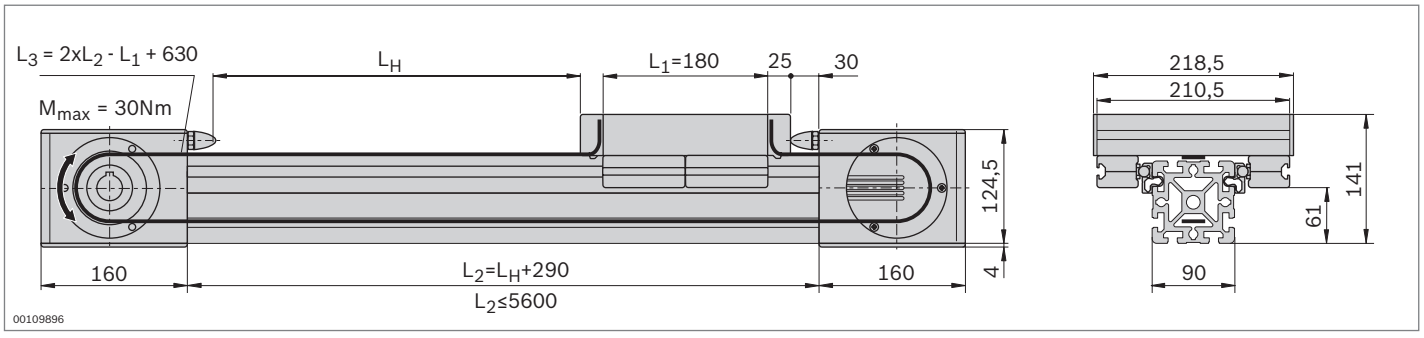

Technical data

For notes on layout and drive, see page 13-50

Complete axis	L_H (mm)	No.
LF12C	50 ... 5310	**3 842 998 498 / L_H**

13

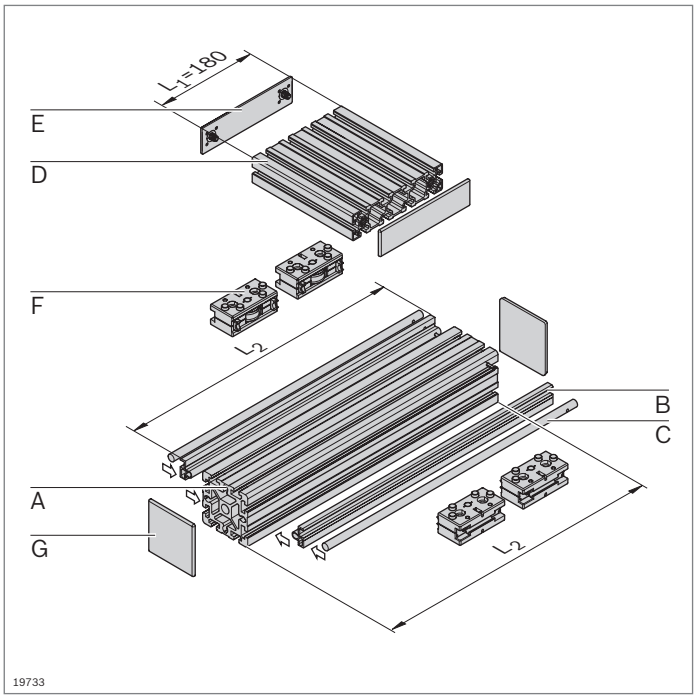

Cam roller guide LF12C – components

- Components for the individual assembly of cam roller guides, with or without drive

Parts list for cam roller guide LF12C without drive

Component		No.	Pcs	Page
A	Profile 90x90	**3 842 990 500 / L_2**	1	2-46
B	Clamping profile LF12C	**3 842 992 440 / L_2**	2	13-25
C	Guide rod LF12	**3 842 993 968 / L_2**	2	13-25
D	Profile 45x180	**3 842 990 335 / 210.5 mm**	1	2-43
E	Cover cap 45x180	**3 842 548 795**	2	2-43
F	Guide bearing LF12	**3 842 535 664**	4	13-26
G	Cover cap 90x90	**3 842 548 761**	2	2-46

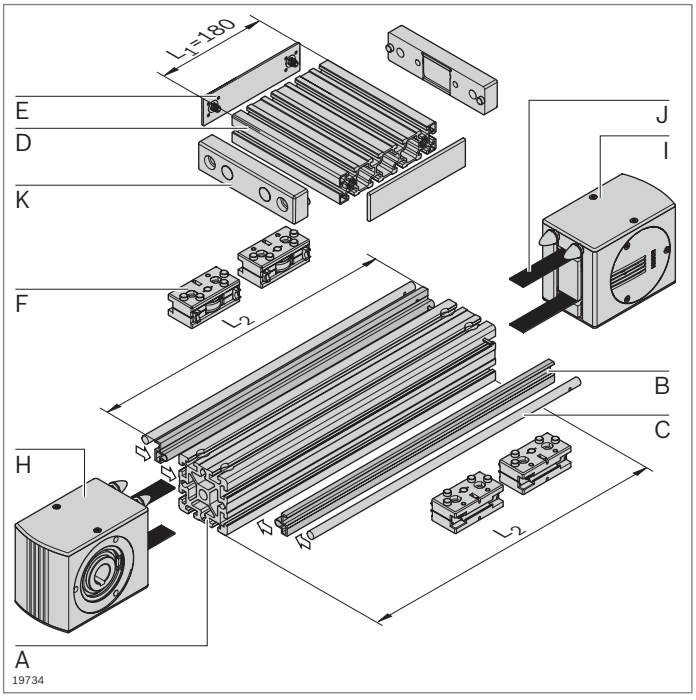

Parts list for cam roller guide LF12C with drive

Component		No.	Pcs	Page
A	Profile 90x90 LF LF	**3 842 993 082 / L_2**	1	2-46
B	Clamping profile LF12C	**3 842 992 440 / L_2**	2	13-25
C	Guide rod LF12	**3 842 993 968 / L_2**	2	13-25
D	Profile 45x180	**3 842 990 335 / 210.5 mm**	1	2-43
E	Cover cap 45x180	**3 842 548 795**	2	2-43
F	Guide bearing LF12	**3 842 535 664**	4	13-26
H	Drive head LF12C	**3 842 526 863**	1	13-28
I	Return head LF12C	**3 842 526 865**	1	13-28
J	Toothed belt LF12	**3 842 994 821 / L_3** [1)]	1	13-29
K	Belt connector LF12	**3 842 535 680**	2	13-29

1) $L_3 = 2xL_2 - L_1 + 630$

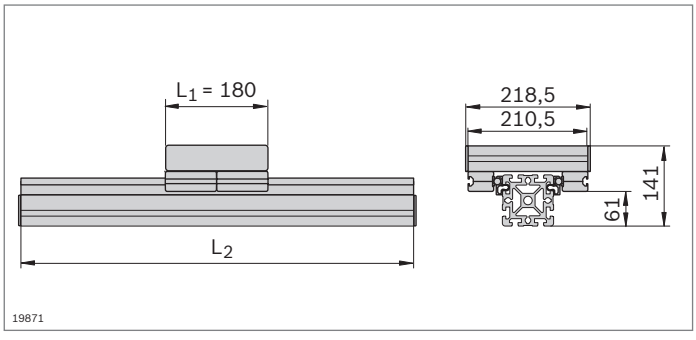

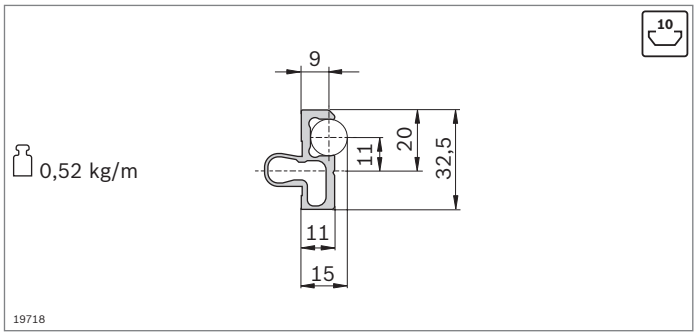

- The clamping profile is clipped into any chosen strut profile with a 10 mm slot and holds the guide rods

Clamping profile		L_2 (mm)	No.
LF12C	1 pc	150 ... 3000	**3 842 992 440 / L_2**
	20 pcs	3000	**3 842 518 897**
Material:	Aluminum; anodized		

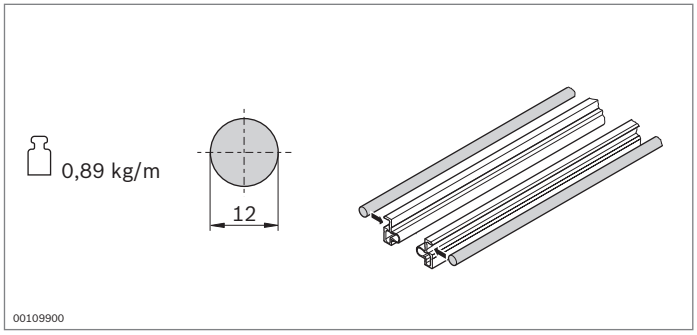

- The guide rod is pressed into the clamping profile
- The guide rod guides the guide bearing

Guide rod	L_2 (mm)		No.
LF12	150 ... 2900	1	**3 842 993 968 / L_2**
	2900	20	**3 842 539 415**
Material:	Solid shaft VA, induction hardened and polished		
Condition on delivery:	Ungreased; greasing according to assembly instructions **3 842 527 226**		

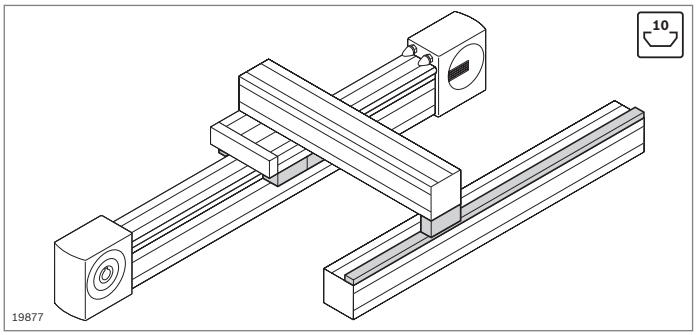

- Guide bearing for trolley construction
- Supporting bearing for brackets for bearing off-center forces
- Guide rail to support supporting bearings (p. 13-27)

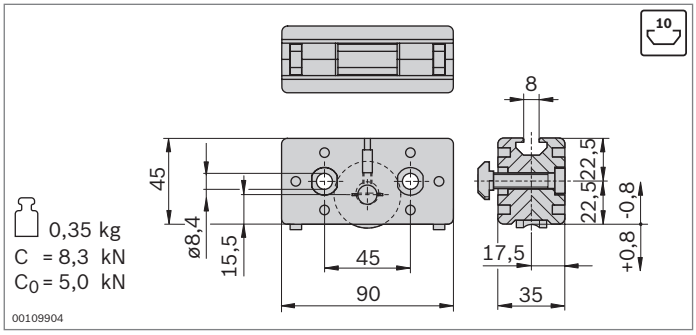

- Guide bearing for trolley construction
- Guiding via guide rod
- Cam rollers with ball bearings, permanently lubricated
- Lubricating felts with guide rod lubrication reservoir
- Play-free cam roller adjustment via eccentric bolts
- Replacement of the lubricating felts possible from rear in installed state

Guide bearing		No.	FS
LF12	2	**3 842 535 664**	2xFS1 4xFS2

Material:	Guide bearing: Diecast aluminum Cam roller: Steel, hardened, polished
Scope of delivery:	Incl. fastening material (FS)
Condition on delivery:	Lubricating felts ungreased; greasing according to assembly instructions **3 842 527 226**

FS1

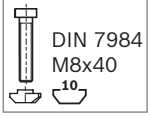

FS2

ø10xø5x11

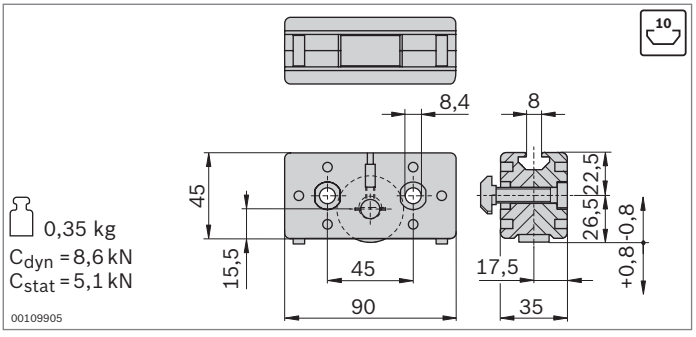

- Supporting bearing for brackets for bearing off-center forces
- For support on the guide rail
- Cam rollers with ball bearings, permanently lubricated
- Lubricating felts with guide rod lubrication reservoir
- Play-free cam roller adjustment via eccentric bolts
- Replacement of the lubricating felts possible from rear in installed state

Supporting bearing		No.	FS
LF12	2	**3 842 535 666**	2xFS1 4xFS2

Material:	Guide bearing: Diecast aluminum Cam roller: Steel, hardened, polished
Scope of delivery:	Incl. fastening material (FS)
Condition on delivery:	Lubricating felts ungreased; greasing according to assembly instructions **3 842 527 226**

FS1

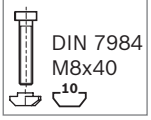

FS2

ø10xø5x11

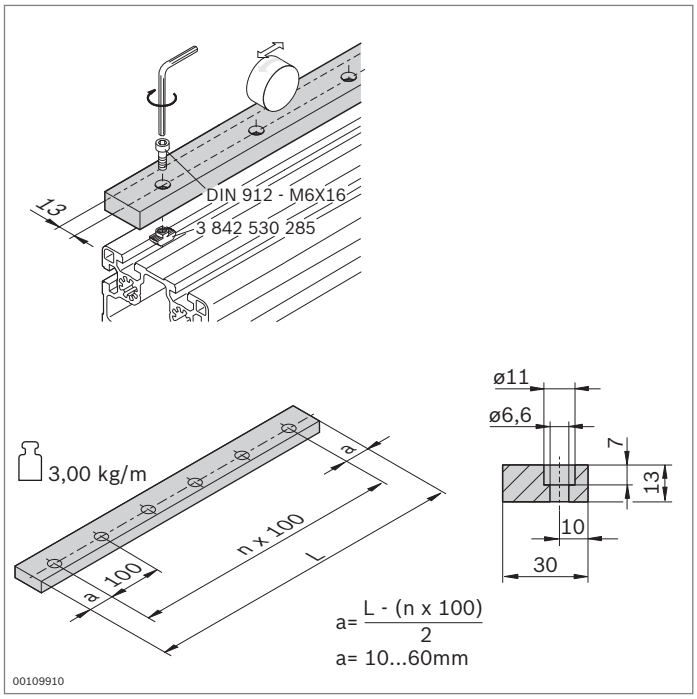

▶ Guide rail to hold supporting bearings

Guide rail	L (mm)	No.
LF12	120 ... 2000	**3 842 994 702 / L**
Material:	Steel, hardened, polished	
Condition on delivery:	Ungreased; greasing according to assembly instructions **3 842 527 226**	
Accessories:	Cylinder bolt DIN 912 – M6x16 T-nut M6, 10 mm slot (**3 842 530 285**)	

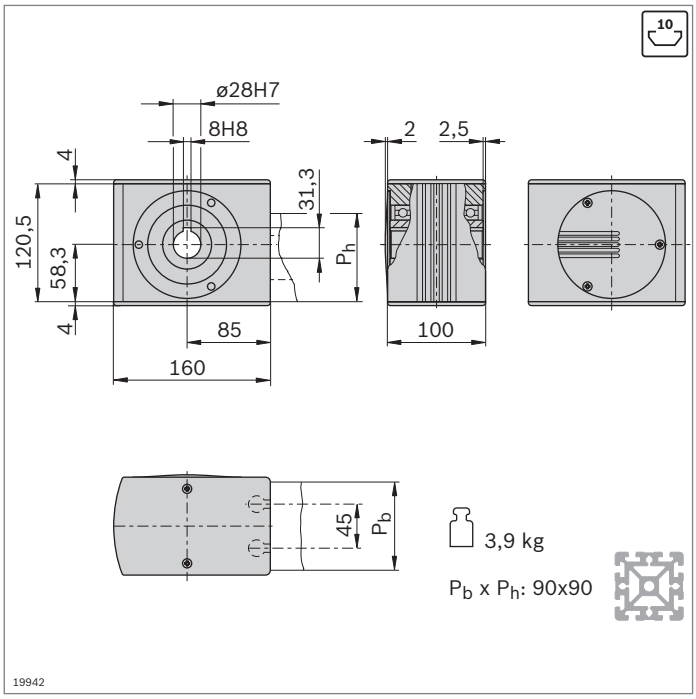

- Drive head for transferring drive torque to a toothed belt
- For direct mounting of a motor or (in conjunction with a plug-in shaft) for mounting a hollow shaft gear or a coupling (p. 13-46)
- Mounted directly on profile by using longitudinal end connector (connector included in scope of delivery)
- Profile finishing: LF blind hole drilling for longitudinal end connector

Drive head	No.	FS
LF12C	**3 842 526 863**	4xFS3, 2xFS4

Material:	Drive head: Aluminum; anodized Hollow shaft: Steel; galvanized Cover caps: PA; black
Scope of delivery:	Incl. Fastening material (FS), cover caps

FS3
ISO 7380
M8x40

FS4
ISO 4035
M8-04

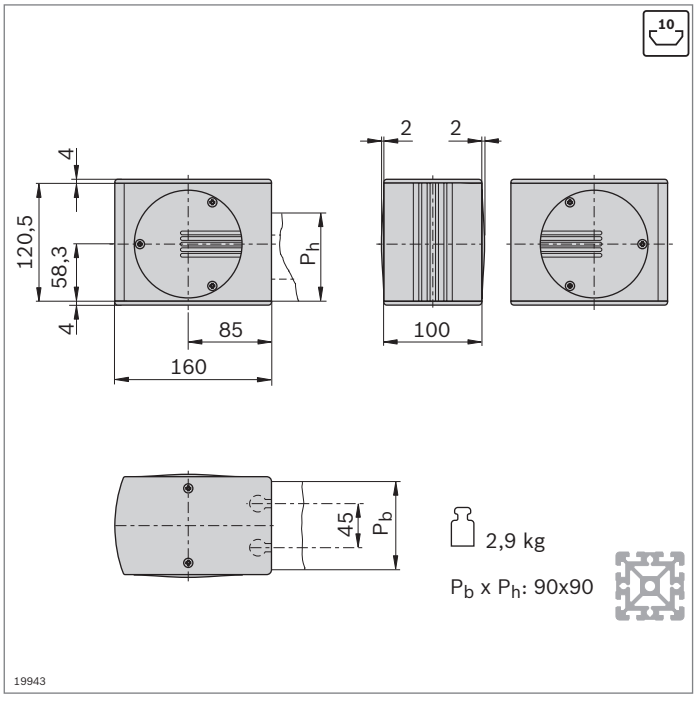

- Return head for tensioning the toothed belt and changing its direction
- Mounted directly on profile by using longitudinal end connector (connector included in scope of delivery)
- Profile finishing: LF blind hole drilling for longitudinal end connector

Return head	No.	FS
LF12C	**3 842 526 865**	4xFS3, 2xFS4

Material:	Return head: Aluminum; anodized Hollow shaft: Steel; galvanized Cover caps: PA; black
Scope of delivery:	Incl. Fastening material (FS), cover caps

FS3
ISO 7380
M8x40

FS4
ISO 4035
M8-04

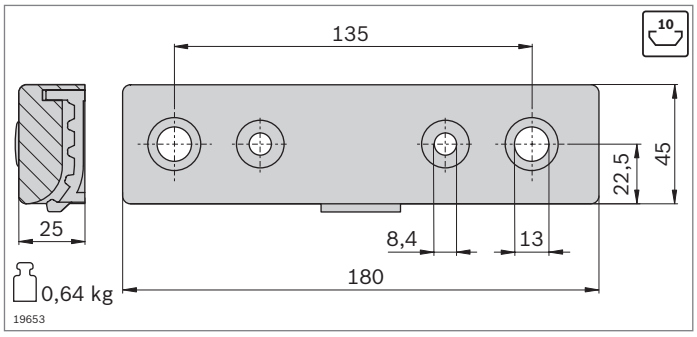

- Belt connector suitable for trolley built out of strut profiles 45x180
- All connecting parts included for mounting at the profile end (LF12S) or the slot (LF12C)
- Profile finishing for strut profile 45x180 for trolley LF12S: M12

Belt connector		No.	FS
LF12	2	**3 842 535 680**	4xFS2, 2xFS5, 2xFS6, 2xFS7, 2xFS8

Material: Aluminum, painted black
Scope of delivery: Incl. fastening material (FS)

FS2
ø10xø5x11

FS5
DIN7984
M12x40

FS6
DIN 7984
M8x30
DIN 125
A8,4
10

FS7
DIN 7991
M8x30
10

FS8
ø18x7

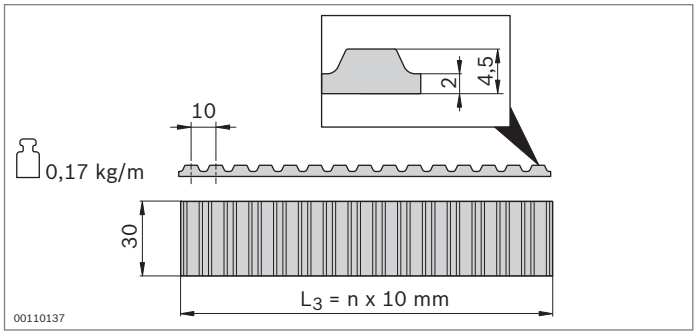

- Toothed belt as a trolley drive
- Pitch: AT10

Toothed belt	L_3 (mm)	No.
LF12	300 ... 50000	**3 842 994 821 / L_3** [1]
	50000	**3 842 526 422**

[1] $L_3 = 2xL_2 - L_1 + 630$
Material: PU with embedded steel wires

13

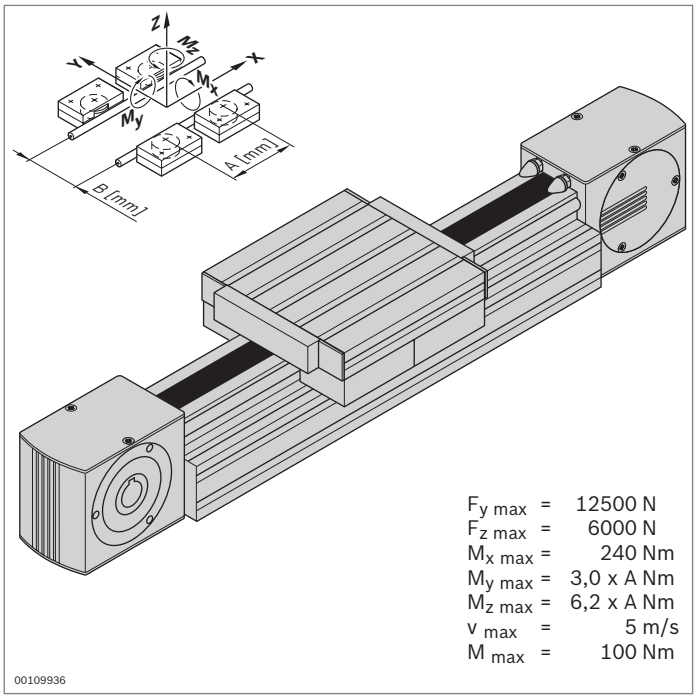

Cam roller guide LF20S – complete axis

10

- Fully assembled cam roller guide
- Stroke and trolley length can be individually selected
- Rail profile mounted on strut profile 90x180
- Incl. toothed belt drive; additional notes on the drive concept (p. 13-44)

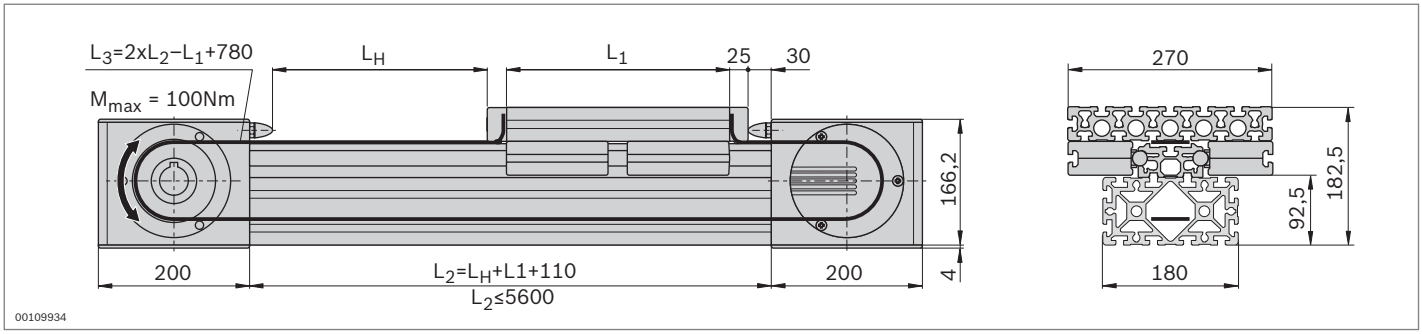

Technical data

See pages 13-57 for notes on layout and drive

Complete axis	L_H / L_1 (mm)	No.
LF20S	L_1+50 ≤ L_H ≤ 5220 270 ≤ L_1 ≤ 1000	**3 842 998 499 / L_H / L_1**

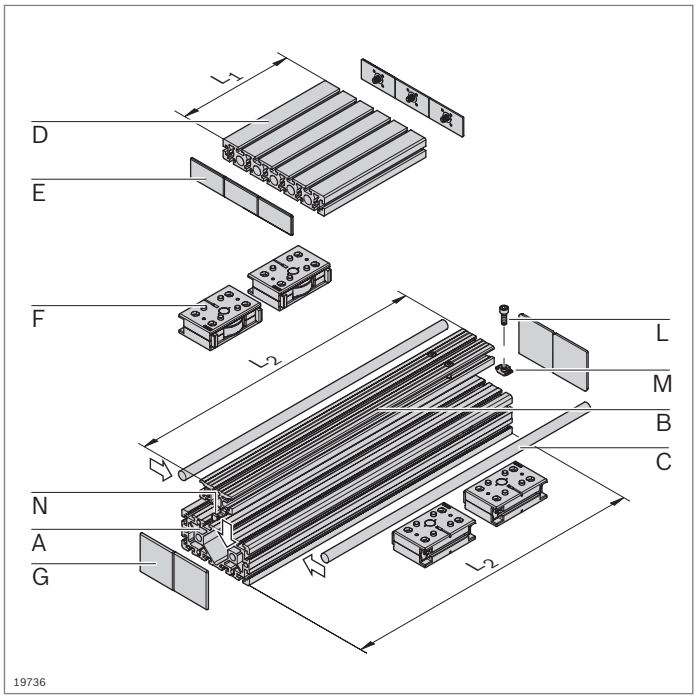

Cam roller guide LF20S – components

- Components for the individual assembly of cam roller guides, with or without drive

Parts list for cam roller guide LF20S without drive

Component		No.	Pcs	Page
A	Profile 90x180	**3 842 990 416 / L_2**	1	2-47
B	Guide profile LF20S	**3 842 993 080 / L_2**	1	13-32
C	Guide rod LF20	**3 842 993 969 / L_2**	2	13-32
D	Profile 45x270	**3 842 992 927 / L_1**	1	2-44
E	Cover cap 45x90	**3 842 548 757**	6	2-44
F	Guide bearing LF20	**3 842 535 663**	4	13-33
G	Cover cap 90x90	**3 842 548 761**	4	2-46
L	Cylinder bolt DIN 7984 – M8x45		n[1)]	
M	T-nut M8, 10 mm slot	**3 842 530 287**	n[1)]	3-4
N	Sliding block	**3 842 146 877**	n[1)]	13-32

[1)] For identification see page 13-32

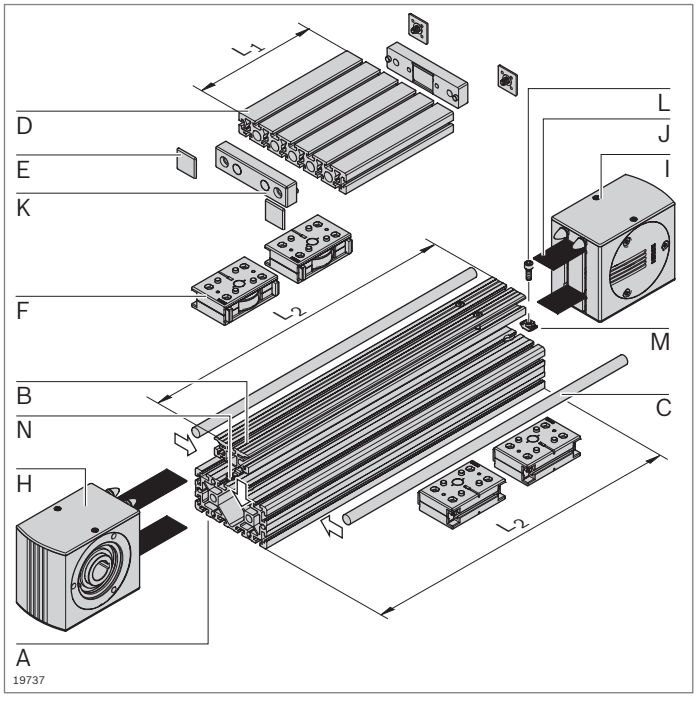

Parts list for cam roller guide LF20S with drive

Component		No.	Pcs	Page
A	Profile 90x180 LF-S LF-S	**3 842 993 081 / L_2**	1	2-47
B	Guide profile LF20S	**3 842 993 080 / L_2**	1	13-32
C	Guide rod LF20	**3 842 993 969 / L_2**	2	13-32
D	Profile 45x270 M12 M12	**3 842 992 928 / L_1**	1	2-44
E	Cover cap 45x45	**3 842 548 753**	4	2-39
F	Guide bearing LF20	**3 842 535 663**	4	13-33
H	Drive head LF20S	**3 842 526 414**	1	13-35
I	Return head LF20S	**3 842 526 415**	1	13-35
J	Toothed belt LF20	**3 842 994 662 / L_3[1)]**	1	13-36
K	Belt connector LF20	**3 842 535 680**	2	13-36
L	Cylinder bolt DIN 7984 – M8x45		n[2)]	
M	T-nut M8, 10 mm slot	**3 842 530 287**	n[2)]	3-4
N	Sliding block	**3 842 146 877**	n[2)]	13-32

[1)] $L_3 = 2xL_2 - L_1 + 780$

[2)] For identification see page 13-32

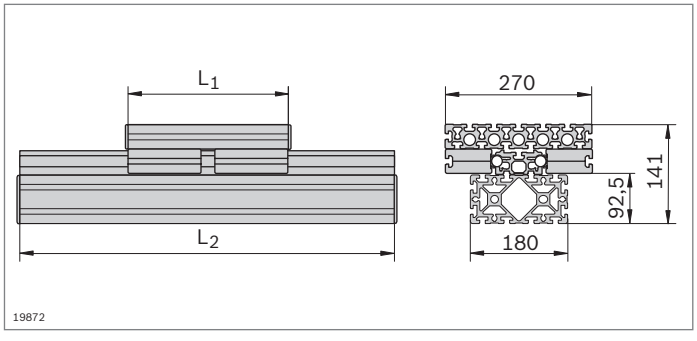

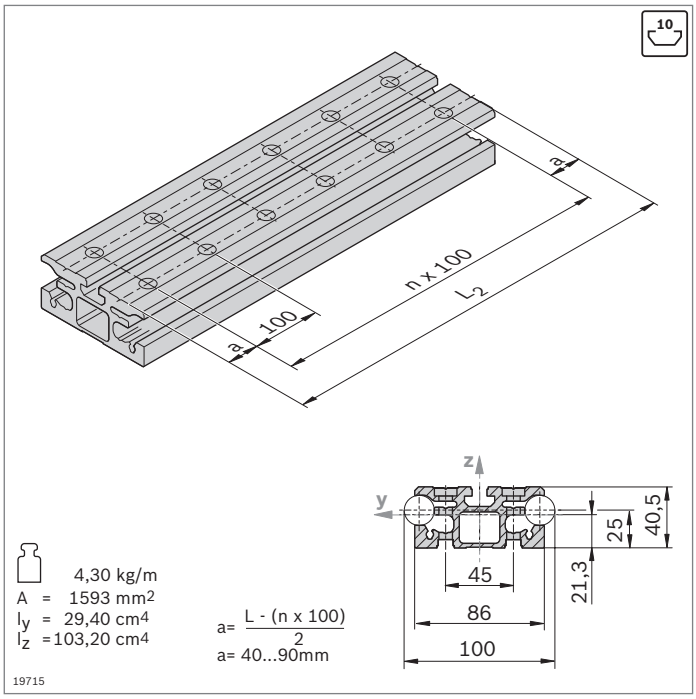

- Guide profile LF20S to hold the guide rods
- Installation on MGE strut profiles with 10 mm slot or directly on a flat surface

Guide profile		L_2 (mm)	No.
LF20S	1 pc	180 ... 6070	**3 842 993 080 / L_2**
	6 pcs	6070	**3 842 557 958**

Accessories: Cylinder screw DIN 7984 M8x45
T-nut M8, 10 mm slot (p. 3-4)
Sliding block

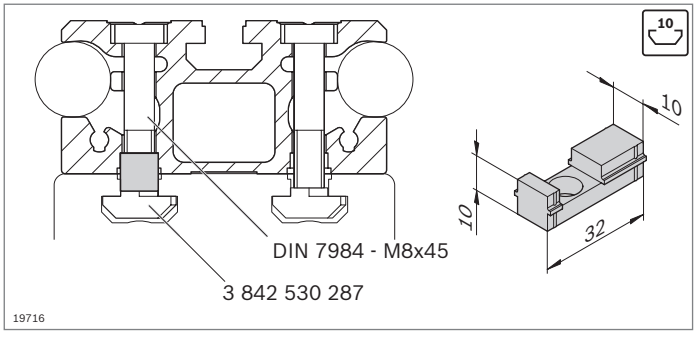

- Sliding block as a centering aid for mounting the guide profile in a 10 mm profile slot

Sliding block		No.
	50	**3 842 146 877**

Material: PA; black

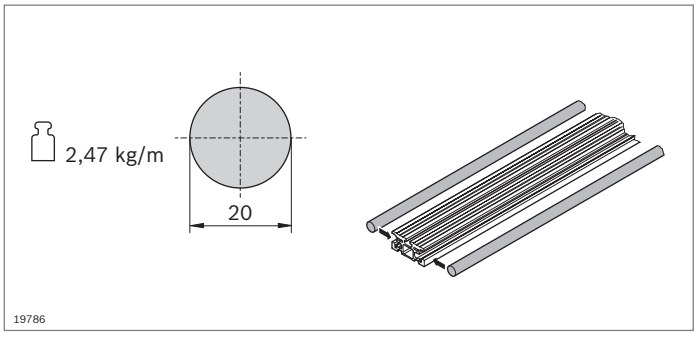

- The guide rod is pressed into the guide profile
- The guide rod guides the guide bearing

Guide rod	L_2 (mm)		No.
LF20	150 ... 2900	1	**3 842 993 969 / L_2**
	2900	20	**3 842 539 416**

Material: Solid shaft VA, induction hardened, polished
Condition on delivery: Ungreased; greasing according to assembly instructions **3 842 527 226**

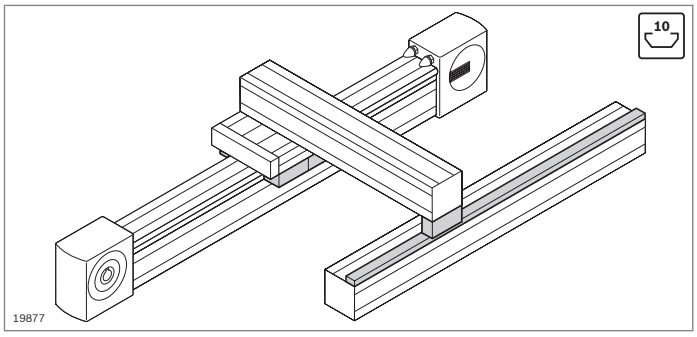

- Guide bearing for trolley construction
- Supporting bearing for brackets for bearing off-center forces
- Guide rail to support supporting bearings (p. 13-34)

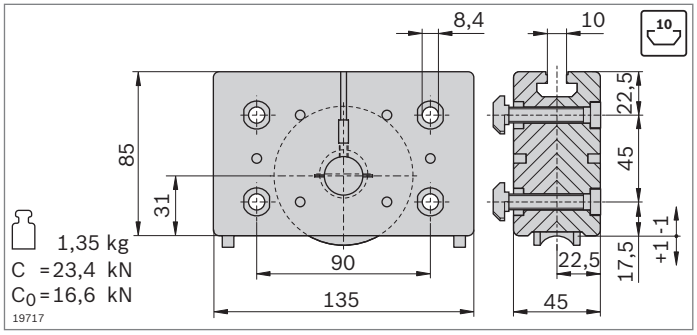

FS1
DIN 7984
M8x50
10

FS2
ø10xø5x11

- Guide bearing for trolley construction
- Guiding via guide rod
- Cam rollers with ball bearings, permanently lubricated
- Lubricating felts with guide rod lubrication reservoir
- Play-free cam roller adjustment via eccentric bolts
- Replacement of the lubricating felts possible from rear in installed state

Guide bearing		No.	FS
LF20	2	**3 842 535 663**	4xFS1 4xFS2

Material:	Housing: Diecast aluminum Cam roller: Steel, hardened, polished
Scope of delivery:	Incl. fastening material (FS)
Condition on delivery:	Lubricating felts ungreased; greasing according to assembly instructions **3 842 527 226**

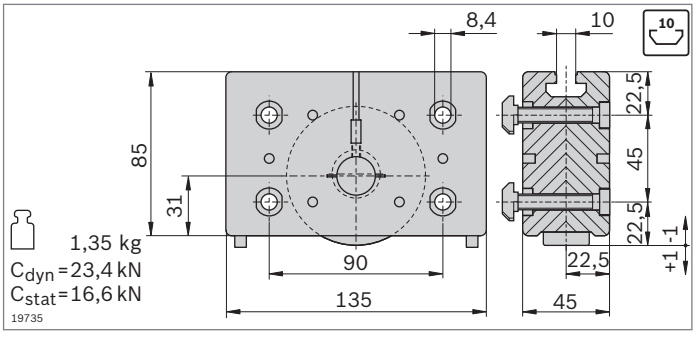

FS1
DIN 7984
M8x50
10

FS2
ø10xø5x11

- Supporting bearing for brackets for bearing off-center forces
- For support on the guide rail
- Cam rollers with ball bearings, permanently lubricated
- Lubricating felts with guide rod lubrication reservoir
- Play-free cam roller adjustment via eccentric bolts
- Replacement of the lubricating felts possible from rear in installed state

Supporting bearing		No.	FS
LF20	2	**3 842 535 665**	4xFS1 4xFS2

Material:	Housing: Diecast aluminum Cam roller: Steel, hardened, polished
Scope of delivery:	Incl. fastening material (FS)
Condition on delivery:	Lubricating felts ungreased; greasing according to assembly instructions **3 842 527 226**

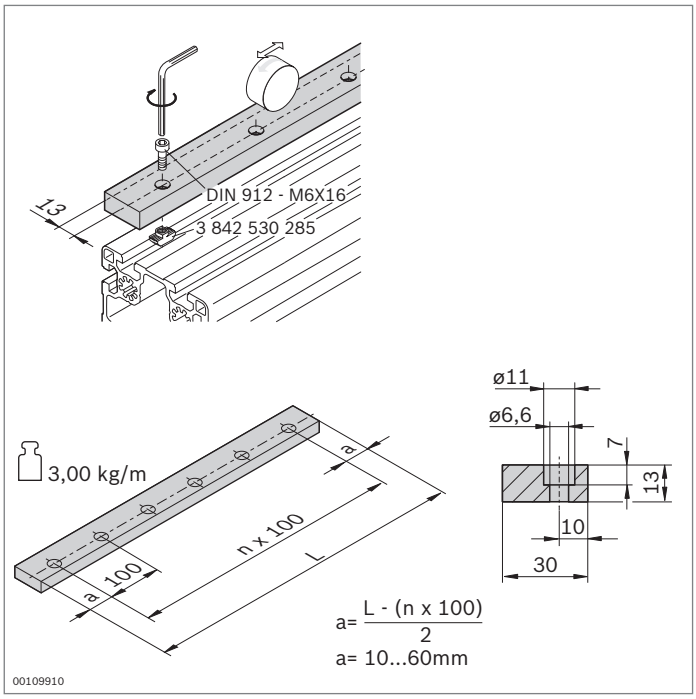

▶ Guide rail to hold supporting bearings

Guide rail	L (mm)	No.
LF20	120 ... 2000	**3 842 994 702 / L**
Material:	Steel, hardened, polished	
Condition on delivery:	Ungreased; greasing according to assembly instructions **3 842 527 226**	
Accessories:	Cylinder bolt DIN 912 – M6x16 T-nut M6, 10 mm slot (**3 842 530 285**)	

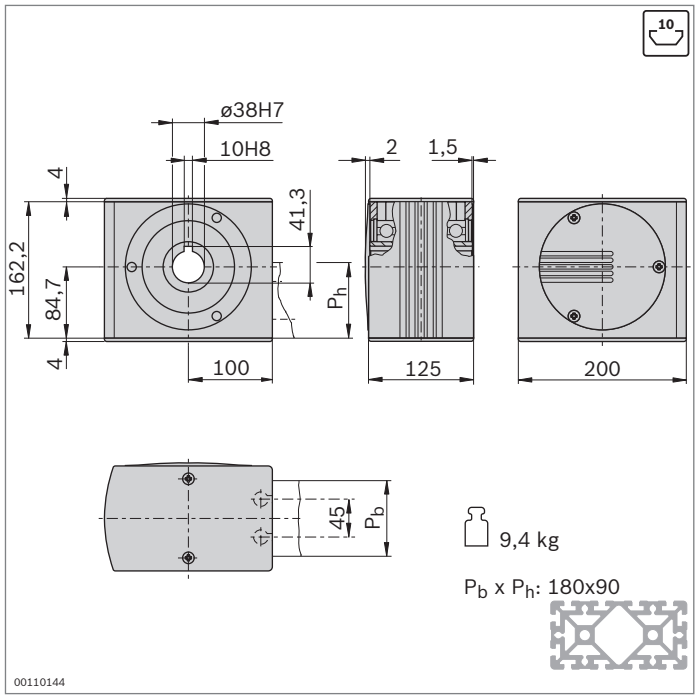

- Drive head for transferring drive torque to a toothed belt
- For direct mounting of a motor or (in conjunction with a plug-in shaft) for mounting a hollow shaft gear or a coupling (p. 13-46)
- Mounted directly on profile by using longitudinal end connector (connector included in scope of delivery)
- Profile finishing: LF-S blind hole drilling for longitudinal end connector

Drive head	No.	FS
LF20S	**3 842 526 414**	4xFS3, 2xFS4

Material:	Drive head: Aluminum; anodized Hollow shaft: Steel; galvanized
Scope of delivery:	Incl. Fastening material (FS), cover caps

FS3
ISO 7380
M8x40

FS4
ISO 4035
M8-04

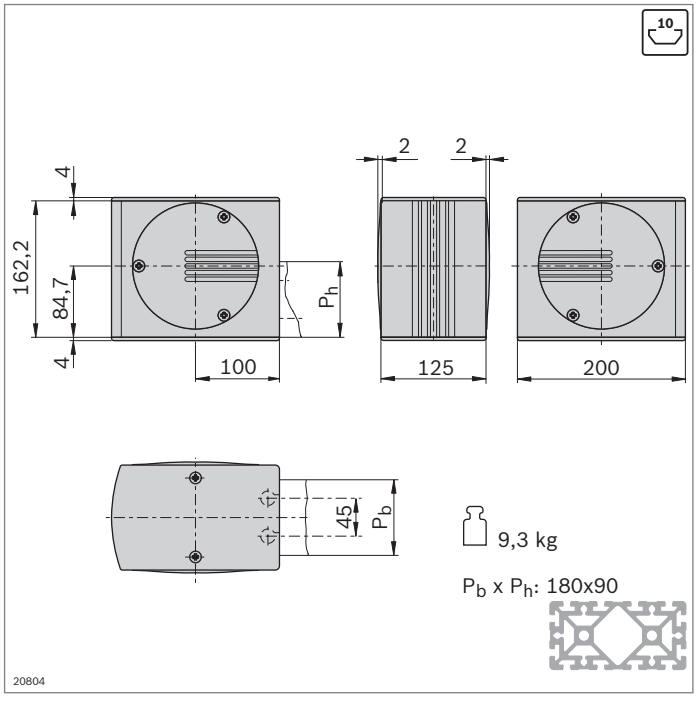

- Return head for tensioning the toothed belt and changing its direction
- Mounted directly on profile by using longitudinal end connector (connector included in scope of delivery)
- Profile finishing: LF-S blind hole drilling for longitudinal end connector

Return head	No.	FS
LF20S	**3 842 526 415**	4xFS3, 2xFS4

Material:	Return head: Aluminum; anodized Hollow shaft: Steel; galvanized Cover caps: PA; black
Scope of delivery:	Incl. Fastening material (FS), cover caps

FS3
ISO 7380
M8x40

FS4
ISO 4035
M8-04

13

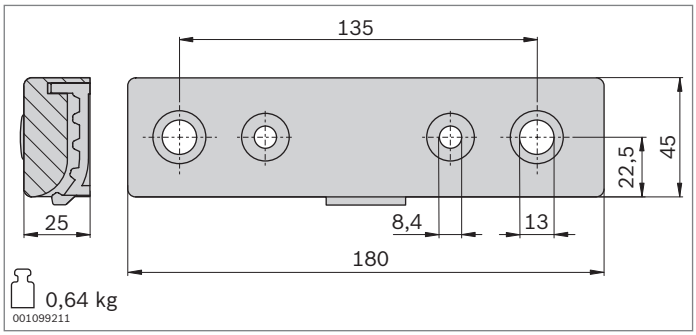

- Belt connector for fixing the toothed belt on the front of the trolley
- Profile finishing for strut profile 45x270 for trolley LF20S: M12
- All connecting parts included for mounting at the profile end (LF20S) or the slot (LF20C)

Belt connector		No.	FS
LF20	2	**3 842 535 680**	4xFS2, 2xFS5, 2xFS6, 2xFS7, 2xFS8

Material: Aluminum, painted black
Scope of delivery: Incl. fastening material (FS)

FS2
ø10xø5x11

FS5
DIN7984
M12x40

FS6
DIN 7984
M8x30
DIN 125
A8,4
10

FS7
DIN 7991
M8x30
10

FS8
ø18x7

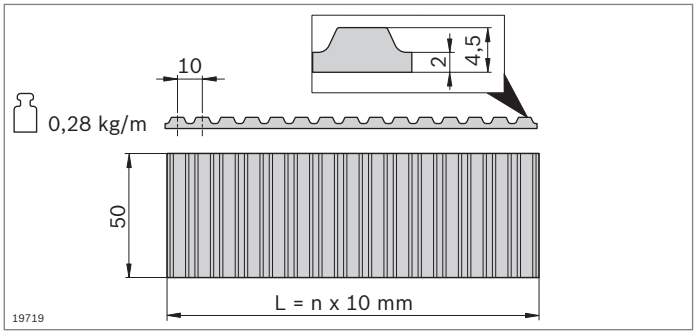

- Toothed belt as a trolley drive
- Pitch: AT10

Toothed belt	L_3 (mm)	No.
LF20	300 ... 50000	**3 842 994 662 / L_3 [1)]**
	50000	**3 842 513 648**

[1)] $L_3 = 2xL_2 - L_1 + 780$
Material: PU with embedded steel wires

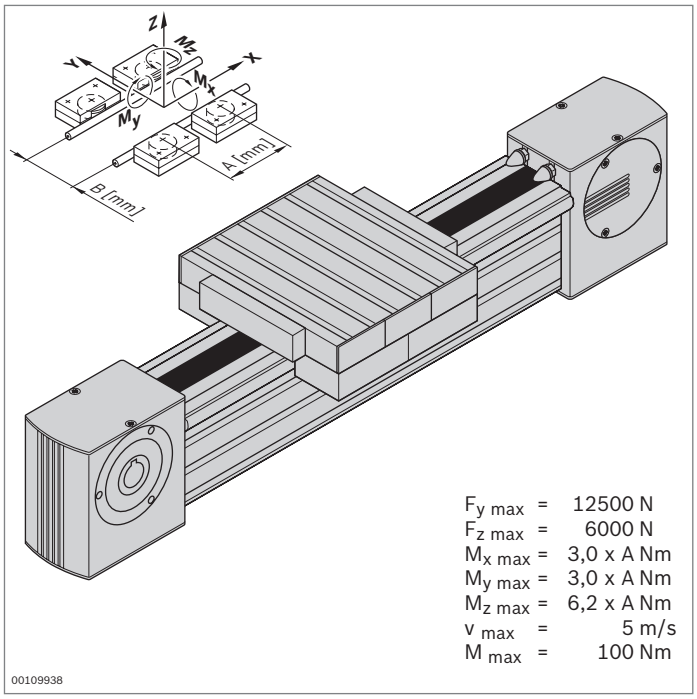

Cam roller guide LF20C – complete axis

10

- Fully assembled cam roller guide
- Stroke can be individually selected
- Clamping profile clipped into strut profile 90x180
- Incl. toothed belt drive; additional notes on the drive concept (p. 13-44)

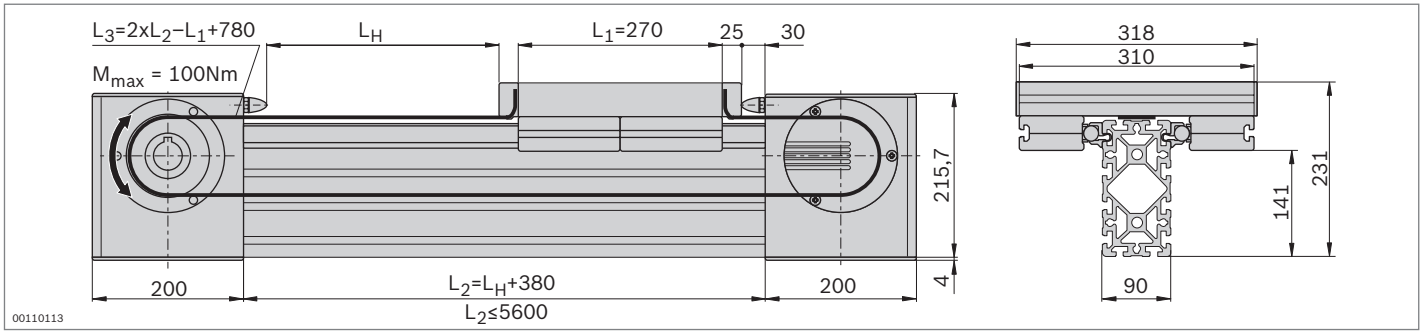

Technical data

For notes on layout and drive, see page 13-50

Complete axis	L_H (mm)	No.
LF20C	50 ... 5220	**3 842 998 500 / L_H**

13

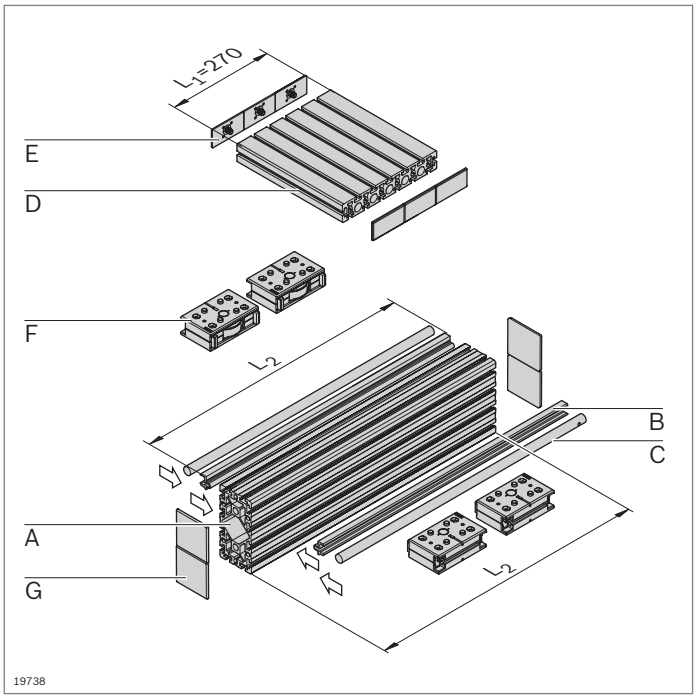

Cam roller guide LF20C – components

- Components for the individual assembly of cam roller guides, with or without drive

Parts list for cam roller guide LF20C without drive

Component		No.	Pcs	Page
A	Profile 90x180	**3 842 990 416 / L_2**	1	2-47
B	Clamping profile LF20C	**3 842 992 441 / L_2**	2	13-39
C	Guide rod LF20	**3 842 993 969 / L_2**	2	13-39
D	Profile 45x270	**3 842 992 927 / 310 mm**	1	2-44
E	Cover cap 45x90	**3 842 548 757**	6	2-44
F	Guide bearing LF20	**3 842 535 663**	4	13-40
G	Cover cap 90x90	**3 842 548 761**	4	2-47

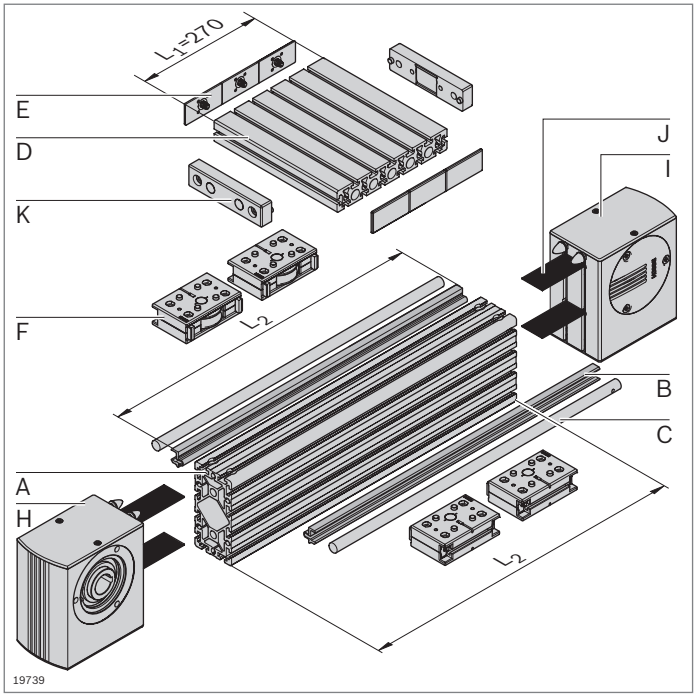

Parts list for cam roller guide LF20C with drive

Component		No.	Pcs	Page
A	Profile 90x180 LF LF	**3 842 992 898 / L_2**	1	2-47
B	Clamping profile LF20C	**3 842 992 441 / L_2**	2	13-39
C	Guide rod LF20	**3 842 993 969 / L_2**	2	13-39
D	Profile 45x270	**3 842 992 927 / 310 mm**	1	2-44
E	Cover cap 45x90	**3 842 548 757**	6	2-44
F	Guide bearing LF20	**3 842 535 663**	4	13-40
H	Drive head	**3 842 526 867**	1	13-42
I	Return head	**3 842 526 869**	1	13-42
J	Toothed belt	**3 842 994 662 / L_3**[1)]	1	13-43
K	Belt connector	**3 842 535 680**	2	13-43

[1)] $L_3 = 2xL_2 - L_1 + 780$

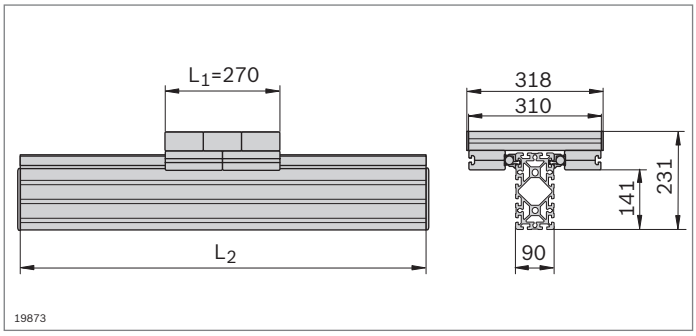

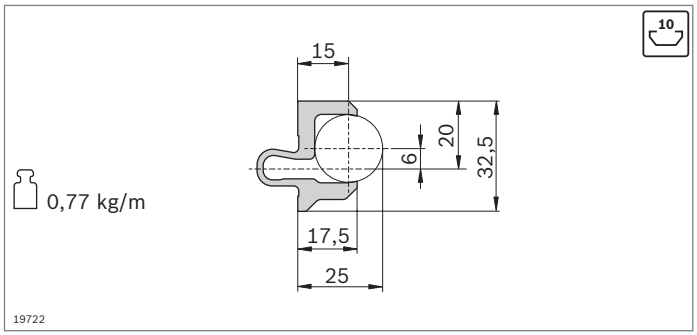

- The clamping profile is clipped into any chosen 10 mm strut profile slot and holds the guide rods

Clamping profile		L (mm)	No.
LF20C	1 pc	150 ... 3000	**3 842 992 441 / L**
	20 pcs	3000	**3 842 518 898**
Material:	Aluminum; anodized		

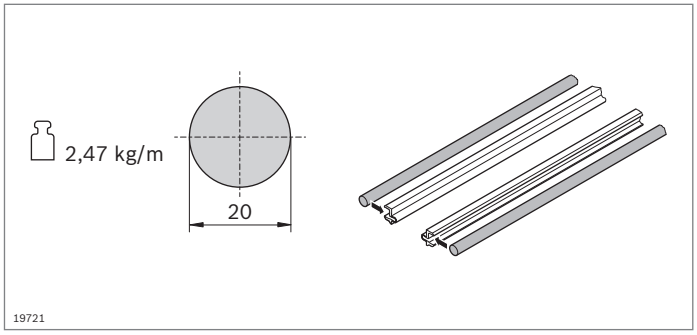

- The guide rod is pressed into the clamping profile
- The guide rod guides the guide bearing

Guide rod	L (mm)		No.
LF20	150 ... 2900	1	**3 842 993 969 / L**
	2900	20	**3 842 539 416**
Material:	Solid shaft VA, induction hardened, polished		
Condition on delivery:	Ungreased; greasing according to assembly instructions **3 842 527 226**		

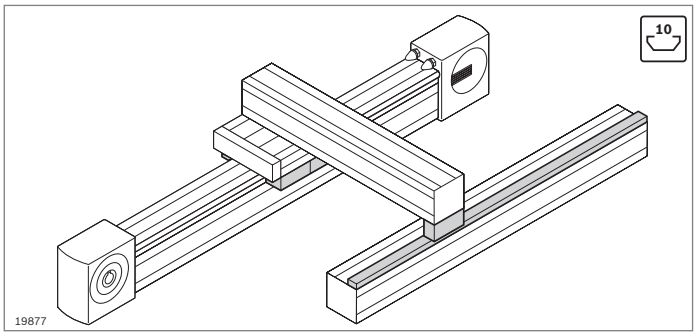

- Guide bearing for trolley construction
- Supporting bearing for brackets for bearing off-center forces
- Guide rail to support supporting bearings (p. 13-41)

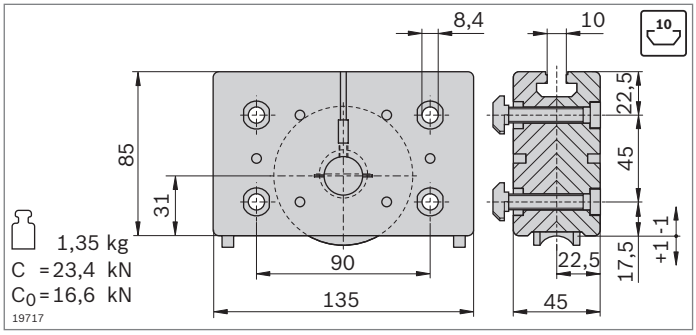

- Guide bearing for trolley construction
- Guiding via guide rod
- Cam rollers with ball bearings, permanently lubricated
- Lubricating felts with guide rod lubrication reservoir
- Play-free cam roller adjustment via eccentric bolts
- Replacement of the lubricating felts possible from rear in installed state

FS1
DIN 7984
M8x50

FS2
ø10xø5x11

Guide bearing		No.	FS
LF20	2	**3 842 535 663**	4xFS1 4xFS2

Material:	Housing: Diecast aluminum Cam roller: Steel, hardened, polished
Scope of delivery:	Incl. fastening material (FS)
Condition on delivery:	Lubricating felts ungreased; greasing according to assembly instructions **3 842 527 226**

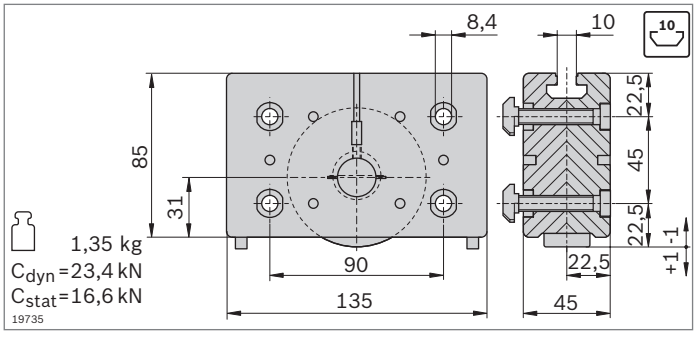

- Supporting bearing for brackets for bearing off-center forces
- For support on the guide rail
- Cam rollers with ball bearings, permanently lubricated
- Lubricating felts with guide rod lubrication reservoir
- Play-free cam roller adjustment via eccentric bolts
- Replacement of the lubricating felts possible from rear in installed state

FS1
DIN 7984
M8x50

FS2
ø10xø5x11

Supporting bearing		No.	FS
LF20	2	**3 842 535 665**	4xFS1 4xFS2

Material:	Housing: Diecast aluminum Cam roller: Steel, hardened, polished
Scope of delivery:	Incl. fastening material (FS)
Condition on delivery:	Lubricating felts ungreased; greasing according to assembly instructions **3 842 527 226**

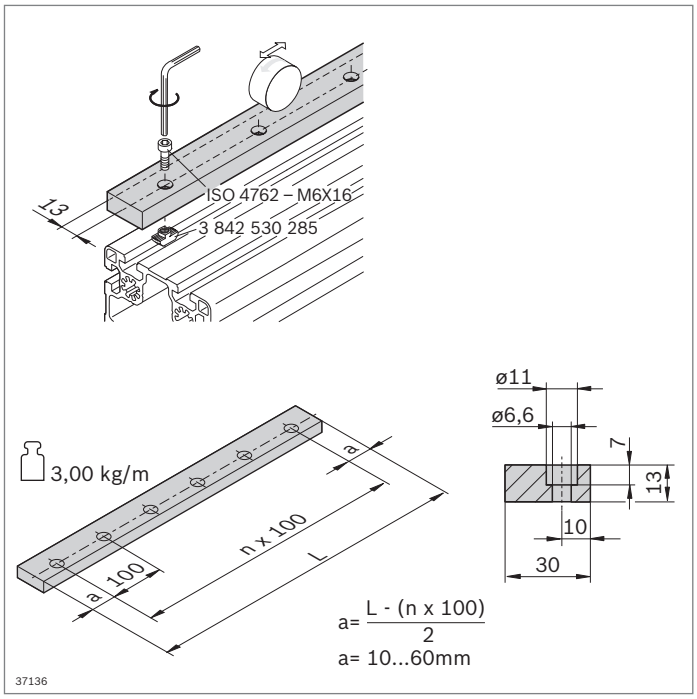

▶ Guide rail to hold supporting bearings

Guide rail	L (mm)	No.
LF20	120 ... 2000	**3 842 994 702 / L**
Material:	Steel, hardened, polished	
Accessories:	Cap screw ISO 4762 – M6x16 T-nut M6, 10 mm slot (**3 842 530 285**)	
Condition on delivery:	Ungreased; greasing according to assembly instructions **3 842 527 226**	

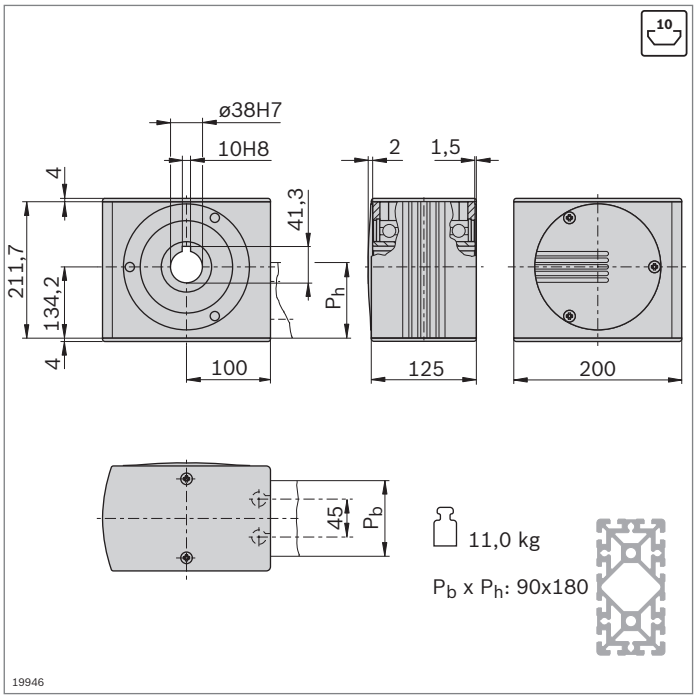

- Drive head for transferring drive torque to a toothed belt
- For direct mounting of a motor or (in conjunction with a plug-in shaft) for mounting a hollow shaft gear or a coupling (p. 13-46)
- Mounted directly on profile by using longitudinal end connector (connector included in scope of delivery)
- Profile finishing: LF blind hole drilling for longitudinal end connector

Drive head	No.	FS
LF20C	**3 842 526 867**	4xFS3, 2xFS4

Material:	Drive head: Aluminum; anodized Hollow shaft: Steel; galvanized
Scope of delivery:	Incl. Fastening material (FS), cover caps

FS3
ISO 7380
M8x40

FS4
ISO 4035
M8-04

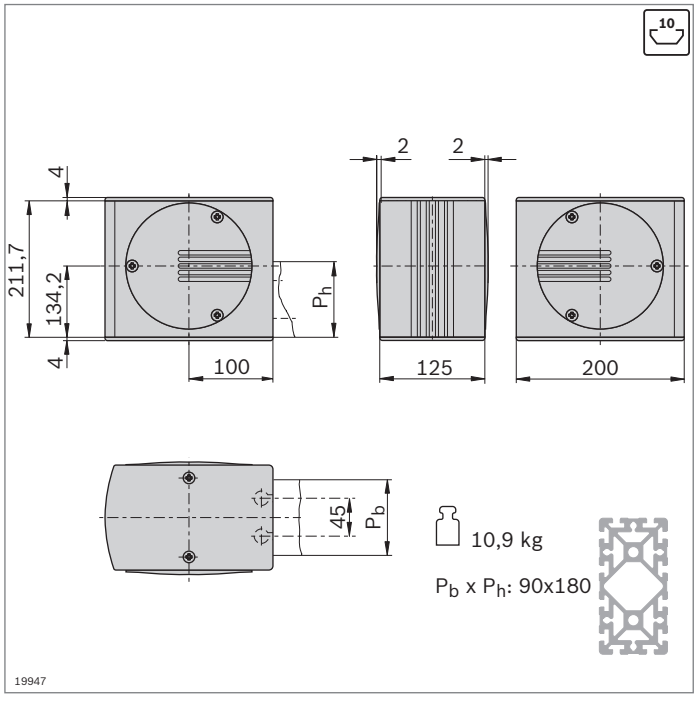

- Return head for tensioning the toothed belt and changing its direction
- Mounted directly on profile by using longitudinal end connector (connector included in scope of delivery)
- Profile finishing: LF blind hole drilling for longitudinal end connector

Return head	No.	FS
LF20C	**3 842 526 869**	4xFS3, 2xFS4

Material:	Return head: Aluminum; anodized Hollow shaft: Steel; galvanized Cover caps: PA; black
Scope of delivery:	Incl. Fastening material (FS), cover caps

FS3
ISO 7380
M8x40

FS4
ISO 4035
M8-04

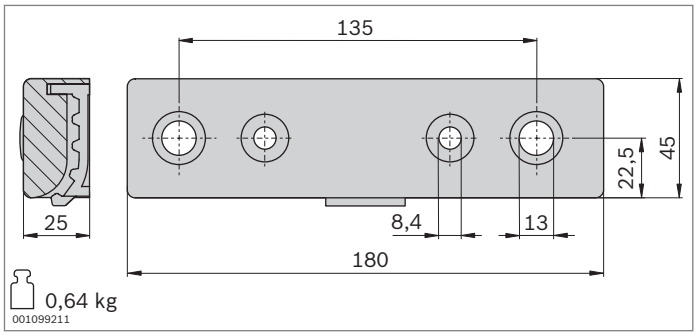

- Belt connector for fastening the toothed belt to the trolley slot
- Profile finishing for strut profile 45x270 for trolley LF20S: M12
- All connecting parts included for mounting at the profile end (LF20S) or the slot (LF20C)

Belt connector		No.	FS
LF20	2	**3 842 535 680**	4xFS2, 2xFS5, 2xFS6, 2xFS7, 2xFS8

Material: Aluminum, painted black
Scope of delivery: Incl. fastening material (FS)

FS2
ø10xø5x11

FS5
DIN7984
M12x40

FS6
DIN 7984
M8x30
DIN 125
A8,4
10

FS7
DIN 7991
M8x30
10

FS8
ø18x7

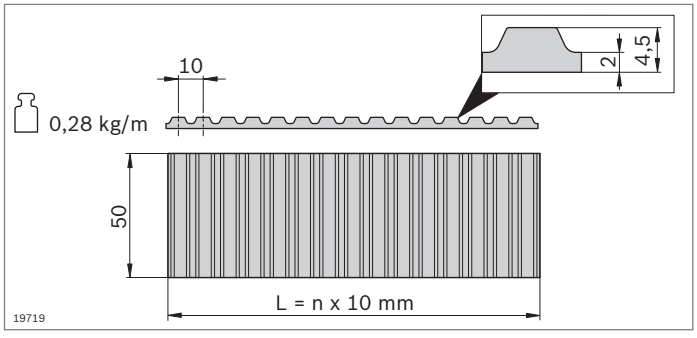

- Toothed belt as a trolley drive
- Pitch: AT10

Toothed belt	L (mm)	No.
LF20	300 ... 50000	**3 842 994 662 / L_3**[1)]
	50000	**3 842 513 648**

[1)] $L_3 = 2xL_2 - L_1 + 780$
Material: PU with embedded steel wires

13

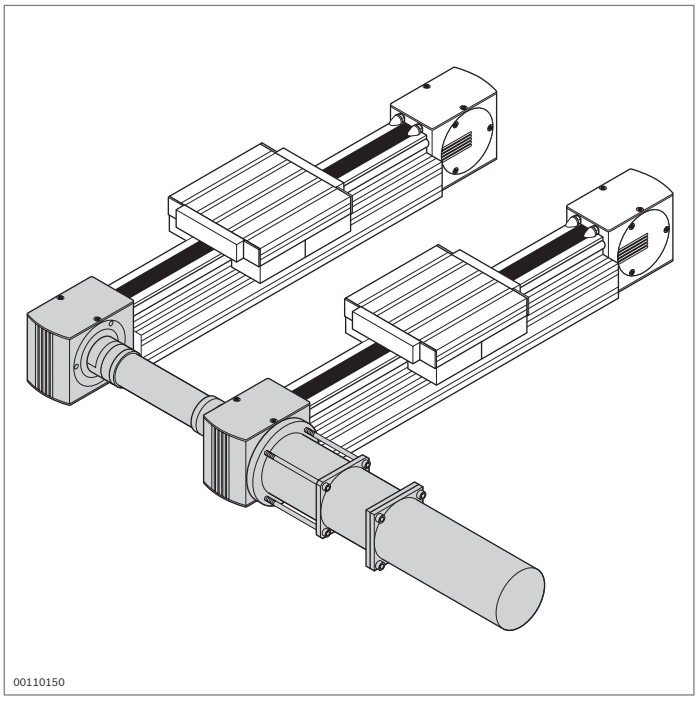

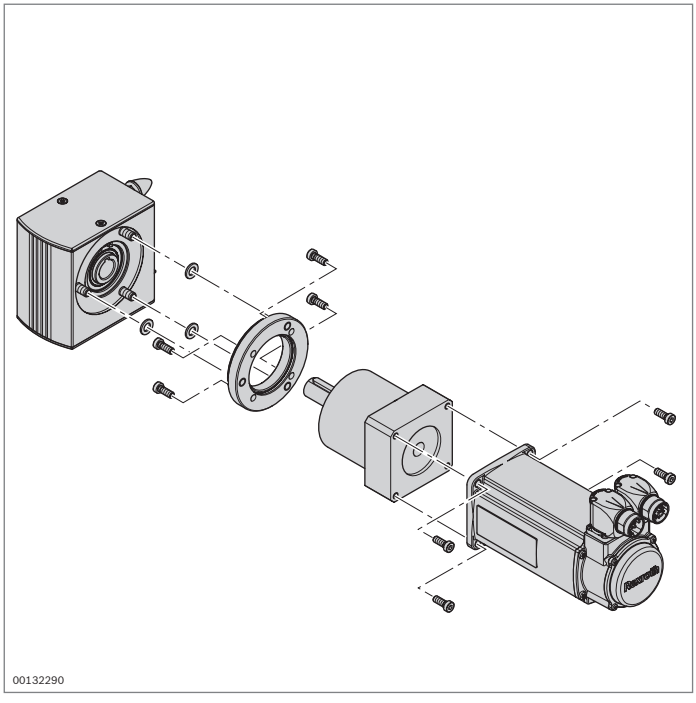

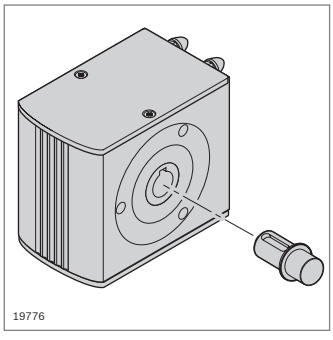

Linear guide drives

Drive concept

The linear guides are driven via the hollow shaft in the drive head. The drive head is used to directly install a motor or alternatively (in connection with a plug-in shaft) a hollow shaft gear or a coupling. Depending on the desired speeds of movement for the application, it is necessary to use various motor types in conjunction with intermediate gears. Due to the multitude of drive components available in the market, there are a large number of possible combinations.

The MGE modular profile system makes it easy to assemble Bosch Rexroth linear guides through the use of a standard shaft and simple connection dimensions.

Fastening

The drive head is directly secured on the profile by means of longitudinal end connectors.
The motor, or the intermediate gear flange, can be screwed to the drive head as a complete unit from the left- or right-hand side.

Synchronous shafts

The use of synchronous shafts (p. 13-47) enables several linear axes to be operated with one drive.

Connection dimensions (flanges)

The connection dimensions for the size LF6, LF12 and LF20 linear guides are shown on pages 13-45.

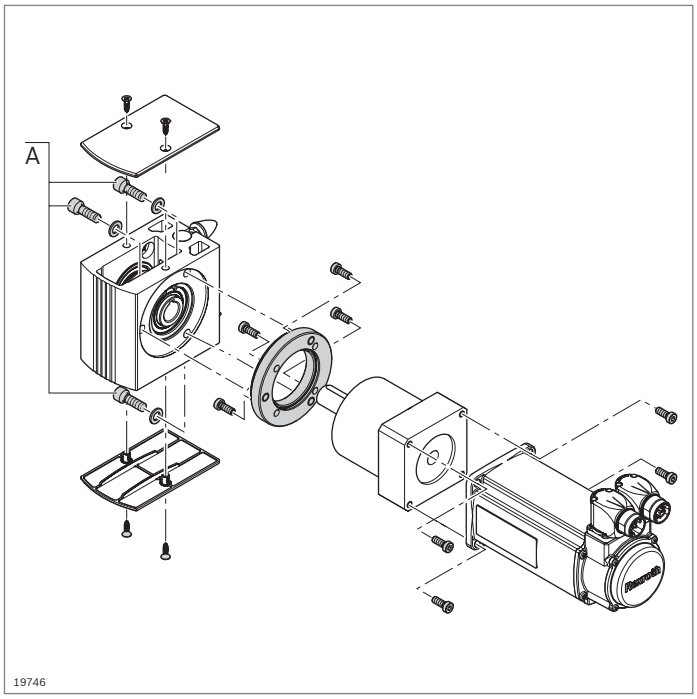

Flange

A flange is generally required for fixing the motor/gear unit in place. The connection dimensions for connection to the drive head are shown below. The connection to the motor/ gear unit depends on the model chosen in each case.

Also see connection dimensions of drive heads
LF6S (p. 13-9), LF6C (p. 13-14),
LF12C (p. 13-28), LF12S (p. 13-21),
LF20C (p. 13-42), LF20S (p. 13-35)

Fastening material flange (A)

Note regarding flange in self-build version. Adapt fastening material to suit differing flange thicknesses.

	LF6 (b = 14.5 mm)	LF12 (b = 20 mm)	LF20 (b = 20 mm)
Drive head – flange	ISO 4762 – M8x22 (3x)	ISO 4762 – M8x25 (3x)	ISO 4762 – M10x30 (3x)
	ISO 7092 – 8 (3x)	ISO 7092 – 8 (3x)	ISO 7092 – 10 (3x)

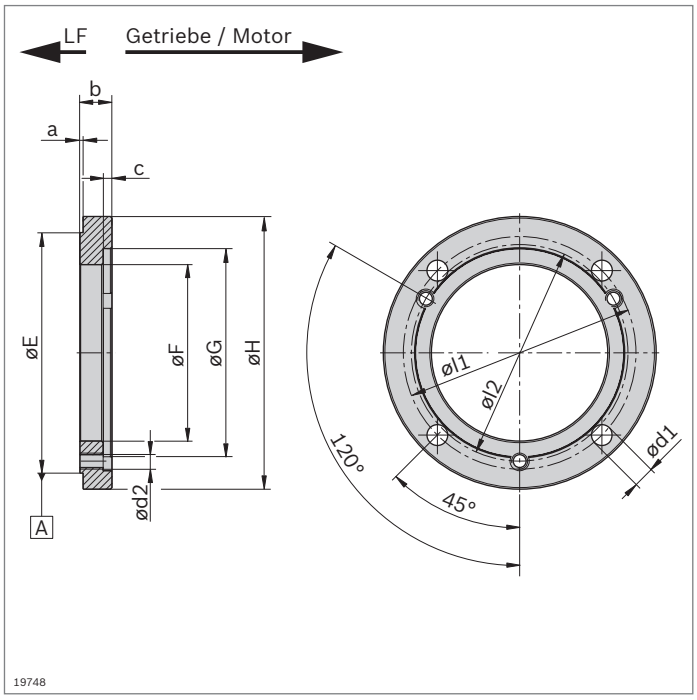

Drawing and dimensions for flange in self-build version. Customer-specific adjustment is necessary, depending on the motor and gear unit. The fastening material must be self-sourced.

Flange

Dimension parameter		LF6 (mm)	LF12 (mm)	LF20 (mm)
a		3.5 ± 0.15	3.5 ± 0.15	2 ± 0.15
b_{min} *)	// 0.05	*)	*)	*)
c*)		*)	*)	*)
E	A	Ø 88 -0.1/-0.3	Ø 111 -0.1/-0.3	Ø 150 -0.1/-0.3
F_{min} *)		Ø *)	Ø *)	Ø *)
G*)	◎ 0.05 A	Ø *)	Ø *)	Ø *)
H*)		Ø *)	Ø *)	Ø *)
l1*)		Ø *)	Ø *)	Ø *)
l2		Ø 78	Ø 100	Ø 135
d1*)		Ø *)	Ø *)	Ø *)
d2	⌖ Ø 0.25	M8	M8	M10

*) Dimension according to customer drive.
Notice: The values must be checked by the user.

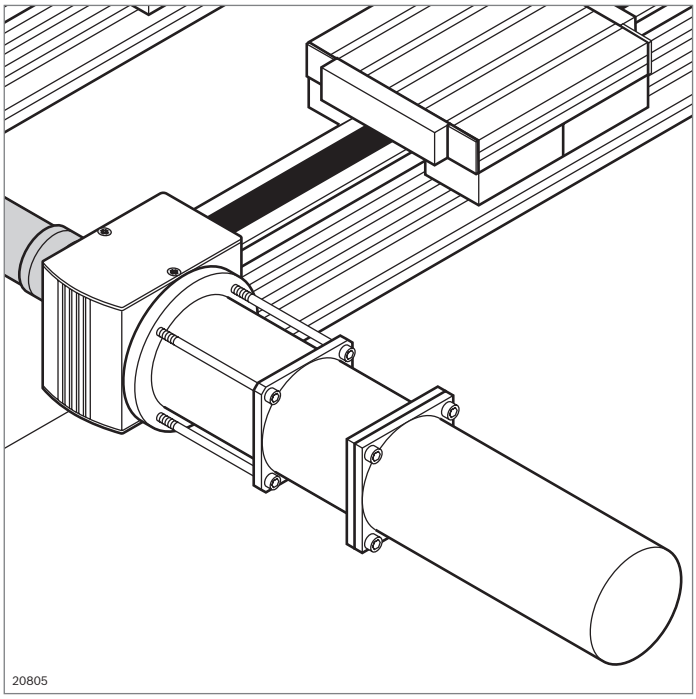

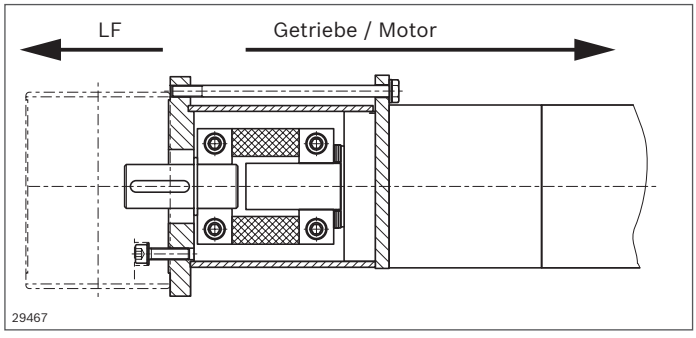

Alternative mounting with coupling

Instead of direct mounting over the section link, a coupling can be inserted. This allows any user truing errors to be rectified. The coupling must be designed and sourced by the customer.

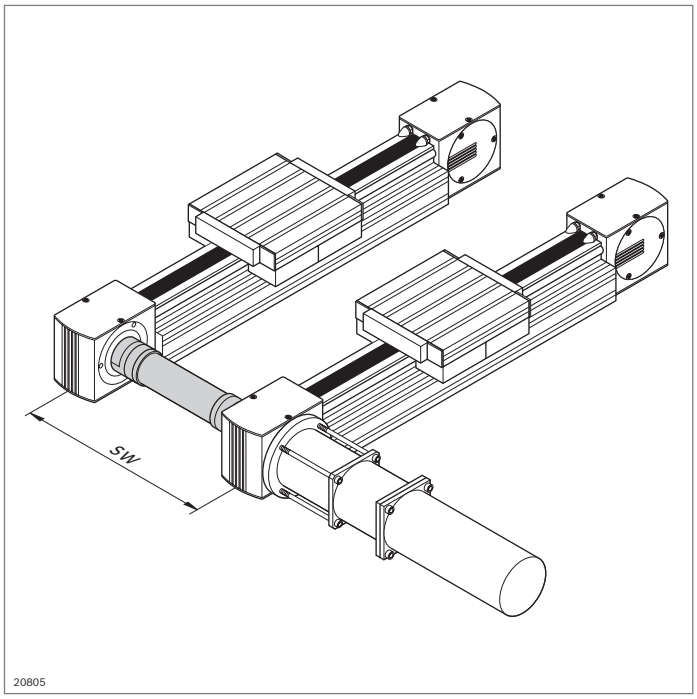

Plug-in shafts, synchronous shafts

Plug-in shafts

- Enable the installation of customized drive solutions

Plug-in shaft	No.
LF6	**3 842 526 893**
LF12	**3 842 526 894**
LF20	**3 842 526 895**

Material: Nickel-plated steel

SW = support separation

LF6

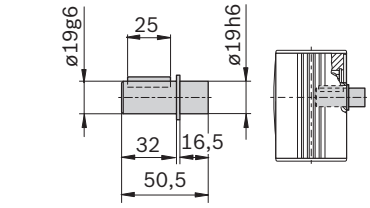

0,11 kg

LF12

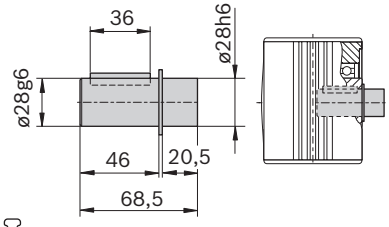

0,33 kg

LF20

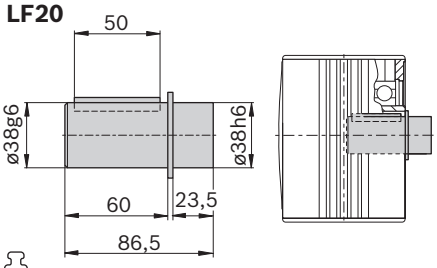

0,77 kg

19749

13

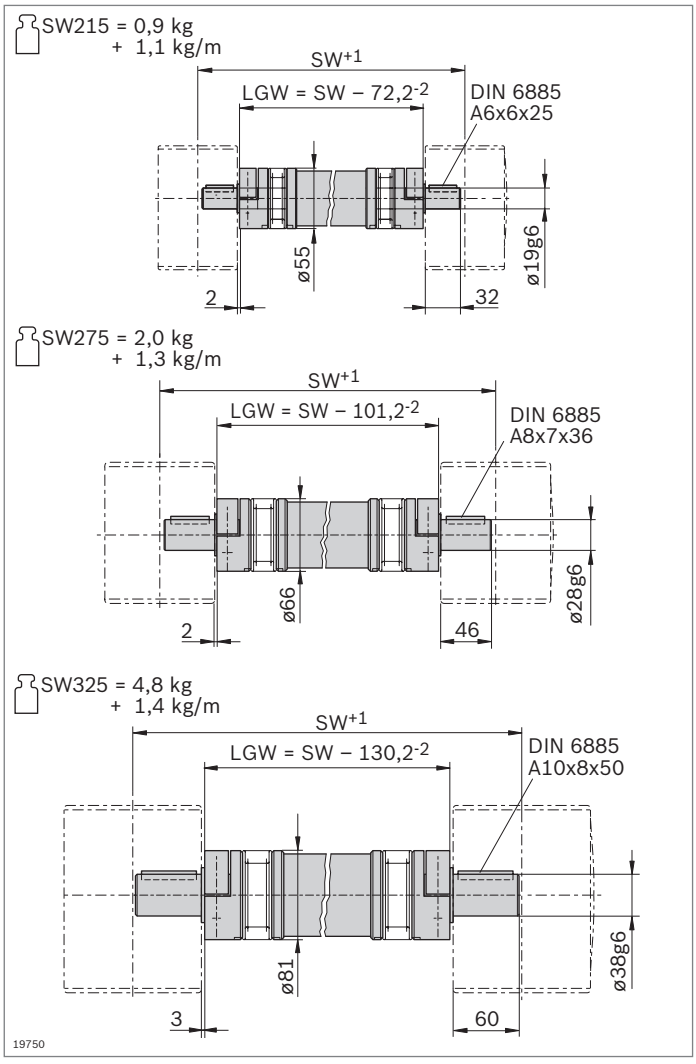

SW = support separation
LGW = length of synchronous shaft

Synchronous shafts

- Allow several linear guides to be operated synchronously while being driven by a common motor
- The synchronous shaft can be replaced without the drive heads having to be disassembled

The selection diagrams on page 13-55, 13-56 specify maximum values without safety margins.

Synchronous shaft	SW (mm)	No.
LF6	215 ... 3000	**3 842 994 811 / SW**
LF12	275 ... 3500	**3 842 994 812 / SW**
LF20	325 ... 3500	**3 842 994 813 / SW**

Material: Steel/aluminum

Technical data for roller, design, mounting

General technical data and calculations

Speed

$v_{max} = 5$ m/s

Acceleration

$a_{max} = 15$ m/s²

Temperature resistance

$-10\ °C < \vartheta < 40\ °C$

Lubrication

All cam roller guide bearings are delivered with built-in lubricating felts.

Condition on delivery

Ungreased (greasing with Klüber Isoflex Topas NCA 52;
see assembly instructions **3 842 527 226**)
Lubricating felts with reservoir are not greased.
Guide rods are ungreased.

Definition of dynamic load rating C

The radial loading of constant magnitude and direction which a linear rolling bearing can theoretically withstand for a nominal service life of 100 km distance traveled (acc. to ISO 14728 Part 1).

Note regarding maximum load F_{max}

The maximum loads apply to individual loads. Combining loads decreases the expected service life.

Definition and calculation of = nominal service life

The calculated service life which an individual linear rolling bearing – or a group of apparently identical rolling element bearings operating under the same conditions – can attain with a 90 % probability, based on the materials of normal manufacturing quality that are generally used today and under usual operating conditions (acc. to ISO 14728 Part 1) and optimal installation conditions.

Nominal service life at constant speed

$$L = \left(\frac{C}{F}\right)^3 10^5$$

$$L_h = \left(\frac{L}{2 \cdot s \cdot n_s \cdot 60}\right)$$

L = nominal service life (m)
L_h = nominal service life (h)
C = dynamic load capacity (N)
F = equivalent load (N)
s = length of stroke* (m)
n_S = stroke frequency (double stroke) (min^{-1})

*) For $s < 2 \cdot L_1$ (trolley length) load capacities are reduced.
Please consult us.

13

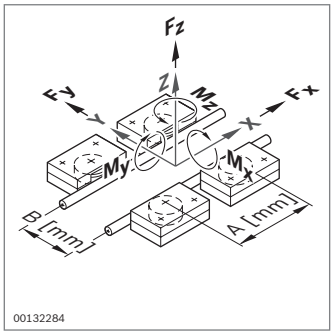

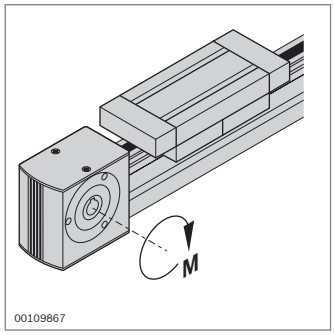

Load-dependent design

- The specified values are maximum single loads, which are reduced when loads are combined

Notice: If cumulative forces and moments arise in your application and load limits may be reached, please contact your Rexroth representative for consultation in design.

	A_{min} [1] (mm)	F_z (N)	F_y (N)	M_x (Nm)	M_z (Nm)	M_y (Nm)	v_{max} (m/s)	M_{max} (Nm)
LF6S	75	850	1400	13.6	0.7 · A[2]	0.4 · A[2]	5	9.5 / 7.6
LF6C	75	850	1400	0.4 · B[2]	0.7 · A[2]	0.4 · A[2]	5	15
LF12S	90	2000	3500	78.0	1.7 · A[2]	1.0 · A[2]	5	30
LF12C	90	2000	3500	1.0 · B[2]	1.7 · A[2]	1.0 · A[2]	5	30
LF20S	135	6000	12500	240.0	6.2 · A[2]	3.0 · A[2]	5	100
LF20C[3]	135	6000	12500	3.0 · B[2]	6.2 · A[2]	3.0 · A[2]	5	100

[1] A_{min} = Length guide bearing
[2] Notice: A (spacing of support wheels, see image above) in mm; see below for calculation of B (track width)
[3] Maximum values (profile slot load-bearing capacity) are only reached with the following profiles: 45x270; 60x90; 90x90; 90x180; 90x360 (see p. 18-15)

Do not exceed the maximum loading of the screwed connections for rails, carriages and fastenings.
Ensure sufficiently stable basic profile and respective substructure.

Take account of the general service life of lubricants!

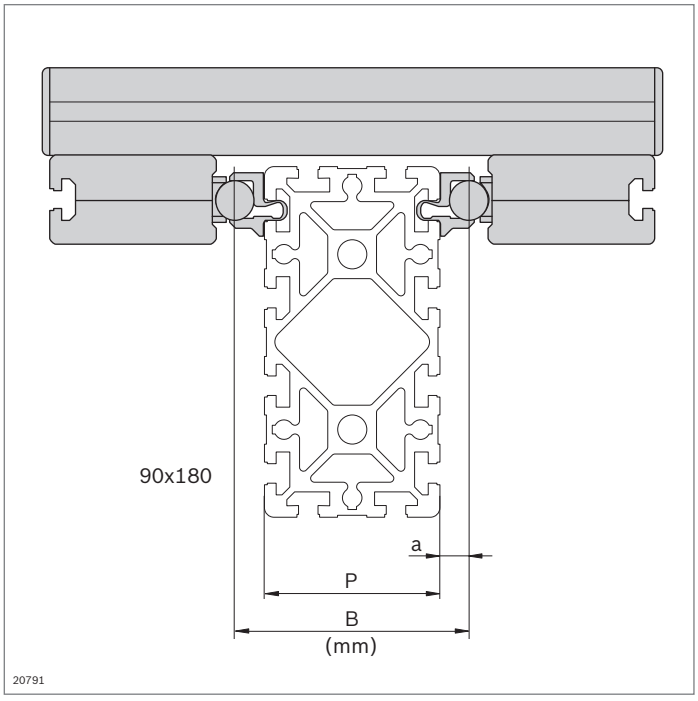

Calculating the track width B

B = P + 2 · a

B = track width (in mm)
P = profile width (in mm)
a = rod spacing (in mm)

LF ... C

Values for a: for LF6C = 9.5 mm (p. 13-13)
for LF12C = 9 mm (p. 13-25)
for LF20C = 15 mm (p. 13-39)

LF ... S

Values for a: for LF6S = 40 – 6 = 34 mm (p. 13-8)
for LF12S = 90 – 12 = 78 mm (p. 13-18)
for LF20S = 100 – 20 = 80 mm (p. 13-32)

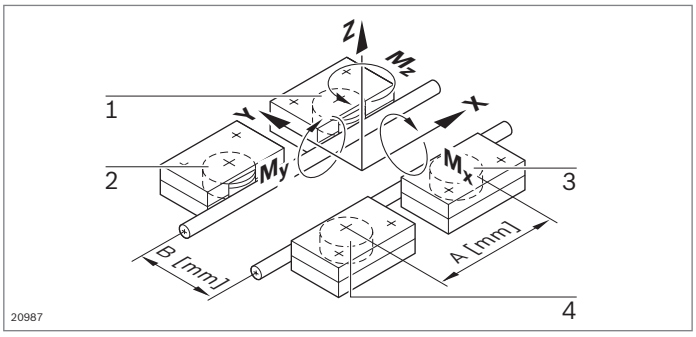

Cam roller 1:

$$F_r = -(\frac{F_y}{2}) - (\frac{M_z}{A})$$

$$F_a = (\frac{F_z}{4}) + (\frac{M_x}{2 \cdot B}) - (\frac{M_y}{2 \cdot A})$$

Cam roller 3:

$$F_r = +(\frac{F_y}{2}) + (\frac{M_z}{A})$$

$$F_a = (\frac{F_z}{4}) - (\frac{M_x}{2 \cdot B}) - (\frac{M_y}{2 \cdot A})$$

Cam roller 2:

$$F_r = -(\frac{F_y}{2}) + (\frac{M_z}{A})$$

$$F_a = (\frac{F_z}{4}) + (\frac{M_x}{2 \cdot B}) + (\frac{M_y}{2 \cdot A})$$

Cam roller 4:

$$F_r = +(\frac{F_y}{2}) - (\frac{M_z}{2})$$

$$F_a = (\frac{F_z}{4}) - (\frac{M_x}{2 \cdot B}) + (\frac{M_y}{2 \cdot A})$$

Table 1: Load factors for cam rollers

	Load case: $F_r \geq \lvert F_a \rvert$				Load case: $F_r < \lvert F_a \rvert$			
	x	y	x_0	y_0	x	y	x_0	y_0
LF6	1	3.1	1.2	3.5	0.5	3.6	1	3.7
LF12	1	4.2	1.2	5.2	0.5	4.7	1	5.4
LF20	1	4	1.2	4.9	0.5	4.5	1.1	5

Table 2: Cam rollers - load capacities

	C for 10^5 m (N)	C_o (N)
LF6	3670	2280
LF12	8300	5000
LF20	23400	16600

Calculation of load on bearing for a trolley

Loading of the individual rollers

- A mm: Spacing of the rollers' rotational axes
- B mm: Center-to-center distance between the guide rods
- Only compressive forces can be transferred between cam rollers and guide rods in the radial direction. The following therefore applies in respect of radial forces: $F_r \leq 0$: $F_r = 0$
- Cam rollers can be loaded equally in both directions. Therefore force F_a is sufficient for calculating P and P_0

Equivalent dynamic and static loads

To calculate the service life of a cam roller guide, the roller with the greatest load has to be considered.
The following must be determined:

$P = \max (P_1,....,P_4)$

$P_0 = \max (P_{01},...,P_{04})$

Equivalent dynamic load P

$$P = x \cdot |F_r| + y \cdot |F_a|$$

Equivalent static load P_0

$$P_0 = x_0 \cdot |F_r| + y_0 \cdot |F_a|$$

F_r (N): radial load of the roller
The following applies: $F_r \leq 0$: $F_r = 0$

F_a(N): axial load of the roller

x, x_0: Radial factor (table 1)
y, y_0: Axial factor (table 1)

C: dynamic load capacity (table 2)
C_0: static load capacity (table 2)

Static safety values: $S_0 = (\frac{C_0}{P_0})$

$S_0 \geq 4$ recommended!

13

Size selection

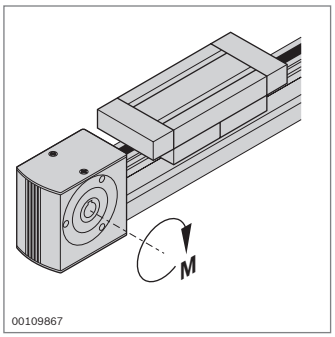

Determining the forces and moments which arise

$F_{x\,dyn}$, $F_{y\,dyn}$, $F_{z\,dyn}$ [1)]
$M_{x\,dyn}$, $M_{y\,dyn}$, $M_{z\,dyn}$

[1)] $F_{Z\,dyn}$ includes the weight of the trolley

All the influences must be considered, e.g.:

- Net mass and load
- Acceleration forces and moments
- Process forces and moments
- Loads caused by dampers and/or stops

Example

m = 30 kg a = 2.5 m/s²;
L_1 = 150 mm L_2 = 5000 mm
g = 9.81 m/s²

$F_{z\,dyn}$ = m · g = 294 N
$M_{y\,dyn}$ = m · a · 70 mm = 5.25 Nm

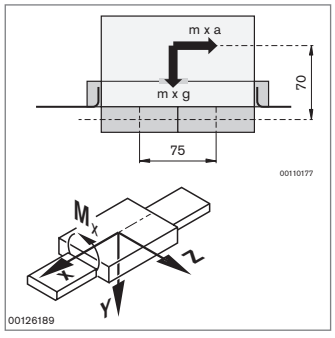

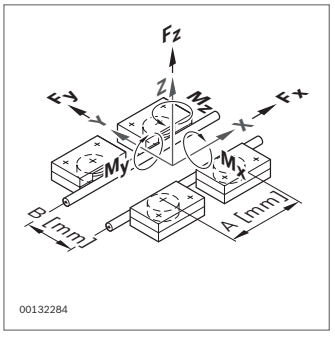

Determining the permissible forces and moments

For values see p. 13-51

Example of LF 6 S, LF 6 C

$F_{z\,dyn\,zul}$ = 850 N > $F_{z\,dyn}$ = 294 N
$M_{y\,dyn\,zul}$ = 0.4 · A = 0.4 · 75 mm
= 30 Nm > $M_{y\,dyn}$ = 5.25 Nm

Selection of the suitable size

$F_{x,\,y,\,z\,dyn}$ < $F_{x,\,y,\,z\,dyn\,zul}$!
$M_{x,\,y,\,z\,dyn}$ < $M_{x,\,y,\,z\,dyn\,zul}$!

If F and M are cumulative:
In case of higher load, the next size is to be used. In case of doubt, please contact your Rexroth representative for consultation in design.

Example

$F_{z\,dyn}$ = 294 N < $F_{z\,dyn\,zul}$ = 850 N !
$M_{y\,dyn}$ = 5.25 Nm < $M_{y\,dyn\,zul}$
= 30 Nm !

Calculating the drive

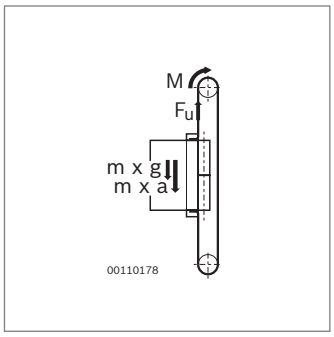

Peripheral force F_u

$$F_u = m \cdot a + m \cdot g + F_0 + \mu \cdot m \cdot g$$
$$F_u \leq F_{u\,zul}\ !$$

F_0: frictional force on return units
μ : coefficient of friction of the guide see table below.

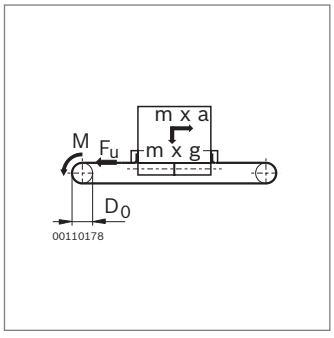

Alternative calculation formula

$$F_u = m \cdot a + F_0 + \mu \cdot m \cdot g \leq F_{u\,zul}\ !$$

Example of LF6C
m = 30 kg; a = 2.5 m/s²
$F_u = (30 \cdot 2.5)N + 10\ N + (0.025 \cdot 30 \cdot 9.81)N$
$F_u = 75\ N + 10\ N + 0.025 \cdot 294\ N$
$F_u = 92.35\ N < F_{u\,zul} = 600\ N$!

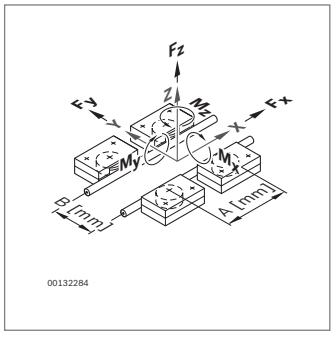

Required drive torque M

$$M = ½ \cdot D_0 \cdot F_u \leq M_{zul}\ !$$

Example
$M = ½ \cdot 50.94\ mm \cdot 92.35\ N$
$= 2.4\ Nm$
$M = 2.35\ Nm \leq M_{zul}$
$= 15\ Nm$!

13

	v (m/s)	$F_{u\,zul}$ (N)	M_{zul} (Nm)	F_0 (N)	μ	D_0 (mm)	$D_0 \times \pi$ (mm)
LF6S	≤ 2.0	500	9.5	10	0.025	38.21	120
LF6S	2.01 ... 5.0	400	7.6	10	0.025	38.21	120
LF6C	≤ 5.0	600	15.0	10	0.025	50.94	160
LF12S	≤ 5.0	820	30.0	30	0.020	73.20	230
LF12C	≤ 5.0	820	30.0	30	0.020	73.20	230
LF20S	≤ 5.0	2000	100.0	35	0.015	101.86	320
LF20C	≤ 5.0	2000	100.0	35	0.015	101.86	320

F_0: frictional force on return units; μ : coefficient of friction

Checking the selected size

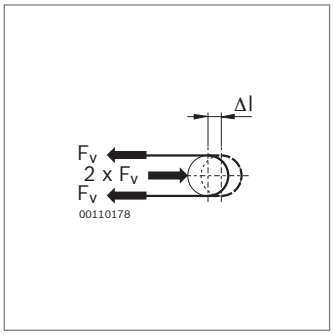

Preload force F_v of toothed belt

$0.5 \cdot F_u \leq F_v \leq F_u$
Recommendation: $F_v = 0.5 \cdot F_u$

Example
F_u = 92.35 N
F_v = 50 N

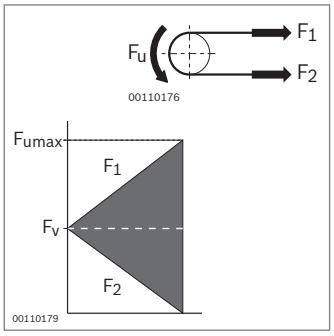

Maximum toothed belt force $F_{1\,max}$

$F_{1\,max} = F_v + 0{,}5 \cdot F_u \leq F_{1\,zul}$!
$F_{2\,min} = F_v - 0.5 \cdot F_u > 0$!

Example of LF6C
$F_{1\,max}$ = 50 N + 0.5 · 92.35 N
$F_{1\,max}$ = 96.18 N < $F_{1\,zul}$ = 900 N !
$F_{2\,min}$ = 50 N – 0.5 · 92.35 N
$F_{2\,min}$ = 3.825 N > 0 !

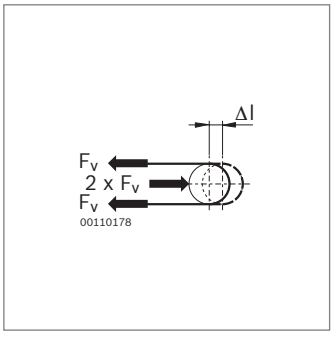

Required preload length ΔI

$\Delta I = 0.5 \cdot F_v \cdot L / C_{spez} \leq \Delta I_{max}$!

Example
L = 2 · L_2 – L_1 + 400 mm
L = 10250 mm
ΔI = 0.5 · 50 N · 10 250 mm / 420000 N
ΔI = 0.8 mm < ΔI_{max} = 13 mm !

	$F_{1\,zul}$ (N)	C_{spez} (N)	ΔI_{max} (mm)	L (mm)	Page
LF6S	750	315000	11	2 · L_2 – L_1 + 360	13-6
LF6C	900	420000	13	2 · L_2 – L_1 + 400	13-11
LF12S	1230	1250000	16	2 · L_2 – L_1 + 630	13-16
LF12C	1230	1250000	16	2 · L_2 – L_1 + 630	13-23
LF20S	3000	1870000	23	2 · L_2 – L_1 + 780	13-30
LF20C	3000	1870000	23	2 · L_2 – L_1 + 780	13-37

C_{spez}: Belt stiffness;
L: Toothed belt,
see also LF6S (p. 13-6), LF6C (p. 13-11), LF12S (p. 13-16), LF12C (p. 13-23), LF20S (p. 13-30), LF20C (p. 13-37)

Dimensioning of synchronous shafts

			LF6	LF12	LF20
Support separation SW	horizontal		215 ... 3000 mm	275 ... 3500 mm	325 ... 3500 mm
	vertical	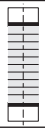	215 ... 2000 mm	275 ... 2000 mm	325 ... 1100 mm
Nominal torque			max. 30 Nm	max. 60 Nm	max. 150 Nm
Permitted rpm			Diagram 3 (p. 13-56) **max. 0.7 · n_k**	Diagram 3 (p. 13-56) **max. 0.7 · n_k**	Diagram 3 (p. 13-56) **max. 0.7 · n_k**
Elasticity	axial		max. 2 mm	max. 3 mm	max. 4 mm
	lateral		Diagram 4 (p. 13-56)	Diagram 4 (p. 13-56)	Diagram 4 (p. 13-56)
	Rotation angle		Diagram 5 (p. 13-56)	Diagram 5 (p. 13-56)	Diagram 5 (p. 13-56)

Diagram 1: Torsion stiffness

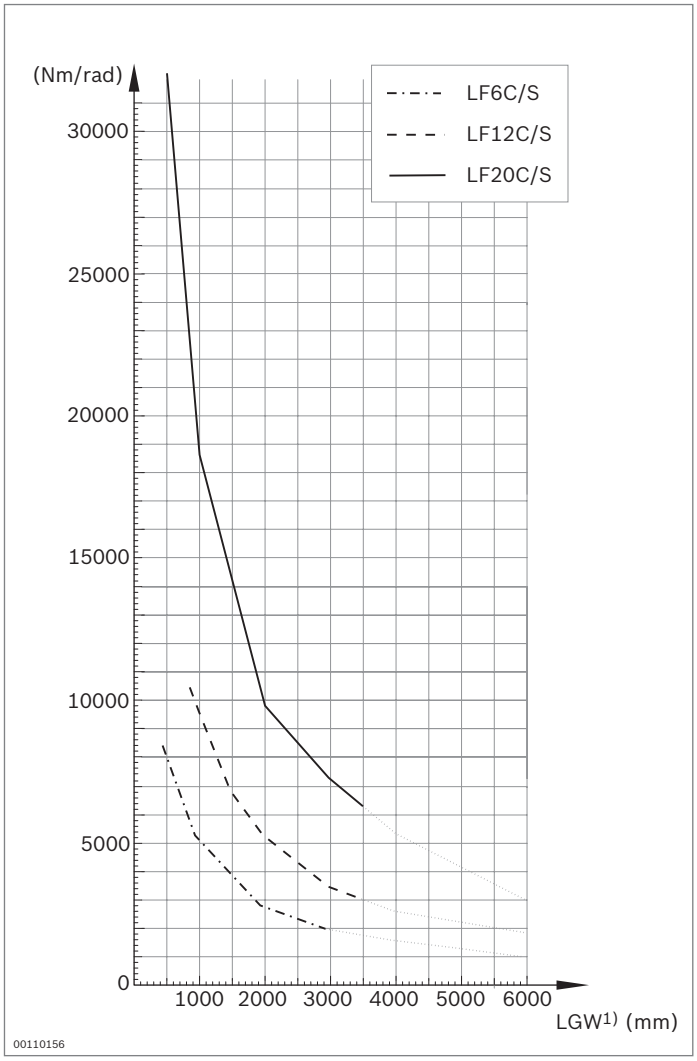

1) Length synchronous shaft LGW

LF6	LGW = SW - 72
LF12	LGW = SW - 101
LF20	LGW = SW - 130

13

Diagram 2: Mass inertia

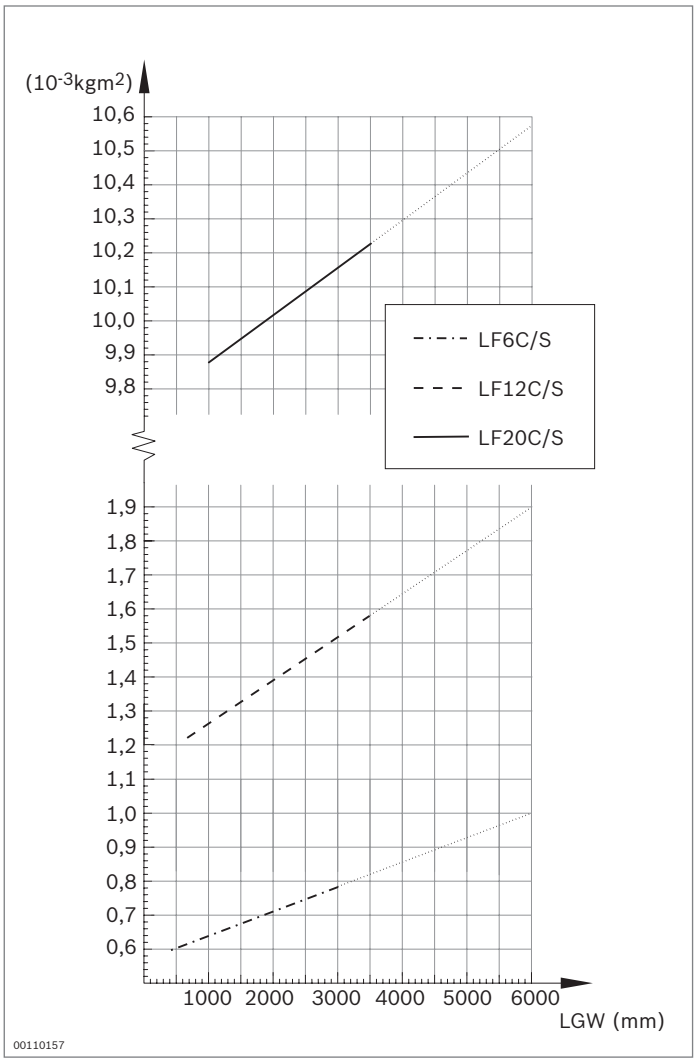

Diagram 3: Critical rpm due to bending n_k

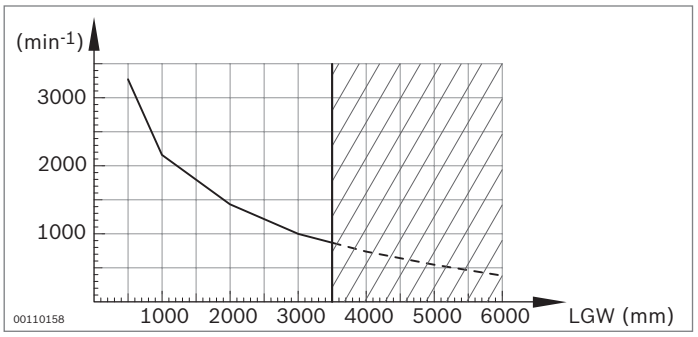

Diagram 4: Lateral offset



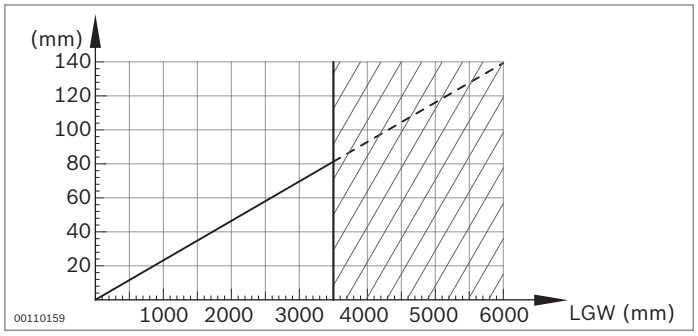

Aligned shafts are recommended.

Diagram 5: Rotation angle



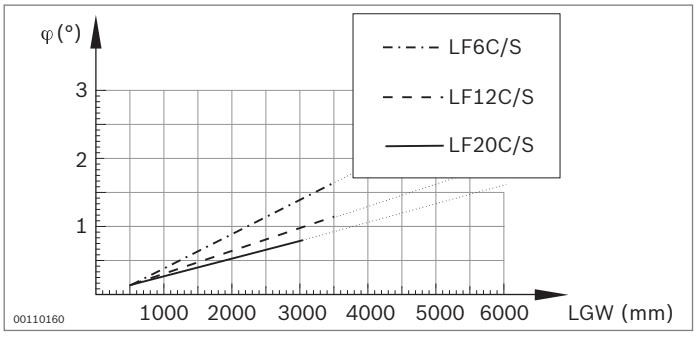

Tools

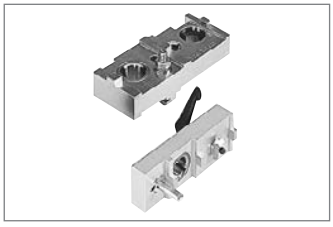

Drilling jigs (p. 14-2)

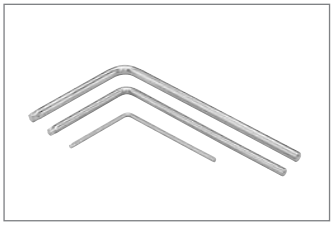

Torx® offset screwdriver (p. 14-5)

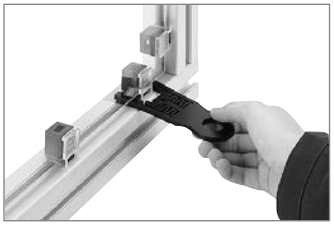

Variofix remover, Flexible grinder (p. 14-6)



Beveling shears (p. 14-6)

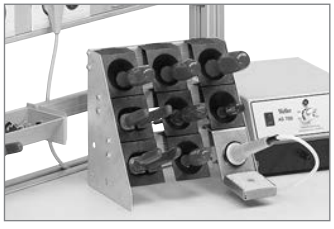

Tool shelf, tool holder (p. 14-7)

Let us send you information on the complete product range of Bosch power tools!

Robert Bosch GmbH
Geschäftsbereich Elektrowerkzeuge
PO Box 10 01 56
D-70745 Leinfelden-Echterdingen
http://www.bosch-pt.com

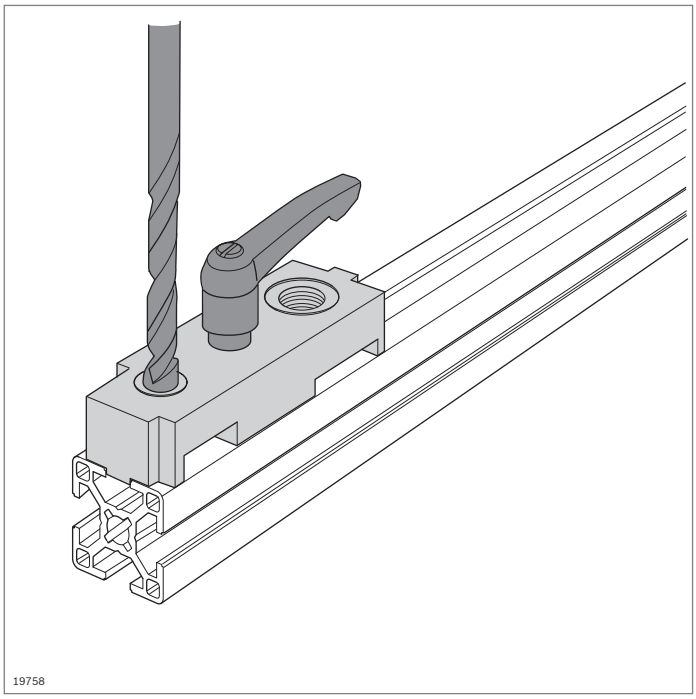

Drilling jigs



- For simple drilling of standard holes for the Rexroth range of connectors
- Stopping surfaces and edges for precise hole positioning
- Lockable

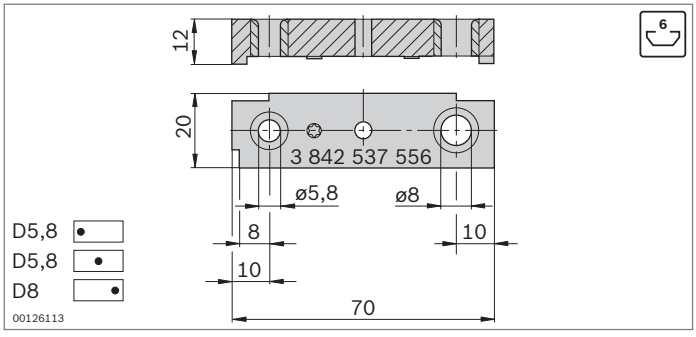

Drilling jigs – slot 6 mm

- For through-holes (ø5.8) for hexagonal-star socket screwdrivers T25
- For fastening holes (ø8) for quick connectors

Drilling jig		No.	FS
Slot 6 mm		**3 842 537 556**	FS1
Material:	Aluminum		
Scope of delivery:	Incl. fastening material (FS)		

FS1

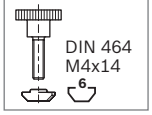

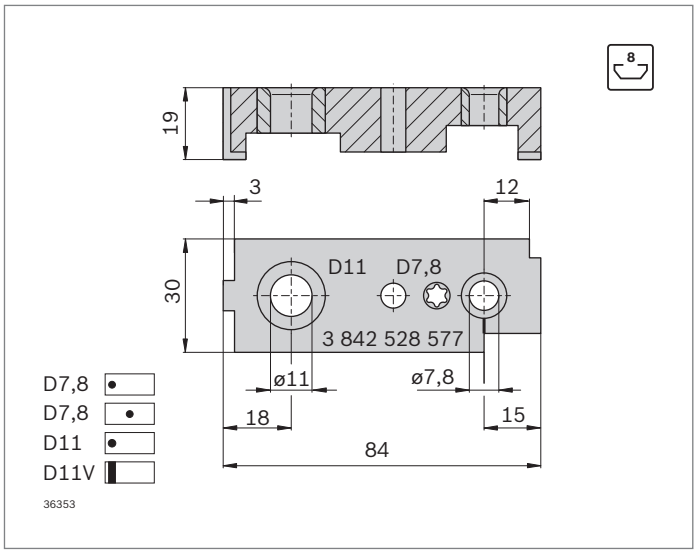

Drilling jigs – slot 8 mm

- For through-holes (ø7.8) for hexagonal-star socket screwdrivers T40
- For fastening holes (ø11) for quick connectors

Drilling jig	No.	FS
Slot 8 mm	**3 842 528 577**	FS2

Material: Steel; galvanized
Scope of delivery: Incl. fastening material (FS)

FS2

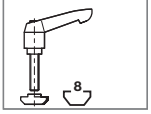

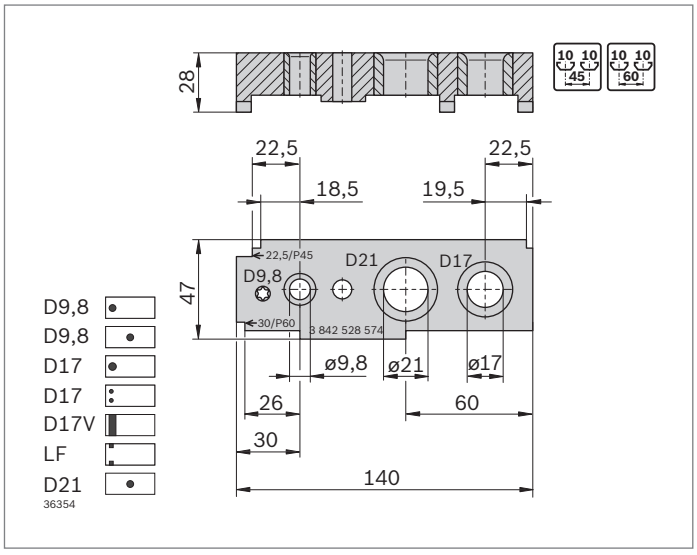

Drilling jigs – slot 10 mm, modular dimensions 45, 60

- For fastening holes (ø17) for bolt connectors, quick connectors, and threaded sleeves
- For through-holes (ø9.8) for hexagonal-star socket screwdrivers T50
- For counterbores (ø21) for pneumatic connections

Drilling jig	No.	FS
Slot 10 mm, modular dimensions 45, 60	**3 842 528 574**	FS3

Material: Steel; galvanized
Scope of delivery: Incl. fastening material (FS)

FS3

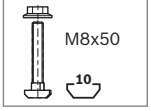

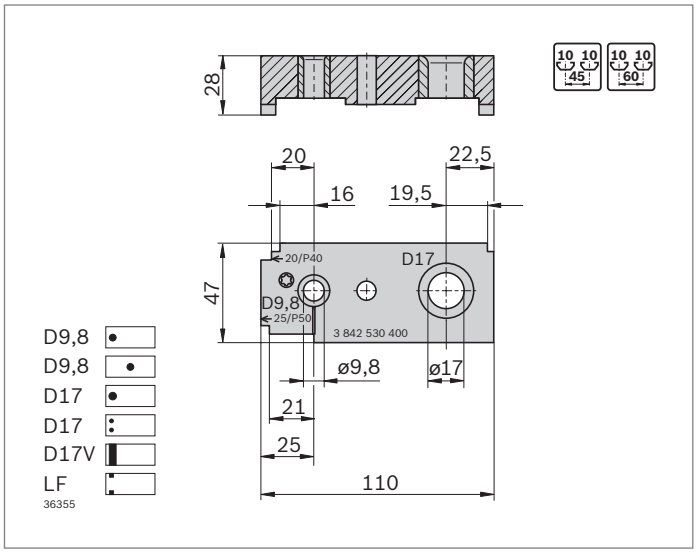

Drilling jigs – slot 10 mm, modular dimensions 40, 50

- For through-holes (ø9.8) for hexagonal-star socket screwdrivers T50
- For fastening holes (ø17) for bolt connectors, quick connectors, and threaded sleeves

Drilling jig	No.	FS
Slot 10 mm, modular dimensions 40, 50	**3 842 530 400**	FS3

Material: Steel; galvanized
Scope of delivery: Incl. fastening material (FS)

FS3

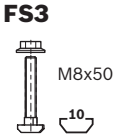

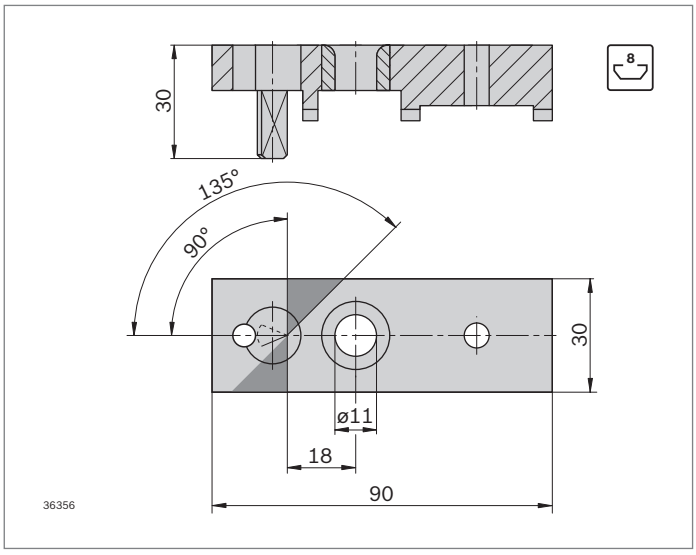

Drilling jig for diagonally sawn profiles – slot 8 mm

▶ For fastening holes (ø11) for bendable quick connectors

Drilling jig	No.	FS
Slot 8 mm – diagonally sawn profiles	**3 842 516 729**	FS2

Material: Aluminum
Scope of delivery: Incl. fastening material (FS)
Also see bendable quick connector (p. 3-57)

FS2

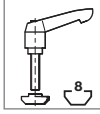

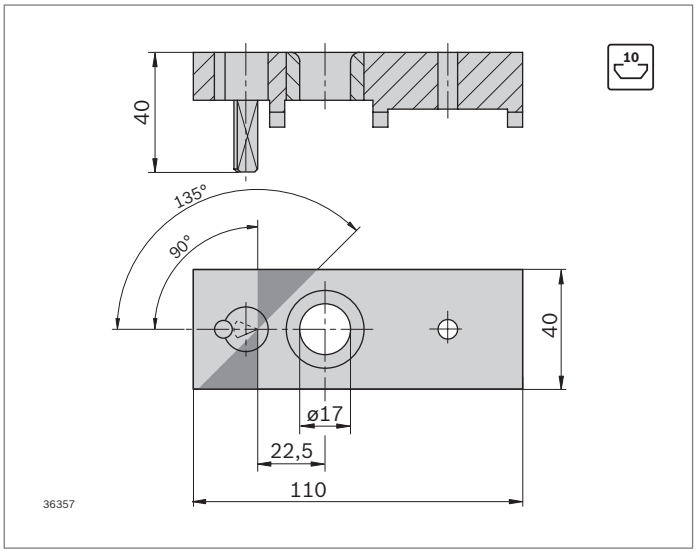

Drilling jig for diagonally sawn profiles – slot 10 mm

▶ For fastening holes (ø17) for bendable quick connectors

Drilling jig	No.	FS
Slot 10 mm – diagonally sawn profiles	**3 842 516 731**	FS4

Material: Aluminum
Scope of delivery: Incl. fastening material (FS)
Also see bendable quick connector (p. 3-57)

FS4

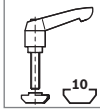

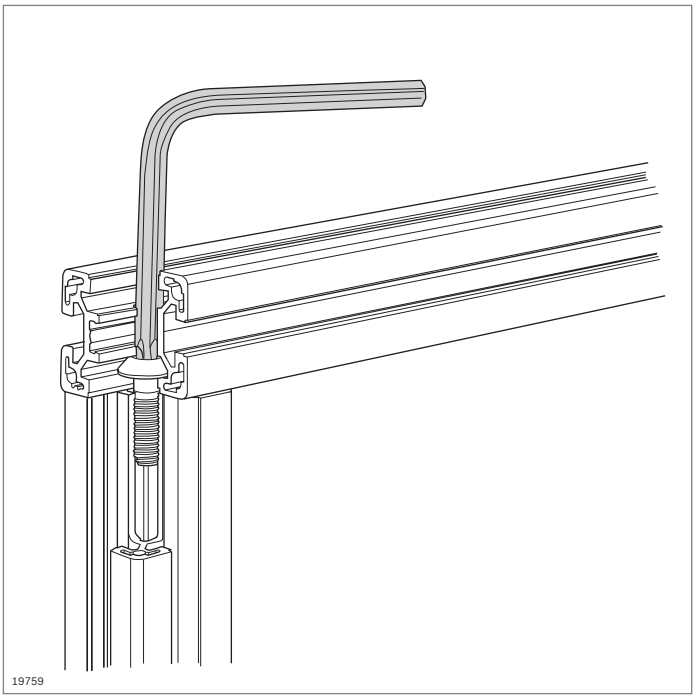

Torx® offset screwdriver



- Offset screwdriver for the central bolts (p. 3-41):
  - S6x16-**T25**
  - S8x25-**T40**
  - S12x30-**T50**, M12x30-**T50**
- Long shank for easy screw head access

T25

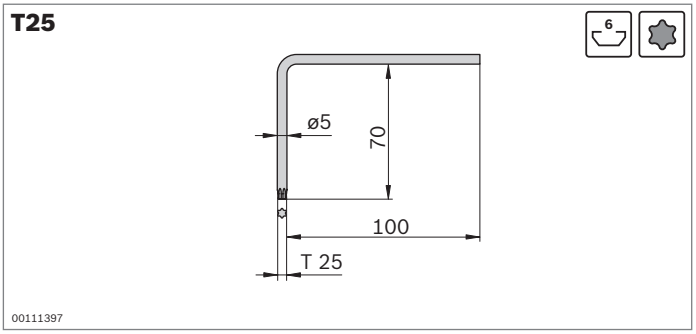

Offset screwdriver T25		No.
	5	**3 842 528 590**
Material:	Chrome vanadium steel	

T40

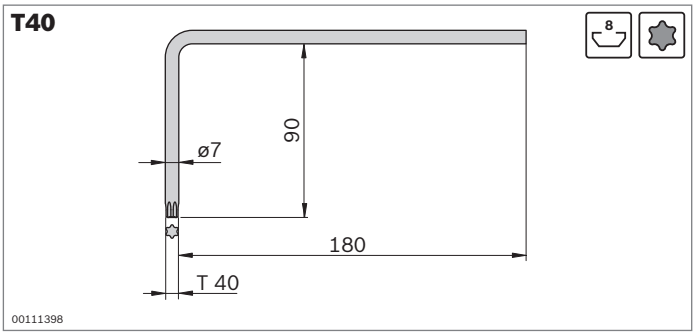

Offset screwdriver T40		No.
	5	**3 842 528 588**
Material:	Chrome vanadium steel	

T50

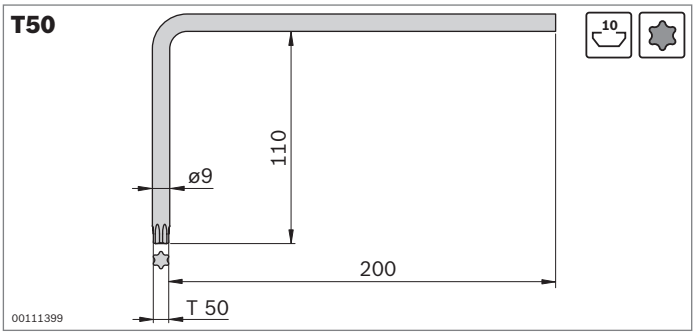

Offset screwdriver T50		No.
	5	**3 842 528 586**
Material:	Chrome vanadium steel	

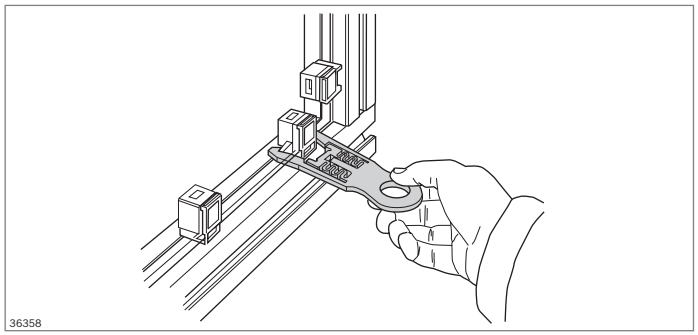

Variofix remover

- For fast, easy removal of the Variofix snap-in clip (p. 7-6), even in hard-to-reach places
- The Variofix remover is pushed onto the snap-in clip of the Variofix block so that it spreads the teeth of the clip and can then be removed together with the clip

Variofix remover			No.
		10	**3 842 526 589**
Material:	PA		

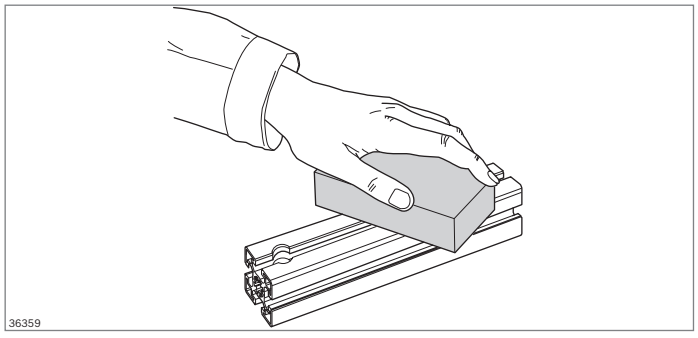

Flexible grinder for anodized surfaces

- Hand grinder for removing light soiling and minor scratches
- Handy grindstone made of flexible base material containing abrasive agents
- Long service life thanks to automatic, continual surface renewal, like an eraser
- Suitable for all natural-colored, anodized surfaces, e.g. also for aluminum windows and doors

Flexible grinder for anodized surfaces		No.
		3 842 518 650
Material:	Silicon carbide 60 % polyurethane 40 %	

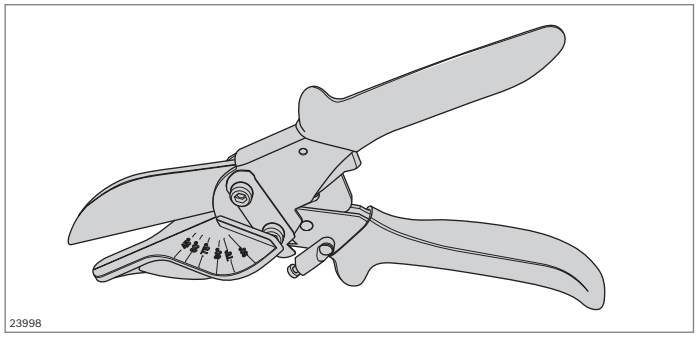

Miter cutter

- For length-trimming of plastic profiles, e.g. slot cover profiles

Miter cutter	No.
	3 842 547 982

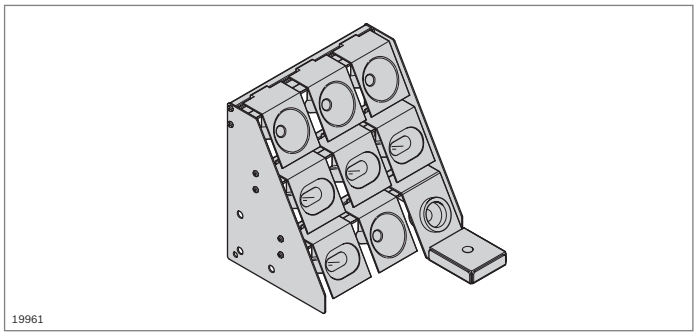

Tool shelf
Tool holder

- Tool shelf and tool holder for ergonomic and handy positioning of tools at the workstation
- Tool shelf can be individually equipped
- Accessories: Container mount (p. 2-61)

Tool shelf	ESD	No.
	ESD	**3 842 554 909**
Material:	Side parts: Sheet aluminum Suspension profile: Aluminum; anodized	

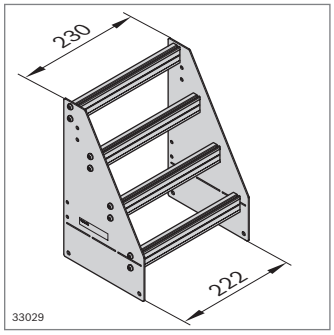

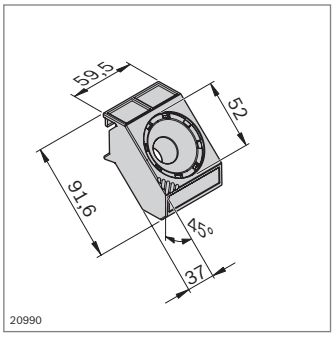

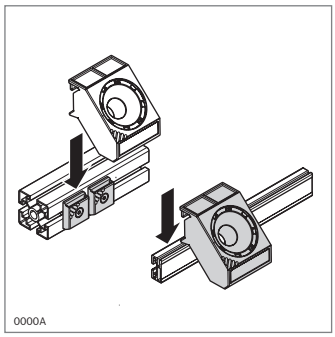

Tool holder D52 for bucket trays D52-9 and D52-15

Tool holder D52	ESD	No.
	ESD	**3 842 544 832**

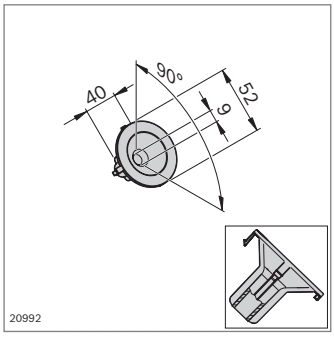

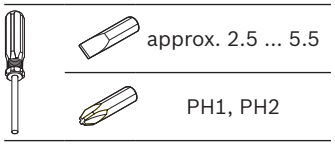

Bucket tray D52-9 (without base)	ESD	No.
	ESD	**3 842 544 834**

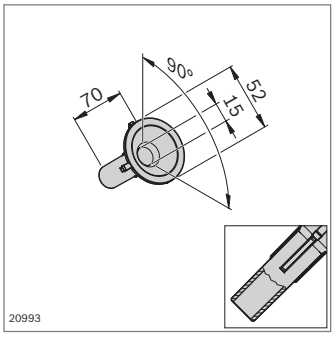

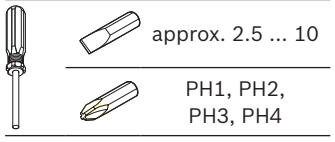

Bucket-tray D52-15 (with base)	ESD	No.
	ESD	**3 842 544 835**

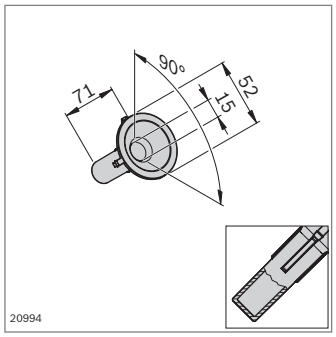

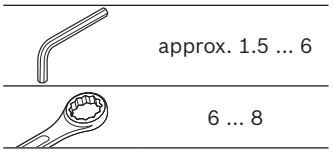

Bucket-tray D52-15 (with base)	ESD	No.
	⚠	3 842 544 836

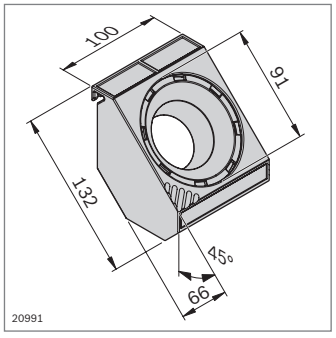

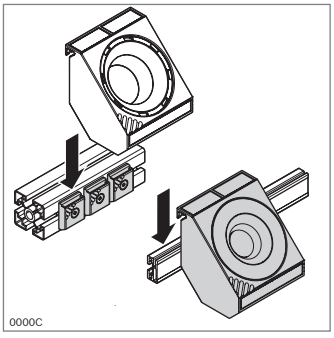

Tool holder D91 for bucket trays D91-32, D91 Oval53 L100 and D91 Oval53 L136

Tool holder D91	ESD	No.
	⚠	3 842 544 833

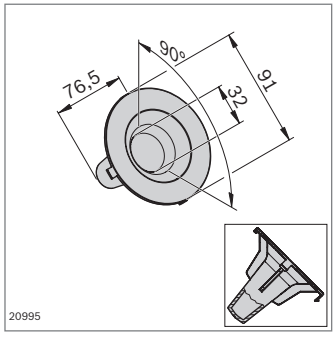

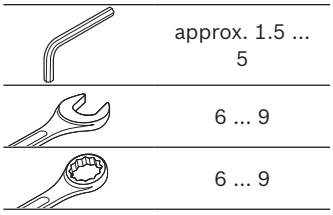

Bucket-tray D91-32 (with base)	ESD	No.
	⚠	3 842 544 837

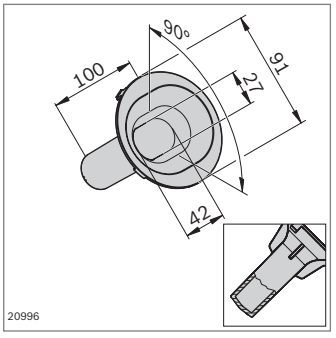

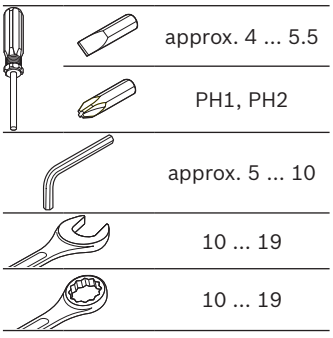

Bucket-tray D91 Oval53 L100 (with base)	ESD	No.
	⚠	3 842 546 744

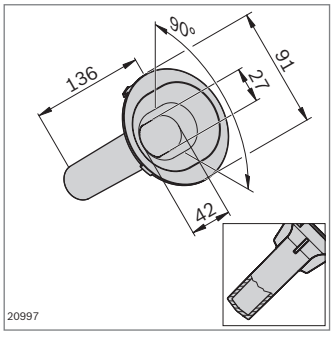

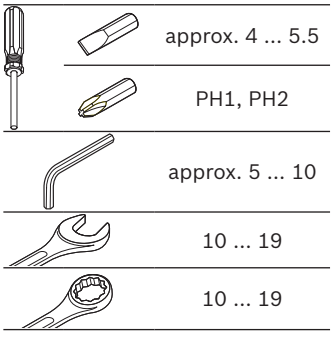

Bucket-tray D91 Oval53 L136 (with base)	ESD	No.
	⚠	3 842 546 745

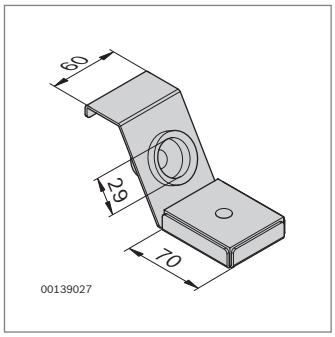

Tool holder for soldering irons	ESD	No.
	⏚	**3 842 514 524**

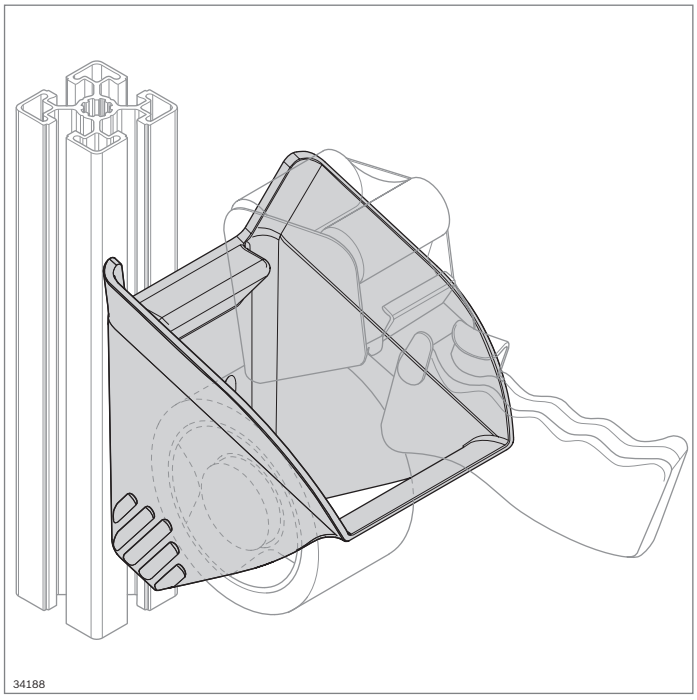

Tool holder TAPE 50 mm



- Tool holder for tape dispenser with a width of 50 mm
- Time savings of 10 % to 20 % based on MTM, achievable with
  - Defined place for faster reaching and picking
  - Docking aids for easy, ergonomic depositing
- Supports 5S principles for order and cleanliness at the workstation via defined place

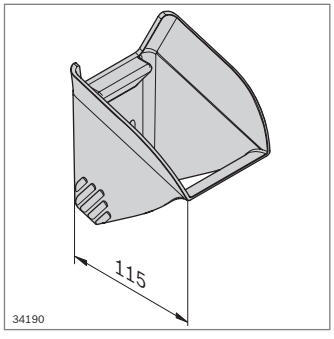

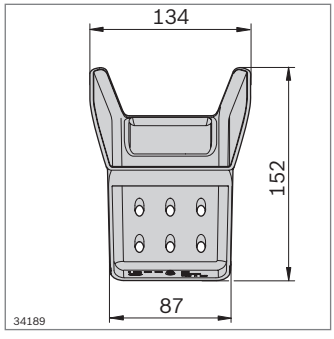

Tool holder TAPE 50 mm	ESD	No.
	⏚	**3 842 555 673**
Material:	PA 6; black	
Scope of delivery:	Incl. fastening material for fastening in 8 mm or 10 mm slots	

FiFo station



Guide rail (p. 15-2)

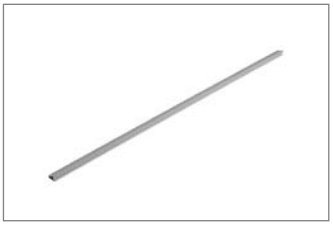

Adapter (p. 15-3)



Right end cap, small (p. 15-3)



Left end cap, small (p. 15-3)



End cap, large (p. 15-3)



FiFo station

- Components for constructing a FiFo station for material shuttles
- Clearly organized and highly transparent production operations through having standardized delivery routes
- Modular system lets you adapt the layout to your needs and to your available space

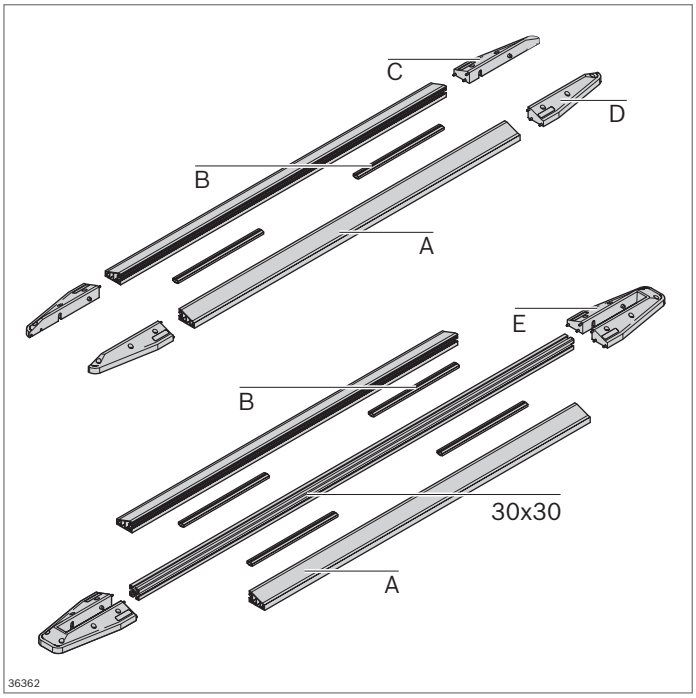

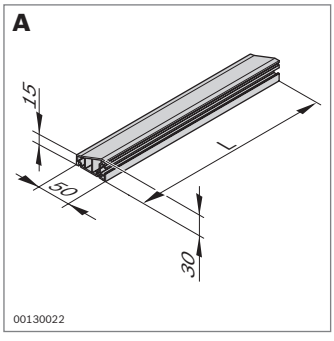

- Adhesive strips for fastening to floor
- Screw fitting to floor possible at end caps

Guide rail		L (mm)		No.
A		1200	10	**3 842 540 012**
		2400	10	**3 842 539 894**
Material:	PVC, yellow			

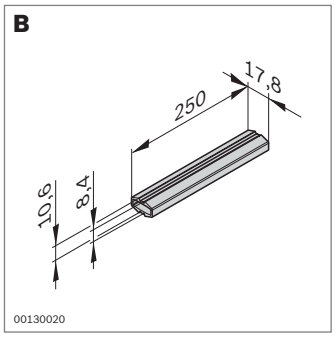

- For the parallel connection of guide rails, or a guide rail with a 30x30 profile

Adapter		No.
B	20	**3 842 539 898**
Material:	PP	

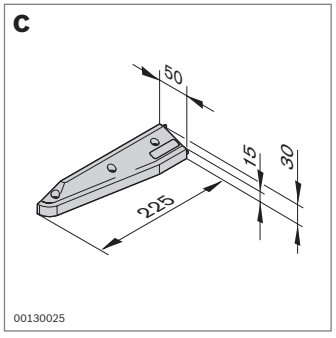

- For use as a jointing aid and for fastening the guide rails to the floor

Right-hand end cap, small		No.
C	10	**3 842 539 895**
Material:	PA 6; black	

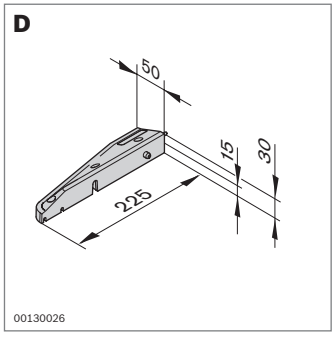

- For use as a jointing aid and for fastening the guide rails to the floor

Left-hand end cap, small		No.
D	10	**3 842 539 896**
Material:	PA 6; black	

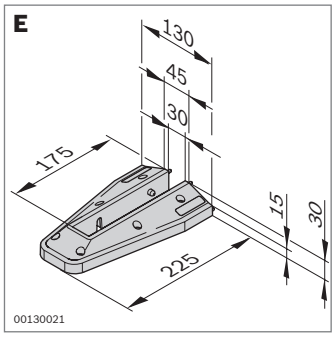

- For installing a 30x30 profile between two guide rails
- The 30 mm profile can be used to construct flow rack systems, information boards, and height limits. Since the guide rails are flat-sided, setup can be done using a wide profile (40, 45, 50)

Required accessories:

- Profile 30x30 (p. 2-16)

End cap, large		No.
E	10	**3 842 539 897**
Material:	PA 6; black	

15

Components for lateral guides



Profile rails, slide rails (p. 16-3)



Holder, fixed (p. 16-6)



Holder, variable (p. 16-8)

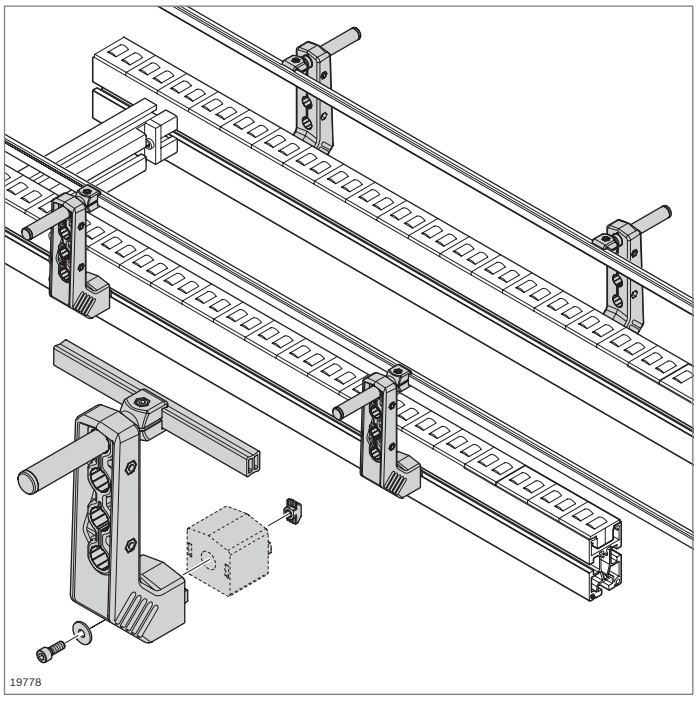

Components for lateral guides

- Wide variety of profile rail and holder combinations for individual solutions
- Easy to clean
- Robust
- Only one tool required for adjustment
- Interface slot 10 mm

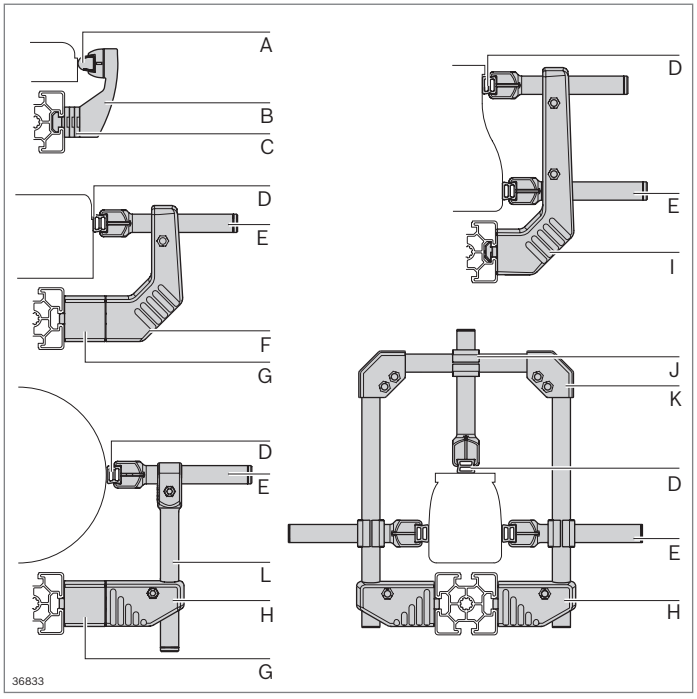

Components		Page
A	Profile rail 17x17.5	16-4
B	Holder, fixed	16-6
C	Spacer plate	16-6
D	Aluminum profile rail	16-3
E	Clamping holder C L100	16-9
F	Holder L134	16-10
G	Spacer	16-11
H	Holder L45	16-11
I	Holder L204	16-10
J	Cross piece	16-12
K	Corner piece	16-12
L	Vertical clamping holder D18 L160	16-11

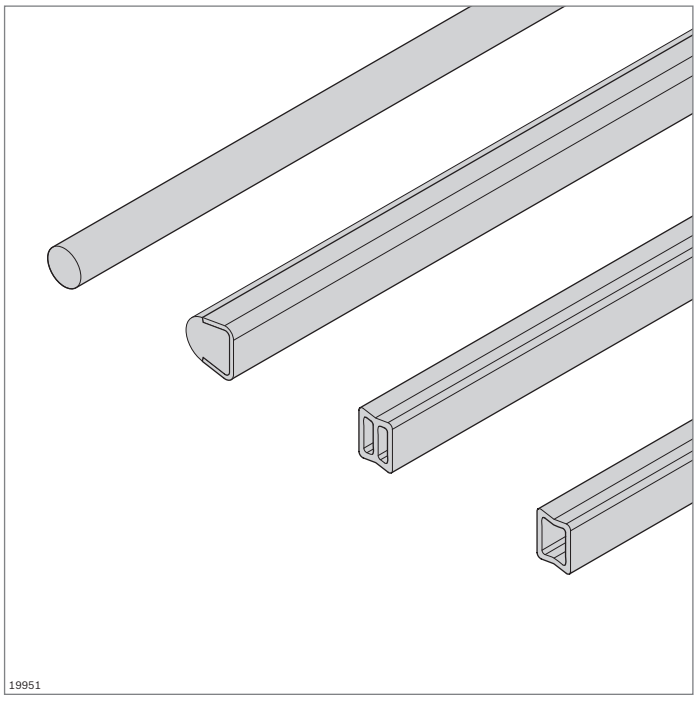

Profile rails and accessories for lateral guides

- Profile rails for lateral guiding of transported material
- Suitable for fixed lateral guide holders (p. 16-6), and variable lateral guide holders (p. 16-8)
- Various materials and geometries for different applications (p. 16-3, 16-4)
- Slide rails for secure guiding of transport material (p. 16-4)
- Profile connector for profile rail extension (p. 16-5)

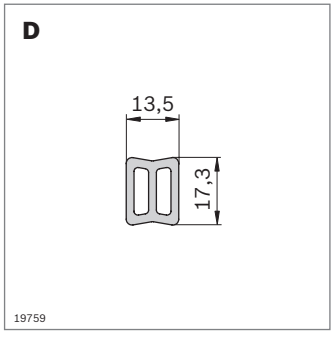

- Aluminum profile rail for robust lateral guides

Aluminum profile rail		L (mm)	No.
1 pc		200 ... 3000	**3 842 993 887 / L**
20 pcs		3000	**3 842 538 829**

Material: Aluminum; natural, anodized

Accessories: Narrow slide rail; high slide rail; outer profile connector; inner profile connector; cover cap; clamping holder C L100; holder; clamping head

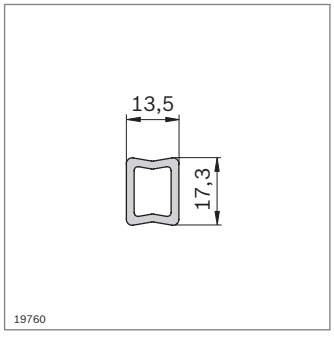

- HDPE profile rail for light applications
- Bendable

HDPE profile rail		L (mm)	No.
1 pc		3000	**3 842 538 388**

Material: HDPE; gray

Accessories: Narrow slide rail; high slide rail; outer profile connector; inner profile connector; cover cap; clamping holder C L100; holder; clamping head

A

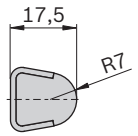

19763

- Profile rail 17x17.5 in robust stainless steel version with PE guide for gentle product handling

Profile rail 17x17.5		L (mm)	No.
1 pc		200 ... 3000	**3 842 994 863 / L**
20 pcs		3000	**3 842 529 850**

Material: Steel, stainless / PE; natural
Accessories: Outer profile connector; clamping holder C L100; holder; clamping head; clamping head

M

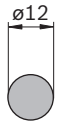

19764

- Profile rail D12 in robust stainless steel version

Profile rail D12		L (mm)	No.
1 pc		200 ... 3000	**3 842 993 306 / L**
6 pcs		3000	**3 842 533 841**

Material: Steel; stainless
Accessories: Clamping holder D12 L100

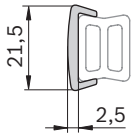

19761

- Clip-on slide rail for aluminum or HDPE profile rail
- For gentle product transport and minimum wear to HDPE profile rail

Slide rail, narrow		L (mm)	ESD	No.
1 pc		3000		**3 842 538 209**
1 pc		3000		**3 842 539 340**

Material: HDPE; gray
ESD: PE-UHMW, conductive, black

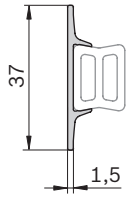

37140

- Clip-on slide rail for aluminum or HDPE profile rail
- Wide guiding surface
- For gentle product transport and minimum wear to HDPE profile rail

Slide rail, high		L (mm)	No.
1 pc		3000	**3 842 538 389**

Material: HDPE; gray

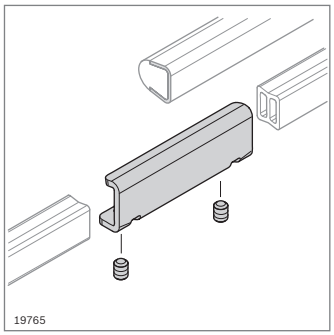

▶ Outer profile connector for aluminum profile rails, HDPE profile rail, 17x17.5 profile rail

Outer profile connector			No.
		10	**3 842 539 613**
Material:	Steel; stainless		
Scope of delivery:	Incl. 2 x headless setscrew		

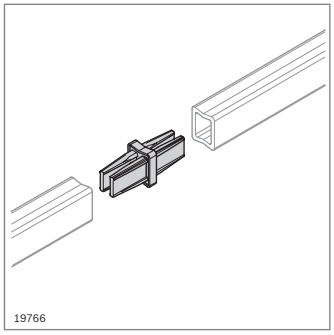

▶ Inner profile connector for profile rail in aluminum, HDPE

Internal profile connector		ESD		No.
			10	**3 842 539 345**
Material:	PA; black, conductive			

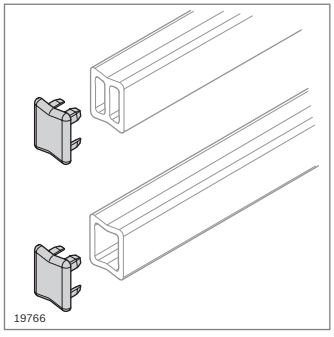

▶ Cover cap for profile rail in aluminum, HDPE

Cover cap		ESD		No.
			10	**3 842 538 208**
Material:	PA; black, conductive			

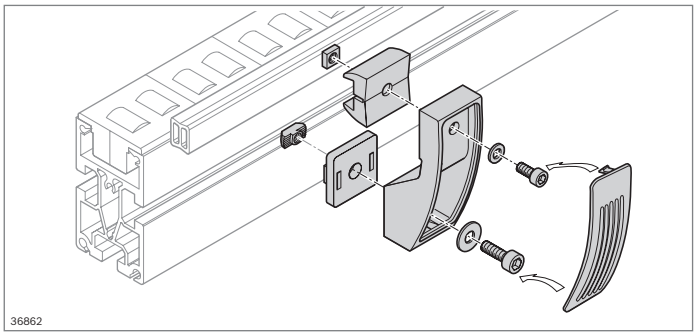

Holder for lateral guide, fixed

10

- Holders for lateral guides with fixed installation height and fixed guide width
- Easy to clean
- Robust

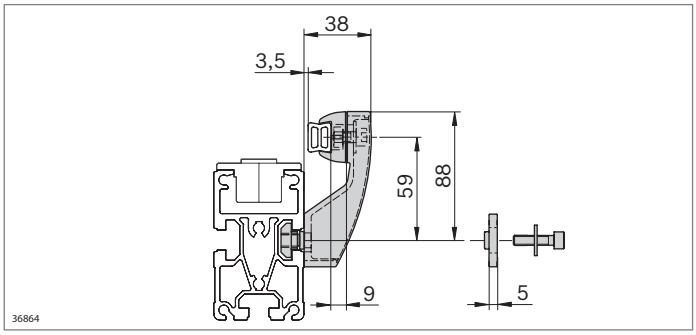

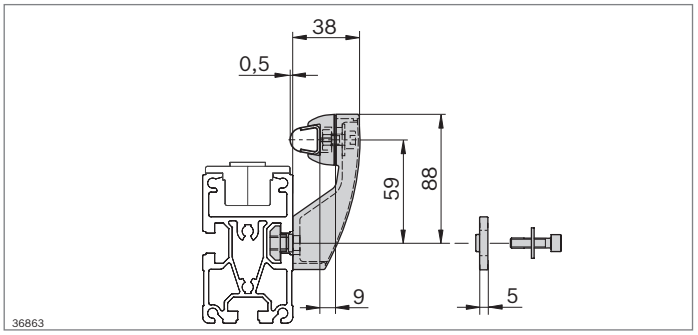

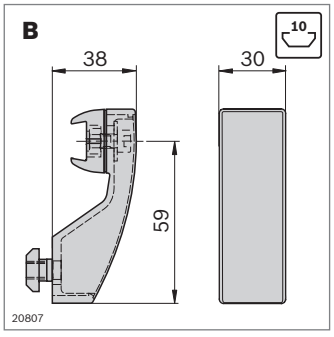

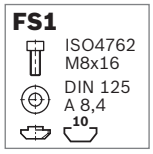

- Holder, fixed, for profile rail in aluminum, HDPE and 17x17.5
- For fixed guide width
- Spacer plate for guide width enlargement

Holder, fixed		No.	FS
Set		**3 842 527 851**	FS1
Material:	PA; black Fastening material: Steel; galvanized		
Scope of delivery:	Incl. clamping head, fastening material (FS)		

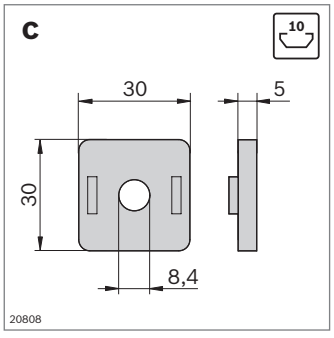

- Spacer plate for holders, fixed, to enlarge the guide width

Spacer plate		No.
	10	**3 842 527 738**
Material:	PA; black	

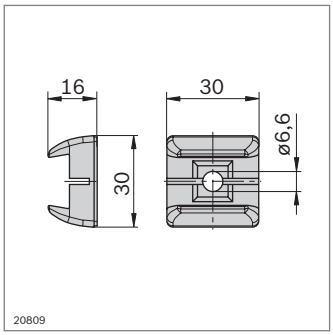

FS2

DIN 557
M6

▶ Clamping head for on-site construction of supports for protruding transported material

Clamping head		No.	FS
Set	10	**3 842 536 295**	FS2
Material:	PA; black Fastening material: Steel; galvanized		
Scope of delivery:	Incl. fastening material (FS)		

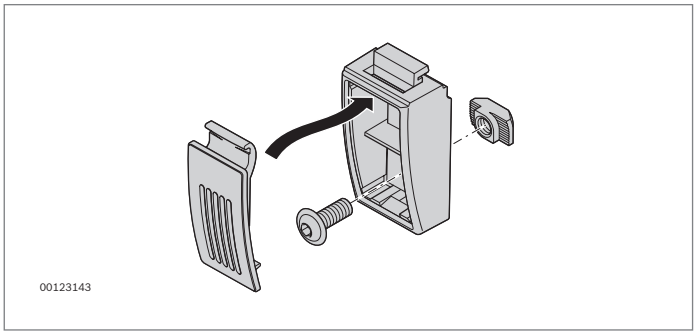

▶ Holder for simple installation in straight sections.

Holder for lateral guide		No.	FS
	10	**3 842 531 552**	FS3
Material:	PA; black		
Scope of delivery:	Incl. fastening material (FS)		

FS3

MLF-
M6x16
M6 10

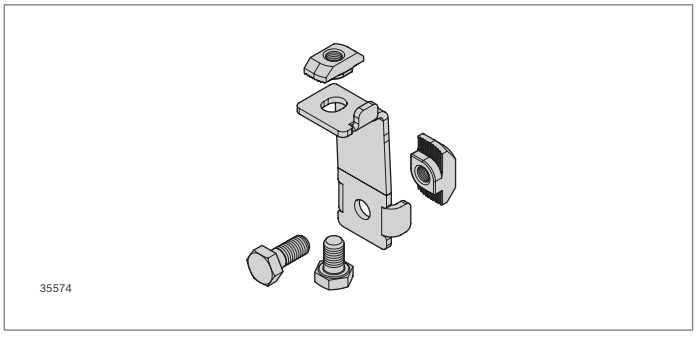

▶ Holder HD in sturdy design for straight sections and in the curve area

Lateral guide holder HD		No.	FS
	10	**3 842 557 005**	FS4, FS5
Material:	Stainless steel Fastening parts: Steel; galvanized		
Scope of delivery:	Incl. fastening material (FS)		

FS4

ISO 4017
M6x14
M6 10

FS5

ISO 4017
M6x10
M6 8

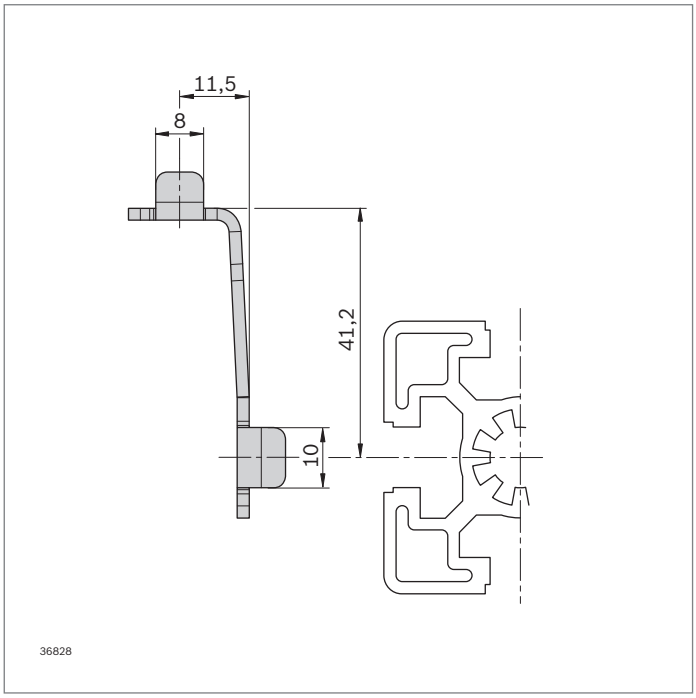

16

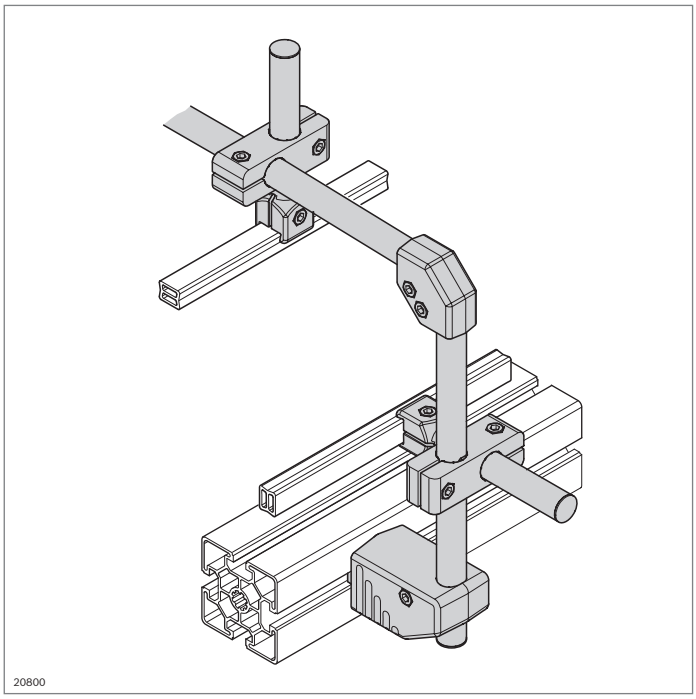

Holder for lateral guide, variable

10

- Holder and clamping holder allow for the variable adjustment of the guide height and width
- Easy to clean

Notice: For stability in the rotational direction, at least 2 holders must be connected with a continuous profile rail.

System dimensions

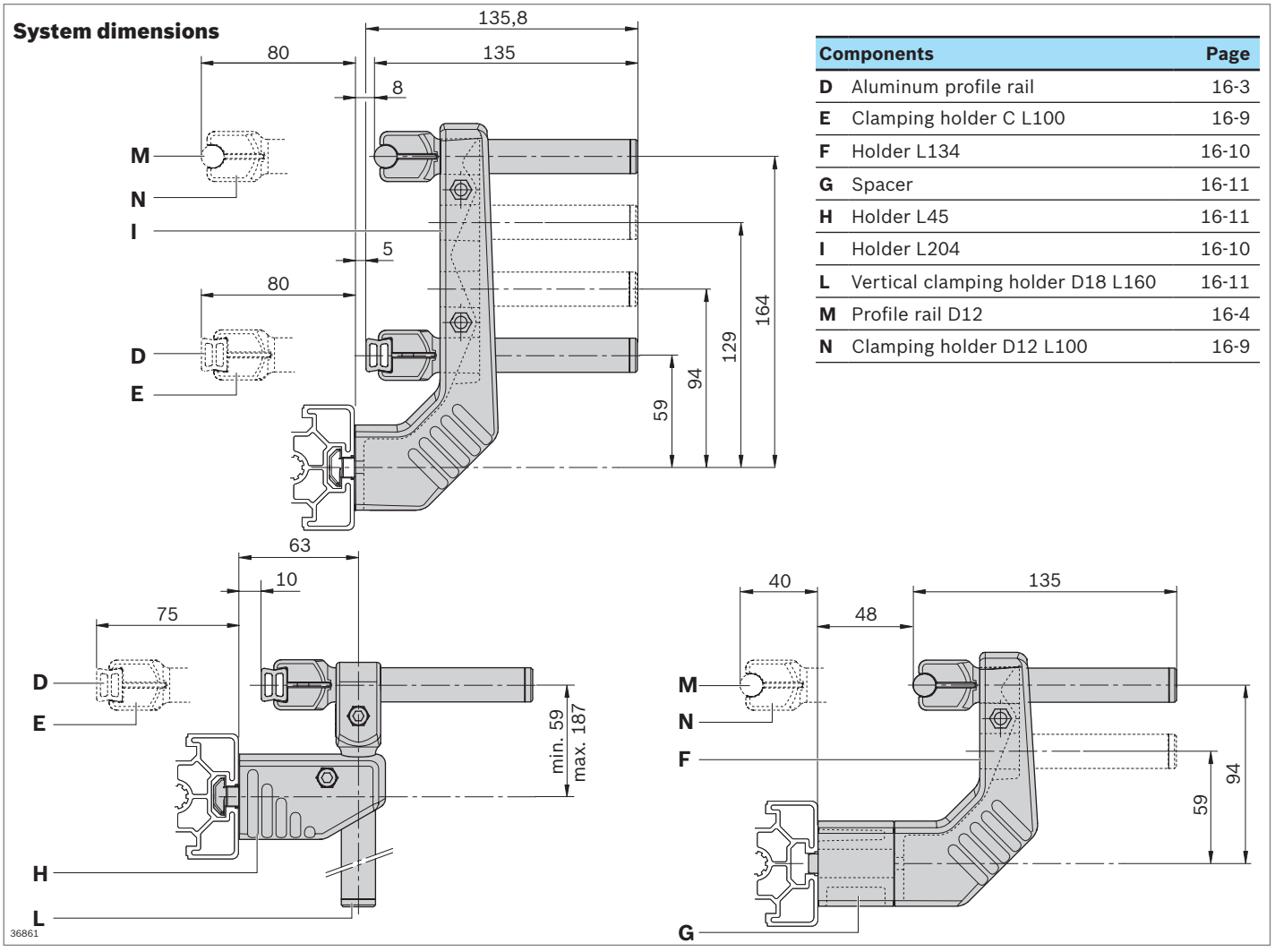

Components		Page
D	Aluminum profile rail	16-3
E	Clamping holder C L100	16-9
F	Holder L134	16-10
G	Spacer	16-11
H	Holder L45	16-11
I	Holder L204	16-10
L	Vertical clamping holder D18 L160	16-11
M	Profile rail D12	16-4
N	Clamping holder D12 L100	16-9

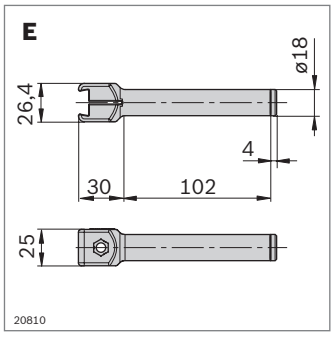

- Clamping holder C L100 for accommodating aluminum, HDPE, or 17x17.5 profile rails
- Scaling in mm and inch for simple alignment

Clamping holder C L100		No.
	10	**3 842 539 499**
Material:	Clamping holder: PA; black Nut, screw: Steel; stainless	
Accessories:	Plug	

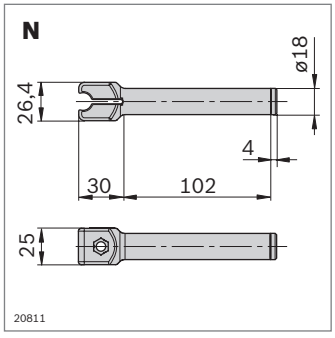

- Clamping holder D12 for accommodating D12 profile rails
- Scaling in mm and inch for simple alignment

Clamping holder D12 L100		No.
	10	**3 842 539 498**
Material:	Clamping holder: PA; black Nut, screw: Steel; stainless	
Accessories:	Plug	

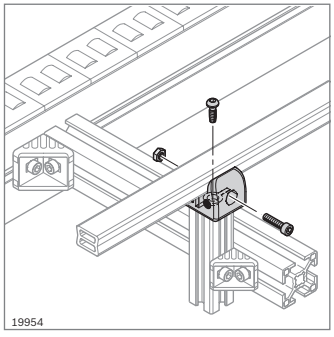

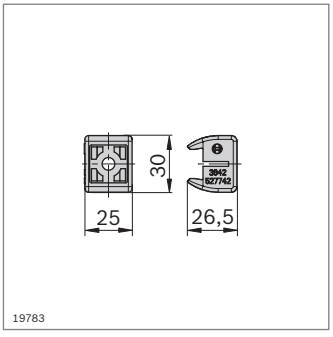

- Clamping head for accommodating aluminum, HDPE, or stainless steel profile rails with PE guide
- Direct mounting on profiles with 10 mm slot

Clamping head		No.	FS
Set	10	**3 842 528 009**	FS1
Material:	Clamping holder: PA; black Fastening material: Steel; galvanized		
Scope of delivery:	Incl. fastening material (FS)		

FS1



S6x16-
T25 ESD

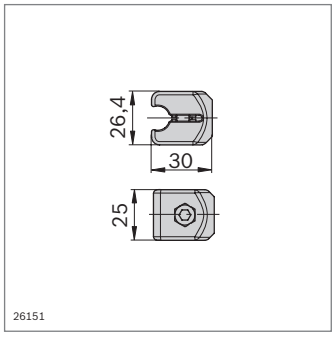

- Clamping holder D12 for accommodating D12 profile rails
- In conjunction with tube 18 for constructing longer clamping holders

Clamping holder D12		No.
	10	**3 842 547 227**
Material:	Clamping holder: PA; black Nut, screw: Steel; stainless	
Accessories:	Plug, tube D18	

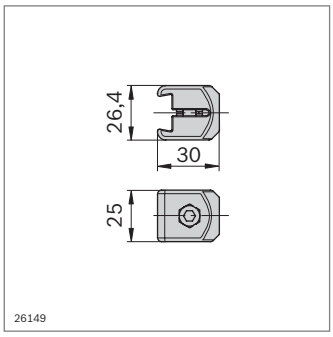

- Clamping holder C for accommodating aluminum, HDPE, or 17x17.5 profile rails
- In conjunction with tube D18 for constructing longer clamping holders

Clamping holder C		No.
	10	**3 842 547 228**
Material:	Clamping holder: PA; black Nut, screw: Steel; stainless	
Accessories:	Plug, tube D18	

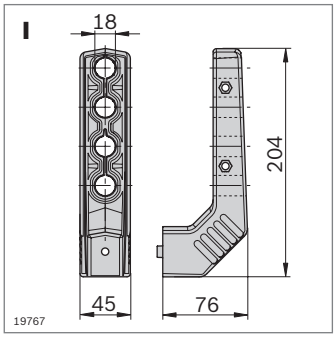

FS2

DIN 912
M6x16
DIN 9021
A 6,4

- Holder for fastening clamping holders C L100 or D12 L100
- Various installation heights possible for clamping holders
- Variable guide widths possible
- Additionally enlarge the guide width with the spacer
- Optional accessories: Clamping lever M6x40 (p. 4-13)

Holder L204		No.	FS
Set		**3 842 539 494**	FS2
Material:	PA; black Fastening material: Steel; stainless		
Scope of delivery:	Incl. fastening material (FS)		
Accessories:	T-nut M6, 10 mm slot (p. 3-4) Spacer		

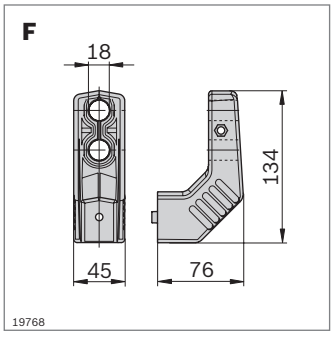

FS2

DIN 912
M6x16
DIN 9021
A 6,4

- Holder for fastening clamping holders C L100 or D12 L100
- Various installation heights possible for clamping holders
- Variable guide widths possible
- Additionally enlarge the guide width with the spacer
- Optional accessories: Clamping lever M6x40 (p. 4-13)

Holder L134		No.	FS
Set		**3 842 539 495**	FS2
Material:	PA; black Fastening material: Steel; stainless		
Scope of delivery:	Incl. fastening material (FS)		
Accessories:	T-nut M6, 10 mm slot (p. 3-4) Spacer		

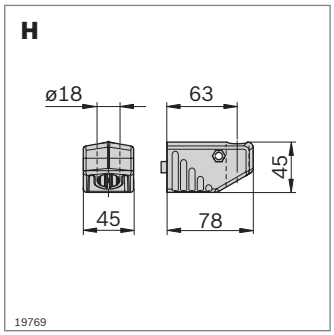

FS2

DIN 912
M6x16
DIN 9021
A 6,4

- Holder L45 for fastening vertical clamping holders or tube D18
- For infinitely height-adjustable lateral guides
- Enlarge the guide width with the spacer
- Optional accessories: Clamping lever M6x40 (p. 4-13)

Holder L45		**No.**	**FS**
Set	10	**3 842 539 496**	FS2
Material:	PA; black Fastening material: Steel; stainless		
Scope of delivery:	Incl. fastening material (FS)		
Accessories:	T-nut M6, 10 mm slot (p. 3-4) Spacer		

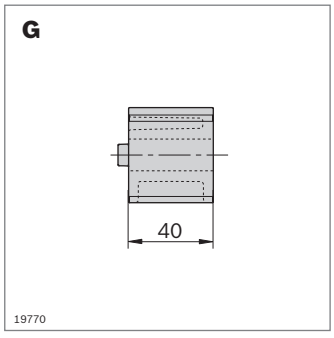

FS3

DIN912
M6x55
DIN 9021
-A6,4

Spacer		**No.**	**FS**
Set	10	**3 842 539 497**	FS3
Material:	PA; black Fastening material: Steel; stainless		
Scope of delivery:	Incl. fastening material (FS)		

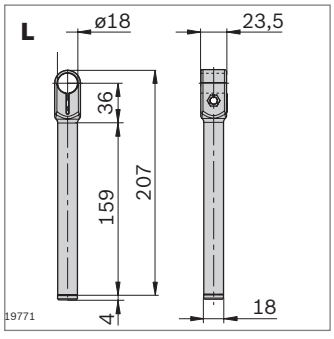

- Vertical clamping holder for constructing height-adjustable guides
- Optional accessories: Clamping lever M6x40 (p. 4-13)

Vertical clamping holder D18 L160		**No.**
	10	**3 842 539 500**
Material:	PA; black Nut, screw: Steel; stainless	
Accessories:	Plug	

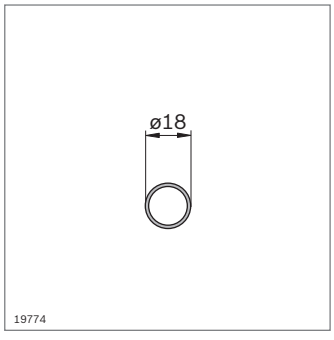

- Tube D18 for constructing height-adjustable vertical holders or cross members for upper guides

Tube D18	**L** (mm)	**No.**
	3000	**3 842 539 339**
Material:	Stainless steel	
Accessories:	Plug	

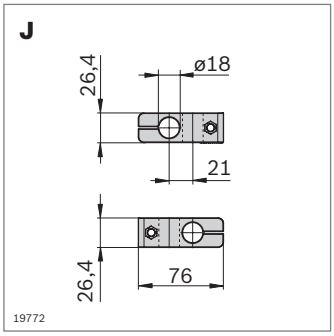

- Cross piece for the intersecting, right-angled joining of tubes D18 and clamping holders C L100 or D12 L100
- Optional accessories: Clamping lever M6x40 (p. 4-13)

Cross piece			No.
		10	**3 842 539 501**
Material:	Cross piece: PA; black Nut, screw: Steel; stainless		

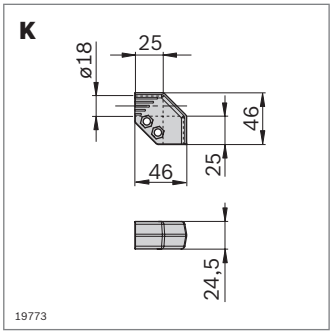

- Corner piece for the end face, right-angled joining of tubes D18 and clamping holders C L100 or D12 L100

Corner piece			No.
		10	**3 842 539 505**
Material:	Corner piece PA; black Nut, screw: Steel; stainless		

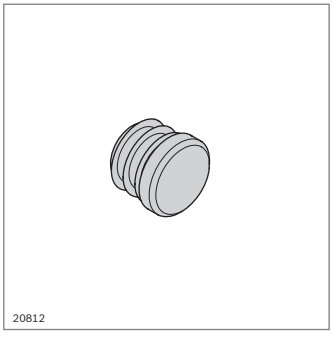

- Plug for sealing the clamping holder C L100, clamping holder D12 L100, vertical clamping holder D18 L160 or tube D18

Plug			No.
		10	**3 842 539 826**
Material:	PE; black		

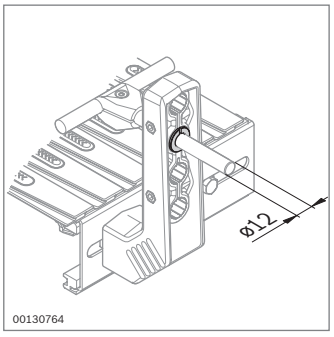

- Reducing adapter for mounting round profiles ø12 in attachments D18

Reducing adapter			No.
		20	**3 842 539 344**
Material:	PA; black		

Components for ESD applications



Set of grounding components (p. 17-2)



Grounding cable (p. 17-2)



Potentialfix (p. 17-3)



Wrist band, connection piece (p. 17-3)

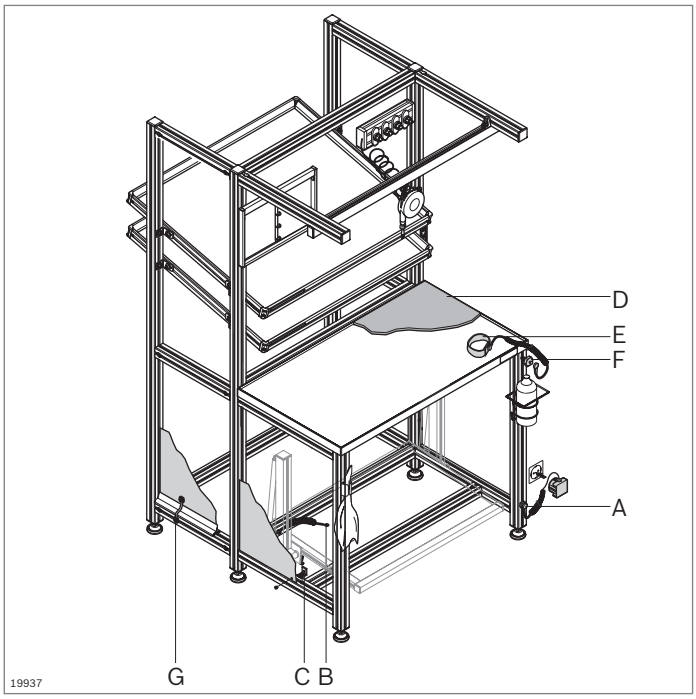

Components for ESD applications

ESD – Electro Static Discharge
Components which, due to their electrical properties and inner structure, are damaged or destroyed by static discharge also cause economic losses running into millions of euros each year.
You can use Rexroth components for ESD applications to protect your products from this type of damage.
Look for the ESD mark when selecting products (⚠).

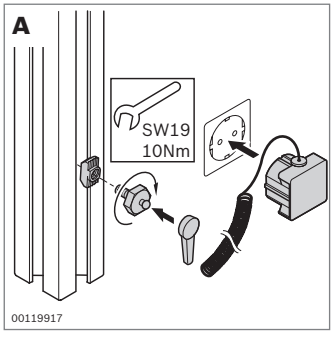

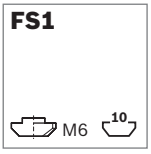

- Set of grounding components for defined grounding of ESD workstations
- Conduction resistance R = 1 x 10^6 Ω

Accessories:
Damping ring or damping plate for insulation from conductive floors makes defined conduction possible (p. 6-4, 6-6)

Set of grounding components	ESD	No.	FS
A	⚠	**3 842 522 087**	FS1
Material:	Fastening material: Steel; galvanized		
Scope of delivery:	Incl. fastening material (FS)		

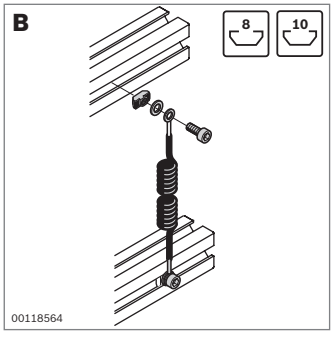

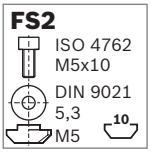

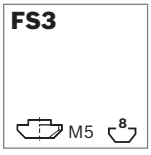

- Grounding cable to create defined conductive paths between strut profiles in order to protect ESD-sensitive components

Grounding cable	ESD	No.	FS
B	⚠	**3 842 519 465**	2xFS2, FS3
Material:	Fastening material: Steel; galvanized		
Scope of delivery:	Incl. fastening material (FS)		

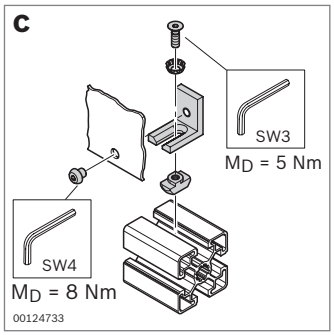

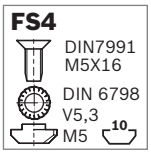



- Potentialfix for defined grounding of panel elements such as side panels

Potentialfix	ESD	No.	FS
C	⏚	**3 842 536 320**	FS4, FS5

Material:	Bracket: Aluminum Fastening material: Steel; galvanized
Scope of delivery:	Incl. fastening material (FS)

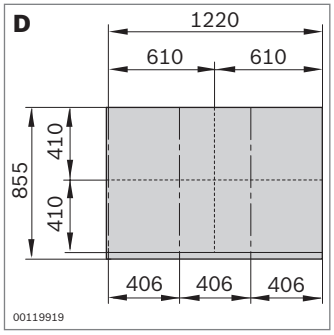

- ESD mat insert for protecting ESD-sensitive components
- To create a safe, conductive connection, e.g. to ESD material shelves, we recommend using adhesive copper tape
- Conduction resistance R = 10^4 ... 10^9 Ω

ESD mat insert	ESD	No.
D 1220 mm x 855 mm	⏚	**3 842 522 012**

Material:	Rubber (thickness: 2 mm)

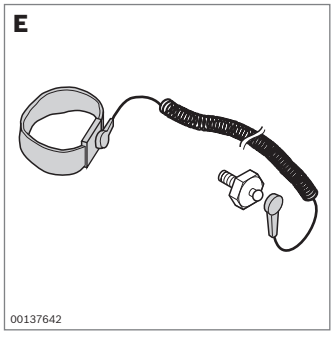

- Wrist band for defined grounding of people and protection of ESD-sensitive components

Required accessories:
- Connection piece
- T-nut M6, or swivel-in sliding block, with spring, M6

Wrist band	ESD	No.
E	⏚	**3 842 516 908**

Material:	Textile with woven-in conductive plastic; navy blue

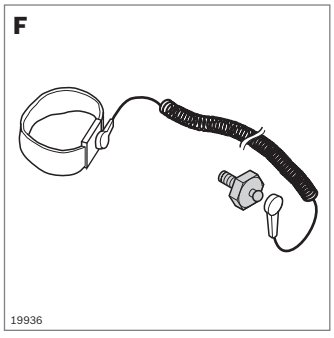

- Connection piece for connecting the wrist band to the profile construction

Connection piece	ESD		No.
F	⏚	10	**3 842 516 905**

Material:	Steel; galvanized

17

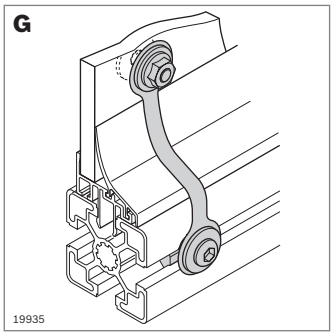

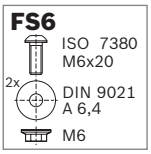

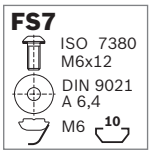

- Potential equalizer for creating electrostatic conduction between panel elements and strut profiles

Potential equalizer	ESD		No.	FS
G		10	**3 842 536 148**	FS6, FS7

Material:	Strip steel, stainless Fastening material: Steel; galvanized
Scope of delivery:	Incl. fastening material (FS)

Technical data



Standard profile finishing (Quick & Easy) (p. 18-2)

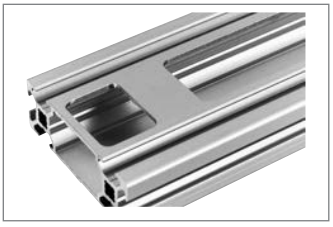

Individual profile finishing (Quick & Easy) (p. 18-7)

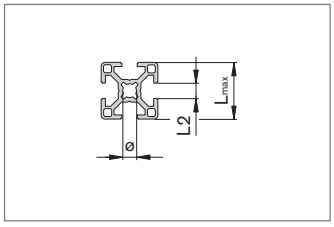

Technical data for strut profiles (p. 18-12)

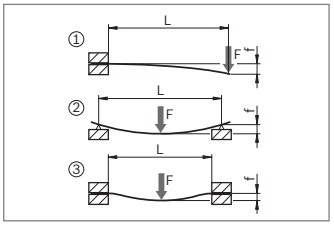

Profile deflection (p. 18-14)

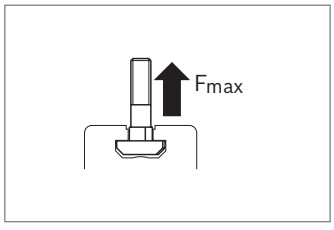

Profile slot load-bearing capacity (p. 18-15)

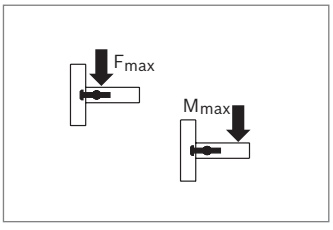

Load-bearing capacity of profile connection (p. 18-16)

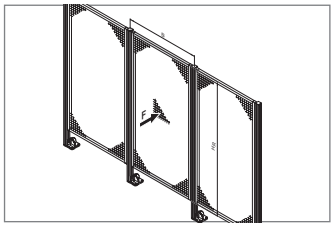

Load-bearing capacity data for EcoSafe protective frame and EcoSafe support (p. 18-21)

Standard profile finishing (Quick & Easy)

Standard profile finishing is used for Rexroth connection technology and attachment of accessories:

- Central bolt (corner connection)
- Quick connector
- Bolt connector
- Cross connector
- Feet and wheels

It offers decisive advantages:

- One general material number for all finishing processes at profile cross-sections
- Available for all profiles
- Any combinations possible
- Drilling of blind holes possible

This opens up completely new possibilities!

The order key has a simple structure:
There are fixed specifications for the parameters for exact finishing of each profile. See table.

For information on slot designations and available standard profile finishing, please refer to chapter 2.

Order key for through-holes, blind holes, standard milling:
Material number / length / slot designation = finishing at profile start / finishing at profile end; ...

Order key for threads:
Material number / length / Z = Mx at profile start / Mx at profile end

Standard profile finishing		6	8	10
Through-hole for corner connections with central bolt		**D5.8** 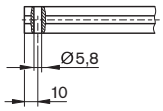	**D7.8** 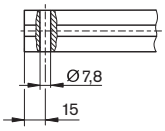	**D9.8** 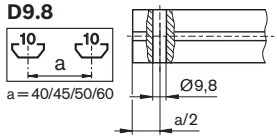
Through-hole for bolt connectors and quick connectors		**D8** 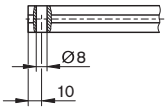	**D11** 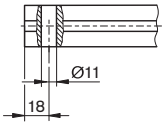	**D17** 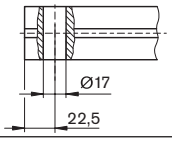
Blind hole For longitudinal end connectors and quick connectors in closed profiles		**DB8** 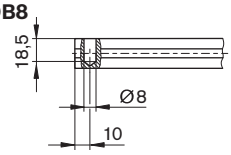	**DB11** 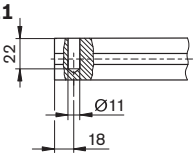	**DB17** 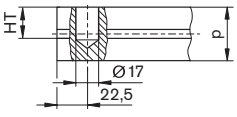 **p** 40 45 50 60 **HT** 31 34 36 41
Threads in all core holes for accessories		**M6** 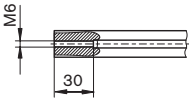	**M8** 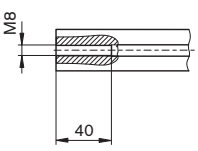	**M12** 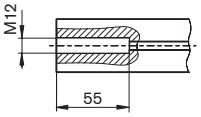 **M16** 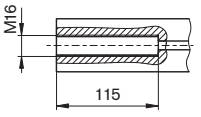
Standard milling for cross connectors				**F1** 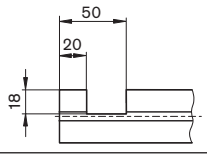



Through-hole Dx

Use:

- **D5.8; D7.8; D9.8** for corner connections with central bolt
- **D8; D11; D17** for bolt connectors and quick connectors

Fixed specifications:
Distance from profile end (PS)

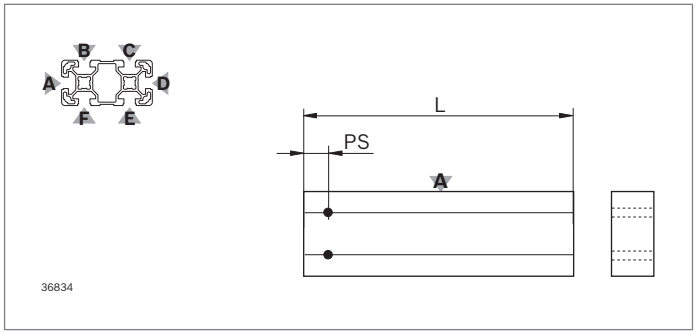

Example:
3 842 993 728 / 255 / B=D17/–; C=D17/–
Profile 40x80L / L = 255 mm /
Slot B: Through-hole D17 at profile start / without finishing at profile end;
Slot C: Through-hole D17 at profile start / without finishing at profile end
Fixed: PS = 22.5 mm (p. 18-2)

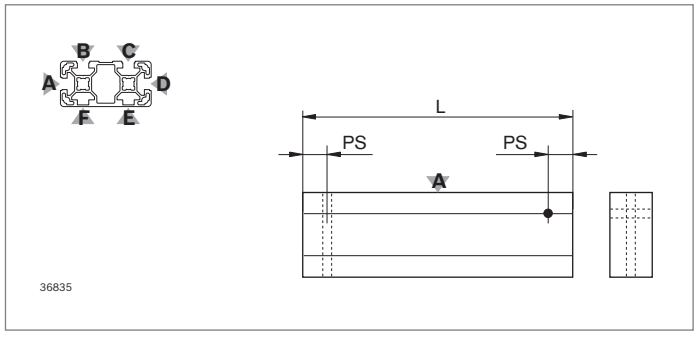

Example:
3 842 993 729 / 255 / B=–/D17; D=D17/–
Profile 40x80L 4N / L = 255 mm /
Slot B: Without finishing at profile start / Through-hole D17 at profile end;
Slot D: Through-hole D17 at profile start / without finishing at profile end
Fixed: PS = 22.5 mm (p. 18-2)

Other examples

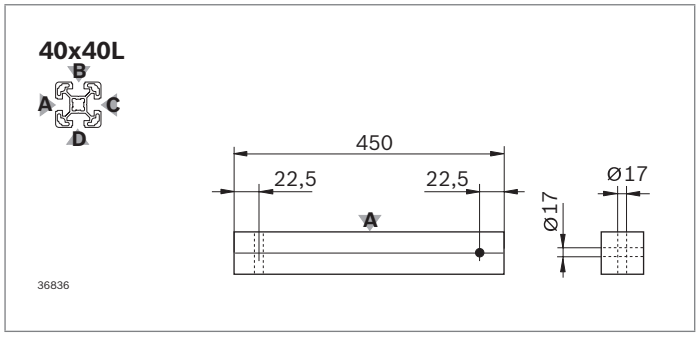

Example:
3 842 993 724 / 450 / A=D17/–; B=–/D17

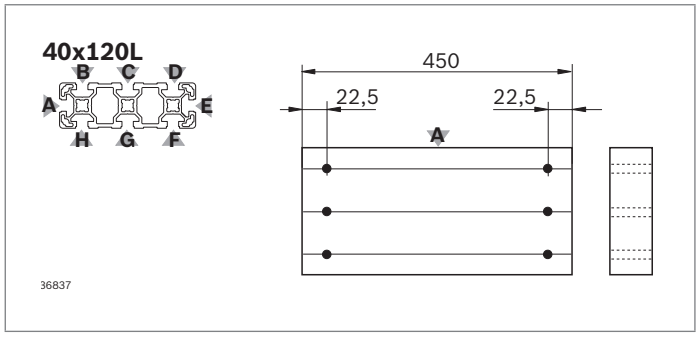

Example:
3 842 993 716 / 450 / B=D17/D17; C=D17/D17; D=D17/D17

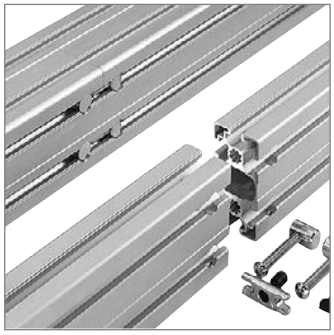

Blind hole DBx

Use:
DB8; DB11; DB17 for quick connectors in closed profiles and longitudinal end connectors

Advantages:
In case of closed slots, the profile surface is not broken.

Fixed specifications:
- Distance from profile end (PS)
- Depth of blind hole (HT)

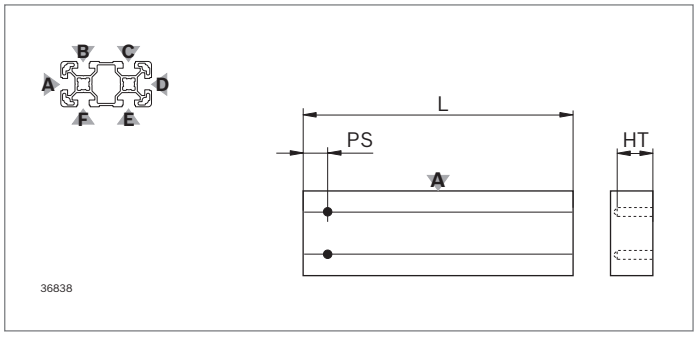

Example:
3 842 993 728 / 255 / B=DB17/–; C=DB17/–
Profile 40x80L / L = 255 mm /
Slot B: Blind hole DB17 at profile start / without finishing at profile end;
Slot C: Blind hole DB17 at profile start / without finishing at profile end
Fixed: PS = 22.5 mm, HT = 34 mm (p. 18-2)

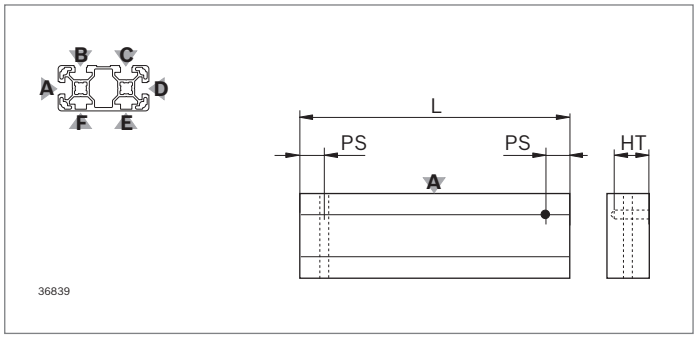

Example:
3 842 993 729 / 255 / B=–/DB17; D=D17/–
Profile 40x80L 4N / L = 255 mm /
Slot B: Without finishing at profile start / Blind hole DB17 at profile end;
Slot D: Through-hole D17 at profile start / without finishing at profile end
Fixed: PS = 22.5 mm, HT = 34 mm (p. 18-2)



Thread Mx

Use:
M6; M8; M12; M16 in all core holes of the profile, e.g. for screw fitting of feet and wheels

Fixed specifications:
Thread depth

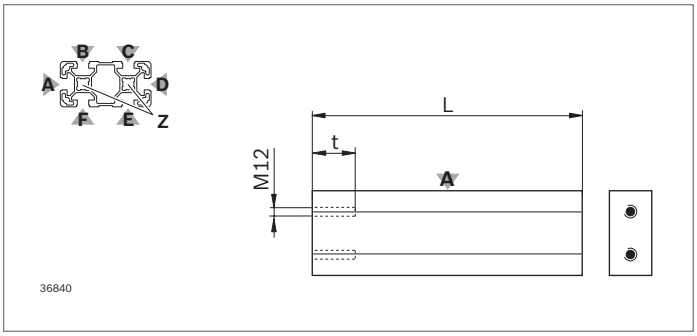

Example:
3 842 993 728 / 255 / Z=M12/–
Profile 40x80L / L = 255 mm /
Thread M12 in all core holes at profile start /
no finishing at profile end
Fixed: Thread depth HT = 55 mm (p. 18-2)

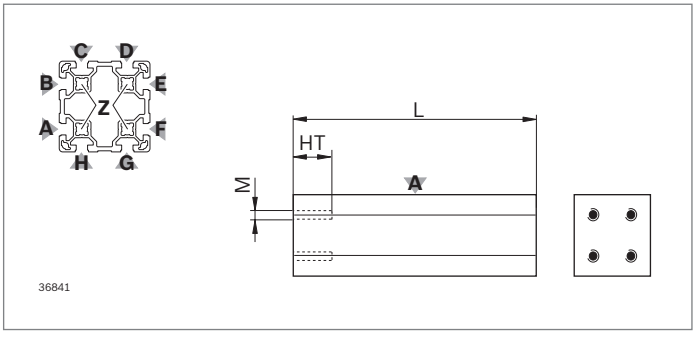

Example:
3 842 993 674 / 255 / Z=M12/–

Profile 80x80L / L = 255 mm /
Thread M12 in all core holes at profile start /
no finishing at profile end
Fixed: Thread depth HT = 55 mm (p. 18-2)

Other examples

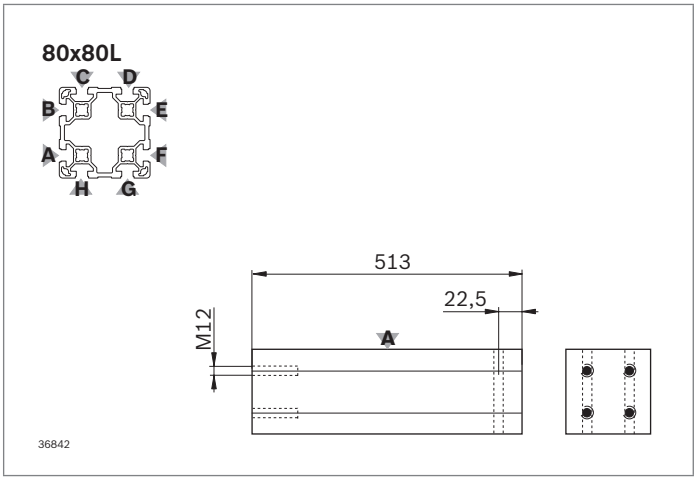

Example:
3 842 993 674 / 513 / Z=M12/–; A=–/D17; B=–/D17

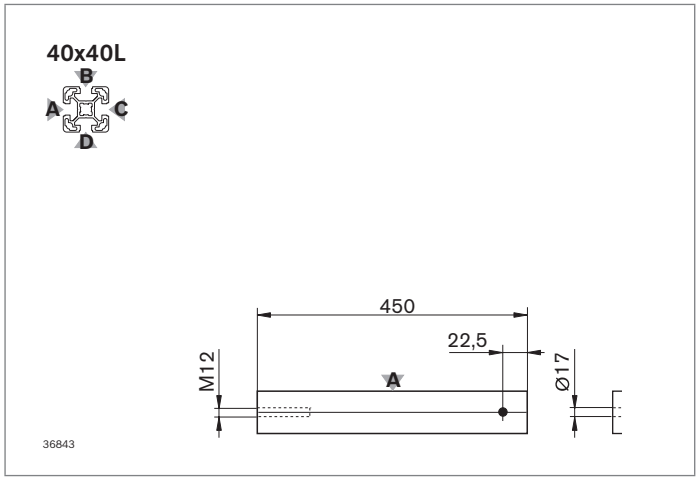

Example:
3 842 993 724 / 450 / Z=M12/–; B=–/D17

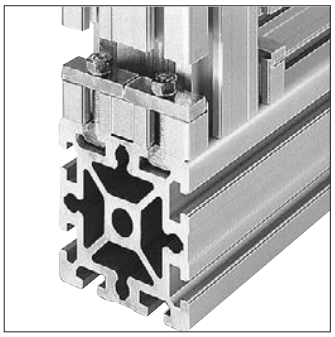

Standard milling F1

Use:
F1 for cross connectors

Fixed specifications:
- Start point of milling (PS)
- End point of milling (PE)
- Depth of milling (HT)

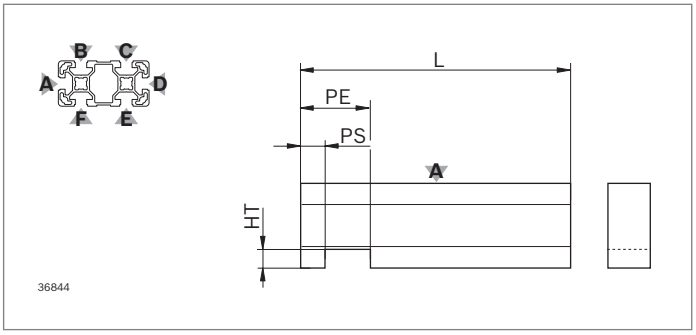

Example:
3 842 993 728 / 383 / D=F1/–
Profile 40x80L / L = 383 mm /
Slot D: Cross milling at profile start /
without finishing at profile end
Fixed: PS = 20 mm; PE = 50 mm; HT = 18 mm (p. 18-2)

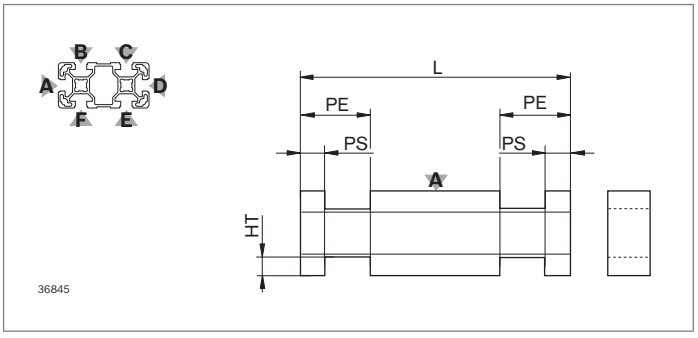

Example:
3 842 993 729 / 383 / A=F1/F1; D=F1/F1
Profile 40x80L 4N / L = 383 mm /
Slot A: Cross milling at profile start / cross milling at profile end
Slot D: Cross milling at profile start / cross milling at profile end
Fixed: PS = 20 mm; PE = 50 mm; HT = 18 mm (p. 18-2)

Other examples

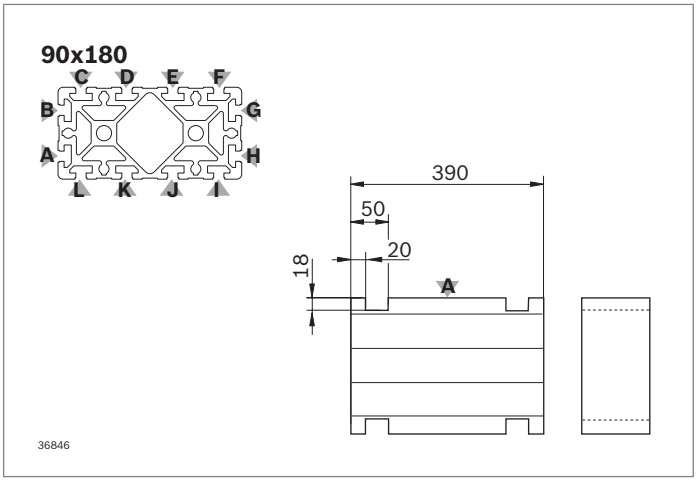

Example:
3 842 993 676 / 390 / A=F1/F1; G=F1/F1

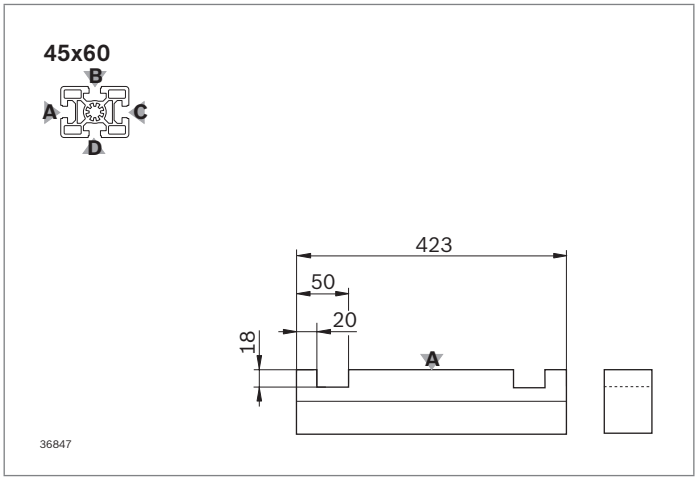

Example:
3 842 993 743 / 423 / A=F1/F1

Individual profile finishing (Quick & Easy)

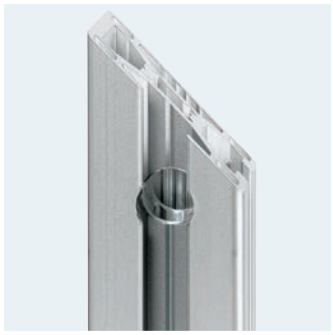

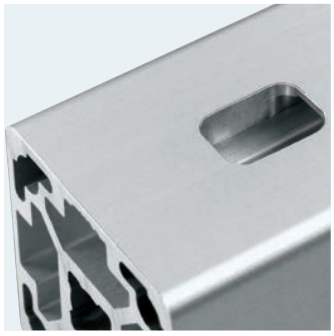


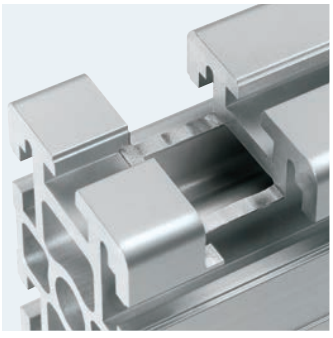



With individual profile finishing, Quick & Easy offers the following advantages:

- Precise finishing at virtually every point along the profile
- Maximum variance of available finishing procedures
- Available for numerous profiles
- Finishing possible in almost any combination including sequential finishing
- Variable finishing options from one source

The following finishing options are available:

- Through-hole
- Blind holes
- Stepped drilling
- Cross milling (transversely to the longitudinal axis)
- Lengthwise milling (in longitudinal axis)
- Miter cuts

Notice:
Depending on the selected finishing options, minimum and maximum lengths must be observed when ordering.



Oder examples for profile 45x90, L = 383 mm

DI **Through-hole next to the slot**
3 842 993 661 / 383 / [B=DI; PS=60; OS=22.5; DM=9.8]

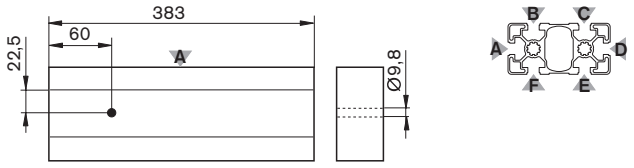

Blind hole
3 842 993 661 / 383 / [B=DI; PS=60; DM=9.8; HT=12.2]

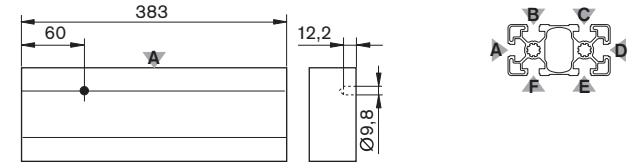

Stepped drilling
3 842 993 661 / 383 / [B=DI; PS=60; DM=11.0; HT=12.2];
[B=DI; PS=60; DM=9.8]

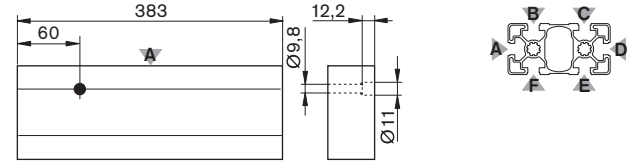

DIS **Sequence of through-holes**
3 842 993 661 / 383 / [B=DIS; PS=60; OS=22.5; DM=9.8; SN=4;
SD=35]

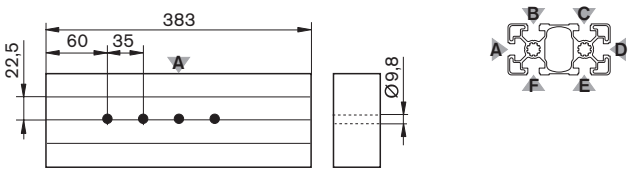

Drill hole

Drill hole DI

- Through-hole with diameter (**DM**) at any points of the profile (**PS, OS**). Please note the information on OS in the table.
- Blind hole by additional specification of drilling depth (**HT**)
- Stepped drilling by two drill holes at the same position of the profile
- Observe required minimum wall thickness (PS_{min}, PS_{max})!

Drilling sequence DIS

- Regular sequence of identical drilling (**SN**, **SD**)
- Observe required minimum wall thickness (SD_{min})!

End finishing	Abbreviation	Parameter	
Drill hole	**DI**	**PS**	Center point of hole
			PS_{min} = DM/2 + 3 mm; PS_{max} = L – (DM/2 + 3 mm)
		OS (optional)	Offset starting point
			Select OS so that the hole does not cut through any slot edges
		DM	Hole diameter
			DM, see table
		HT (optional)	Depth of drilling. Through-holes made if no information provided.
			HT_{max}, see table
Drilling sequence	**DIS**	**PS, OS, DM, HT**	As for drill hole DI
		SN	Number of finishes
			SN_{max} = INT((L – 3 – PS – DM/2)/ SD) + 1
		SD	Distance between adjacent finishes
			SD_{min} = DM + 3

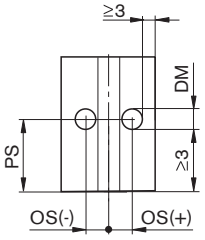

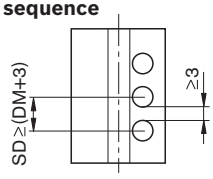

Admissible drilling diameters and depths (in mm)

DM	5.8	6.4	7.8	8.0	8.4	9.8	11.0	17.0
HT_{max}	40.0	45.0	45.0	45.0	45.0	50.0	60.0	75.0

ATTENTION: If HT_{max} is not sufficient to drill through the profile, you must order two opposite bores!

Order key:
Material number / length / [slot designation=DI; PS=...; *OS=...*; **DM=...;** *HT=...*]; *[...]*
Material number / length / [slot designation=DIS; PS=...; *OS=...*; **DM=...;** *HT=...*; **SN=...; SD=...];** *[...]*



Oder examples for profile 45x90, L = 383 mm

MT **Cross milling on profile side slot D**
3 842 993 661 / 383 / [D=MT; PS=50; HT=12.5; PE=90]

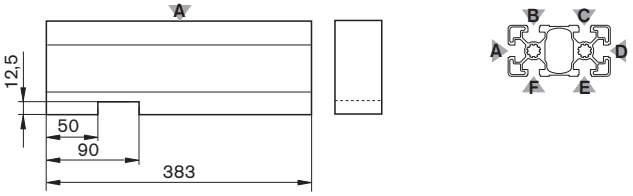

MTS **Cross milling sequence on profile side slot D**
3 842 993 661 / 383 / [D=MTS; PS=50; HT=12.5; PE=90; SN=4; SD=53]

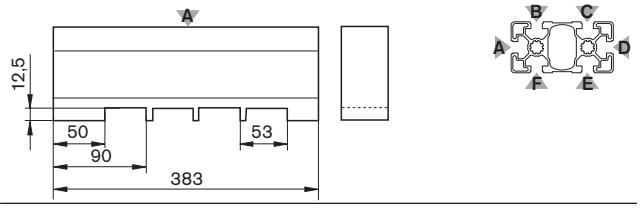

Cross milling

Cross milling MT

- Cross milling at any point of the profile (slot designation **PS**) with variable depth (**HT**) and length (**PE – PS**); the width corresponds to the profile width.
- Observe required minimum wall thickness (PS_{min}, PS_{max})!

Cross milling sequence MTS

- Regular sequence of identical cross milling (**SN**, **SD**)
- Observe required minimum wall thickness (SD_{min})!

End finishing	Abbreviation	Parameter	
Cross milling	**MT**	**PS**	Starting point of milling (Profile cut surface distance – Cross milling leading edge)
			PS_{min} = 8 mm PS_{min} = 60 mm on the underside of the profile
		HT	Depth of milling
			HT_{max} = 5.5 mm (slot 6 mm) HT_{max} = 9.0 mm (slot 8 mm) HT_{max} = 12.5 mm (slot 10 mm)
		PE	Starting point of milling (Profile cut surface distance – Cross milling trailing edge)
			PE_{max} = L – 8 mm 8 mm ≤ PE – PS ≤ 100 mm
Cross milling sequence	**MTS**	**PS, HT, PE**	As for cross milling MT
		SN	Number of finishes
			SN_{max} = INT((L – 8 – PE)/SD)+1
		SD	Distance between adjacent finishes
			SD_{min} = (PE – PS) + 10

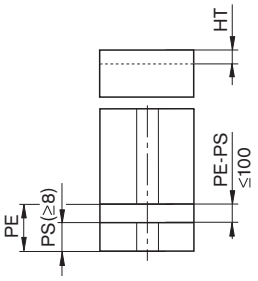

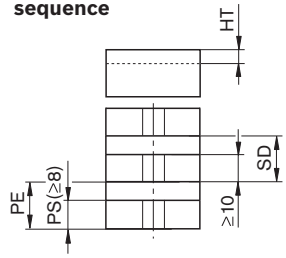

Order key:
Material number / length / [slot designation=MT; PS=...; HT=...; PE=...]; *[...]*
Material number / length / [slot designation=MTS; PS=...; HT=...; PE=...; SN=...; SD=...]; *[...]*



Oder examples for profile 45x90, L = 200 mm

MI **Lengthwise milling**
3 842 993 661 / 200 / [B=MI; PS=15; OS=22.5; DM=55; HT=10; PE=80; RG=5]

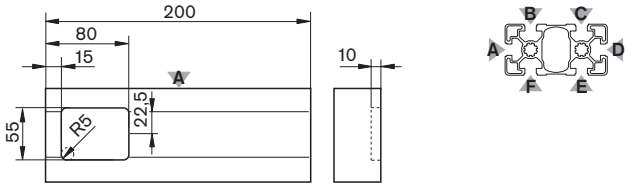

MIS **Sequence of lengthwise milling**
3 842 993 661 / 200 / [C=MIS; PS=15; DM=15; HT=10; PE=80; RG=4; SN=2; SD=85]

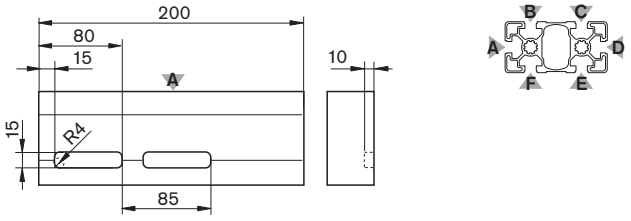

Lengthwise milling

Lengthwise milling MI

- Lengthwise milling at any point of the profile (slot designation **PS**, **OS**) with variable depth (**HT**), width (**DM**) and length (**PE – PS**). The milling corner radius is defined by the radius of the milling tool (**RG**).
- Observe required minimum distances (PS_{min}, PS_{max}, DM_{max})!

Lengthwise milling sequence MIS

- Regular sequence of identical lengthwise milling (**SN**, **SD**)
- Observe required minimum wall thickness! (SD_{min})

End finishing	Abbreviation	Parameter	
Lengthwise milling	**MI**	**PS**	Starting point of milling
			PS_{min} = 8 mm PS_{min} = 60 mm on the underside of the profile (see order tables for guidance)
		OS (optional)	Offset starting point
		DM	Milling width
			DM_{min} = 8 mm DM_{max} = profile width/ height – 6 mm At least 3 mm of profile must remain on both sides
		HT	Depth of milling.
			HT_{max} = 5.5 mm (slot 6 mm) HT_{max} = 9.0 mm (slot 8 mm) HT_{max} = 12.5 mm (slot 10 mm)
		PE	End point of milling
			PE_{max} = L – 8 mm 8 mm ≤ PE – PS ≤ 100 mm
		RG	Radius of milling geometry
			RG = 3 mm; 4 mm; 5 mm; 8 mm
Lengthwise milling sequence	**MIS**	**PS, OS, DM, HT, PE, RG**	As for lengthwise milling MI
		SN	Number of finishes
			SN_{max} = INT(L – 8 – PE/SD) + 1
		SD	Distance between adjacent finishes
			SD_{min} = (PE – PS) + 10

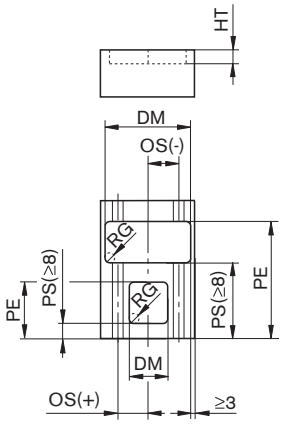

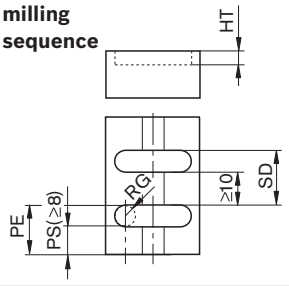

Order key:
Material number / length / [slot designation=MI; PS=...; *OS=...*; **DM=...; HT=...; PE=...; RG=R..];** *[...]*
Material number / length / [slot designation=MIS; PS=...; *OS=...*; **DM=...; HT=...; PE=...; RG=R..; SN=...; SD=...];** *[...]*

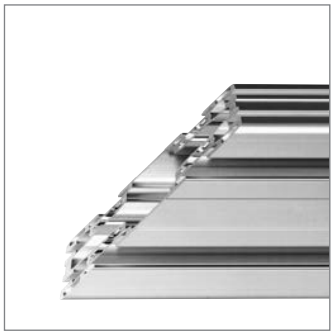

Miter cut

Miter cut

- Cutting of profiles at any angle
- Profile sides are numbered in clockwise direction.
  S1 is the left profile side according to the illustrated position on the ordered side; the following sides are designated with S2, S3 and S4.
- Miter cut is started at the indicated side. Possible sides: S1 and S3.
- Observe the maximum admissible miter bracket and minimum length

End finishing	Abbreviation	Parameter	
Miter cut	–	**FS**	Front side: Designation of the profile end the miter cut is to be performed at S1, S3: Profile side on which the miter cut begins
			FS = S1; FS = S3
		BS	Back side: Opposite profile end S1, S3: Profile side on which the miter cut begins
			BS = S1; BS = S3
		DG	Miter bracket
			DG > 0 The angle is always specified as a positive value; orientation results from FS/BS and the side on which the miter cut begins. Note the maximum permissible miter angle.

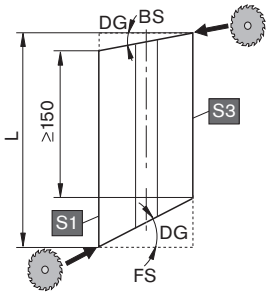

Oder examples for profile 45x90, L = 383 mm

MT **Miter cut on both sides through side S3 (side with slot D)**
3 842 993 661 / 383 / [FS=S3; DG=45]; [BS=S3; DG=45]

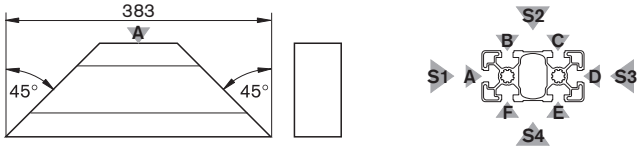

Miter cut on both sides through side S1 (side with slot A)
3 842 993 661 / 383 / [FS=S1; DG=45]; [BS=S1; DG=45]

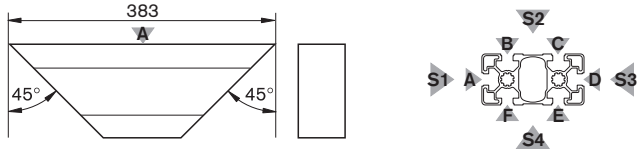

Miter cut on through side S1 (FS) and S3 (BS)
3 842 993 661 / 383 / [FS=S1; DG=45]; [BS=S3; DG=45]

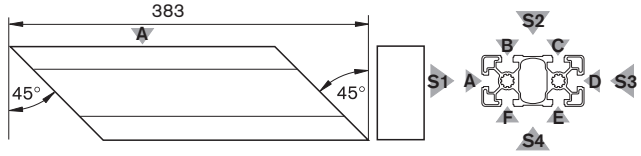

Order key:
Material number / length / [FS=side; DG=miter angle]; *[BS=side; DG=miter angle]*

Technical data for strut profiles

EN AW – Al MgSi		Material designation according to DIN EN 573 for Rexroth strut profiles
EN AW – 6060		Material number according to DIN EN 573
R_m	= 245 N/mm²	Minimum tensile strength (in direction of pressure)
$R_{p0.2}$	= 195 N/mm²	0.2 % proof stress (in direction of pressure)
A_5 A_{10}	= 10 % = 8 %	Ductile yield A_5 or A_{10}
E	= 70000 N/mm²	Modulus of elasticity E
75 HB		Brinell hardness
$\alpha_{(-50...+20\ °C)}$ $\alpha_{(+20...100\ °C)}$	= 21.8 x 10^{-6} 1/K = 23.4 x 10^{-6} 1/K	Longitudinal expansion coefficient

μ	= 0.34	Poisson's ratio

E6/EV1 – 12 μm – 300 HV	Anodizing process – layer thickness – layer hardness

Permitted dimensional tolerance t (mm) for profiles from different deliveries

L_{max}	11–20	22,5–30	40	45–60
t	±0.15	±0.2	+0.6	±0.3

L_{max}	80	90	120	160
t	+0.8	±0.4	+1.0	+1.6

L_{max}	180	270	360
t	±0.6	±1.0	±1.5

L2	6	8	10
t	+0.3	+0.3	+0.4

Ø	5.5	7.3	10	15
t	–0.1 +0.2	–0.1 +0.2	±0.15	±0.15

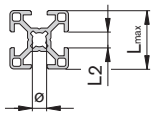

00109370

Deviation limits and form tolerances according to DIN EN 12020-2
Rexroth profiles generally fall well within the generally applicable tolerances specified in the standard. They are specifically defined for the individual products.

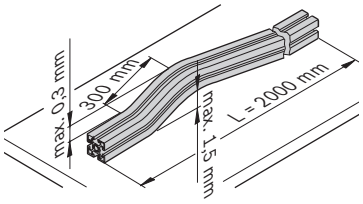

Longitudinal straightness tolerance of profile

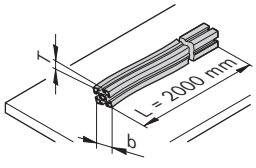

00126465

Longitudinal torsional tolerance of profile

b (mm)	**T** (mm)
≤ 100	1.2
100 ... 150	1.5
150 ... 200	1.8
200 ... 350	2.5

Profile deflection

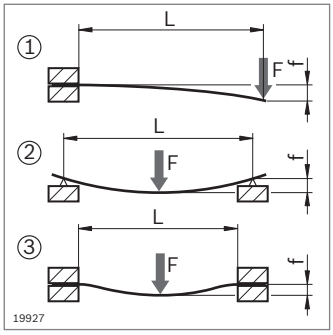

$f_{①} = \frac{F \times L^3}{3\ E \times I \times 10^4}$ $f_{②} = \frac{F \times L^3}{48\ E \times I \times 10^4}$ $f_{③} = \frac{F \times L^3}{192\ E \times I \times 10^4}$	Profile deflection due to force F for static load cases ①②③
$f_{①} = \frac{m' \times g \times L^4}{8\ E \times I \times 10^4}$ $f_{②} = \frac{5 \times m' \times g \times L^4}{384\ E \times I \times 10^4}$ $f_{③} = \frac{m' \times g \times L^4}{384\ E \times I \times 10^4}$	Profile deflection due to the profile's own weight
$\sigma_{①} = \frac{(m' \times g \times L + F) \times L}{W \times 10^3}$ $\sigma_{②} = \frac{(m' \times g \times L + F) \times L}{4\ W \times 10^3}$ $\sigma_{③} = \frac{(m' \times g \times L + F) \times L}{8\ W \times 10^3}$	Control of max. occurring bending stress $\sigma_{b\ max}$
$\sigma_{b\ max} < \sigma_{b\ zul.}$! $\sigma_{b\ zul.} = \frac{R_{p0,2}}{S_{F\ erf.}}$	$S_{F\ req}$: Safety value required to avoid deformation (flow) $\sigma_{b\ zul}$: Max. permissible bending stress

f (mm)	W (cm^3)
F (N)	E = 70000 N/mm^2
L (mm)	m' (kg/mm); m' = m/1000; m (p. 2-3 ... 2-6)
I (cm^4)	g = 9.81 $m/s^2 \approx 10\ m/s^2$

Profile slot load-bearing capacity

Static load limit values of slot (beginning of plastic deformation) **for connectors with the largest thread in each case**

			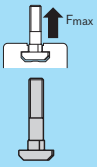 T-bolt	 T-nut	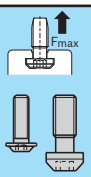 Central bolt	 Swivel-in sliding block	 Sliding block
		20x20, 20x20R 10x40 20x40, 20x60 20x40x40	1700 N	1700 N	2000 N	–	3000 N
		30x30, 30x30R 30x30°, 30x45°, 30x60° 11x20, 15x120 30x45, 30x60, 30x60x60 30x90, 30x120	4000 N	4000 N	5000 N	2200 N	6000 N
	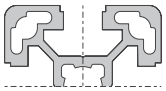	90x90SL 40x40L, 40x40L R 40x30°, 40x45°, 40x60° 40x80L, 40x120L, 40x160L 40x80x80L 80x80L 80x120L, 80x160L 45x45L, 45x45L R 45x30°, 45x45°, 45x60° 15x22.5 , 15x180, 22.5x45 45x90L, 45x90x90L 50x50L, 50x50L R 50x100L , 50x150L 100x100L ,100x200L 60x60L	6000 N 7000 N	6000 N 7000 N	9000 N 10000 N	8000 N 9000 N	11000 N 12000 N
	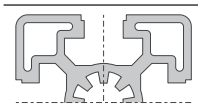	45x45 60x60 90x90L 22.5x180 45x60 45x90 , 45x180 90x180L	12000 N	12000 N	15000 N	13000 N	17000 N
	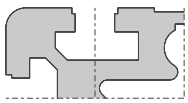	45x270 60x90 90x90 90x180 90x360	18000 N	18000 N	22000 N	18000 N	24000 N

Load-bearing capacity of profile connection

The specified tightening and loading limit values were determined as an example in (dry) trials. Safety factors and building regulations in accordance with the law and accepted engineering practices must be observed.

Static load limit values of the connection (beginning of plastic deformation)

	D	Slot			
	8	6 / 6	2.5 Nm	450 N	18 Nm
	11	8 / 8	12 Nm	500 N	40 Nm
	11	8 / 10	12 Nm	2000 N	70 Nm
	17	10 / 10	25 Nm	4000 N	140 Nm
Quick connector (p. 3-54)	9.8	10 / 10	6 Nm	800 N	50 Nm

	Slot						
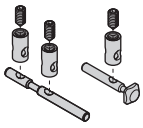	30x30	8	12 Nm	1100 N	35 Nm	24 Nm	650 N	40 Nm
	40x40L	10	25 Nm	1500 N	110 Nm	100 Nm	1000 N	80 Nm
	45x45L	10	25 Nm	1500 N	120 Nm	110 Nm	1000 N	95 Nm
	45x45	10	25 Nm	1500 N	140 Nm	145 Nm	1100 N	180 Nm
Quick connector, bendable (p. 3-57)	50x50L	10	25 Nm	1500 N	150 Nm	160 Nm	1100 N	180 Nm

		Slot			F_{max}	M_{max}	M_{max}
	ø11, L=30	8	↻	6 Nm	2500 N	60 Nm	20 Nm
	ø17, L=40	10	↻	25 Nm	4000 N	180 Nm	40 Nm
	ø17, L=45	10	↻	25 Nm	4000 N	180 Nm	60 Nm
	ø17, L=50	10	↻	25 Nm	4000 N	200 Nm	65 Nm
	ø17, L=60	10	↻	25 Nm	4000 N	200 Nm	80 Nm
	ø17, L=80	10	↻	25 Nm	5000 N	800 Nm	170 Nm
	ø17, L=90	10	↻	25 Nm	5000 N	800 Nm	200 Nm
	ø17, L=100	10	↻	25 Nm	5000 N	1000 Nm	480 Nm
Bolt connector (p. 3-60)	ø28, L=22.5	10	↻	25 Nm	2000 N	–	–

		Slot			F_{max}	M_{max}
	S6	6	↻	10 Nm	500 N	8 Nm
	S8	8	↻	25 Nm	800 N	43 Nm
	S12	10	↻	35 Nm	1300 N	80 Nm
Central bolt (p. 3-41)	M12	10	↻	35 Nm	3000 N	80 Nm

6 8 10		Slot				M_{max}	$\frac{M_{max}}{2}$ $\frac{M_{max}}{2}$
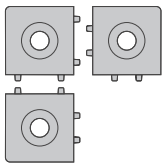	20/2	6	↻	10 Nm		18 Nm	
	20/3	6	↻	10 Nm			23 Nm
	30/2	8	↻	25 Nm		80 Nm	
	30/3	8	↻	25 Nm			85 Nm
	40/2	10	↻	35 Nm		60 Nm	
	40/3	10	↻	35 Nm			70 Nm
	45/2	10	↻	35 Nm	45x45L	150 Nm	
					45x45	200 Nm	
	45/3	10	↻	35 Nm	45x45L		170 Nm
					45x45		240 Nm
	50/2	10	↻	35 Nm		120 Nm	
Cubic connector (p. 3-43)	50/3	10	↻	35 Nm			140 Nm

8 10		Profile	Slot			F_{max}	M_{max}	M_{max}
	SV8	30x...	8	↻	6 Nm	1000 N	35 Nm	15 Nm
	SV 10L	45x... L	10	↻	15 Nm	3500 N	110 Nm	30 Nm
	SV 10	40x..., 45x...	10	↻	25 Nm (M8) 5 Nm (M5)	3500 N	110 Nm	30 Nm
Tensioning connector (p. 3-12)		60x...	10	↻	15 Nm	3500 N	195 Nm	60 Nm

8 10	Slot				F_{max}	M_{max}	M_{max}
	8 / 8	↻	2.5 Nm (M4) 10 Nm (M8)	1000 N	35 Nm	15 Nm
	8 / 10	↻	2.5 Nm (M4) 10 Nm (M8)	1000 N	35 Nm	15 Nm
Slot connector (p. 3-13)	10 / 10	↻	7 Nm (M6) 12 Nm (M10)	3000 N	110 Nm	30 Nm

8 10	Slot			F_{max}	M_{max}
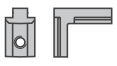	8 / 8	↻	12 Nm	2200 N	50 Nm
	10 / 10	↻	15 Nm	2800 N	100 Nm
Inner bracket (p. 3-14)					

6 8 10	Slot			F_{max}	M_{max}
	6 / 6	↻	3 Nm	600 N	10 Nm
	8 / 8	↻	12 Nm	2500 N	50 Nm
Inner bracket R (p. 3-15)	10 / 10	↻	15 Nm	3000 N	100 Nm



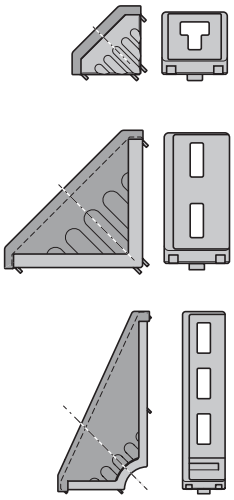

	Slot		F_{max}	M_{max}	M_{max}	M_{max}
20/20	6	3 Nm	700 N	6 Nm	25 Nm	–
20/40	6	3 Nm	1400 N	15 Nm	50 Nm	8 Nm
30/30	8	10 Nm	1250 N	25 Nm	75 Nm	–
30/60	8	10 Nm	2500 N	100 Nm	170 Nm	25 Nm
30/120	8	10 Nm	3750 N	100 Nm		47 Nm
60/60-8	8	10 Nm	5000 N	320 Nm	370 Nm	110 Nm
60/60-10	10	25 Nm	3000 N	125 Nm	150 Nm	–
40/40	10	25 Nm	3000 N	55 Nm	145 Nm	35 Nm
40/80	10	25 Nm	6000 N	180 Nm	400 Nm	60 Nm
40/160	10	25 Nm	9000 N	250 Nm		60 Nm
80/80	10	25 Nm	14000 N	500 Nm	1000 Nm	400 Nm
45/45	10	25 Nm	3000 N	60 Nm	160 Nm	–
45/90	10	25 Nm	6000 N	180 Nm	400 Nm	60 Nm
45/180	10	25 Nm	9000 N	250 Nm		65 Nm
90/90	10	25 Nm	12000 N	370 Nm	800 Nm	200 Nm
43x42	10	25 Nm	2000 N	–	160 Nm	–
50/50	10	25 Nm	4000 N	125 Nm	250 Nm	38 Nm
50/100	10	25 Nm	7500 N	300 Nm	600 Nm	73 Nm
100/100	10	25 Nm	15000 N	550 Nm	1100 Nm	480 Nm

Bracket (p. 3-18)

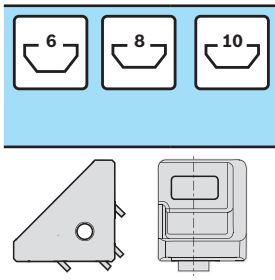

	Slot		F_{max}	M_{max}	M_{max}
S 20x20	6	2.5 Nm	700 N	3.6 Nm	25 Nm
S 30x30	8	8.5 Nm	1250 N	16 Nm	75 Nm
S 40x40	10	25 Nm	3000 N	36 Nm	160 Nm
S 45x45	10	25 Nm	3000 N	36 Nm	160 Nm

Bracket S (p. 7-8)

8	10		Slot		F_{max}	M_{max}
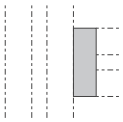		30x30	8	↻ 25 Nm (M8) / 5 Nm (M5)	4000 N	80 Nm
		40x40	10	↻ 35 Nm (S12) / 10 Nm (M6)	9000 N	150 Nm
		45x45	10	↻ 35 Nm (S12) / 10 Nm (M6)	9000 N	200 Nm
		50x50	10	↻ 35 Nm (S12) / 10 Nm (M6)	10000 N	170 Nm

T-connector (p. 3-51)

8	10		Slot		M_{max}
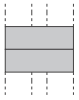		30x30	8	↻ 25 Nm (M8) / 5 Nm (M5)	81 Nm
		40x40	10	↻ 35 Nm (S12) / 10 Nm (M6)	170 Nm
		45x45	10	↻ 35 Nm (S12) / 10 Nm (M6)	200 Nm
		50x50	10	↻ 35 Nm (S12) / 10 Nm (M6)	180 Nm

End connector (p. 3-49)

Profile connection load-bearing capacity with radial compensation (p. 2-85)

			Slot		F_{max}	M_{max}	M_{max}
	30x30	S8	8	↻ 25 Nm	600 N	37 Nm	28 Nm
			8 / 8	↻ 12 Nm	600 N	37 Nm	28 Nm
	40x40	M12 S12	10	↻ 30 Nm	1000 N	47 Nm	55 Nm
			10 / 10	↻ 22 Nm	1000 N	47 Nm	55 Nm
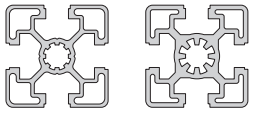	45x45	S12 M12	10	↻ 35 Nm	1200 N	53 Nm	59 Nm
			10 / 10	↻ 25 Nm	1200 N	53 Nm	59 Nm

Load-bearing capacity data for EcoSafe protective frame and EcoSafe support

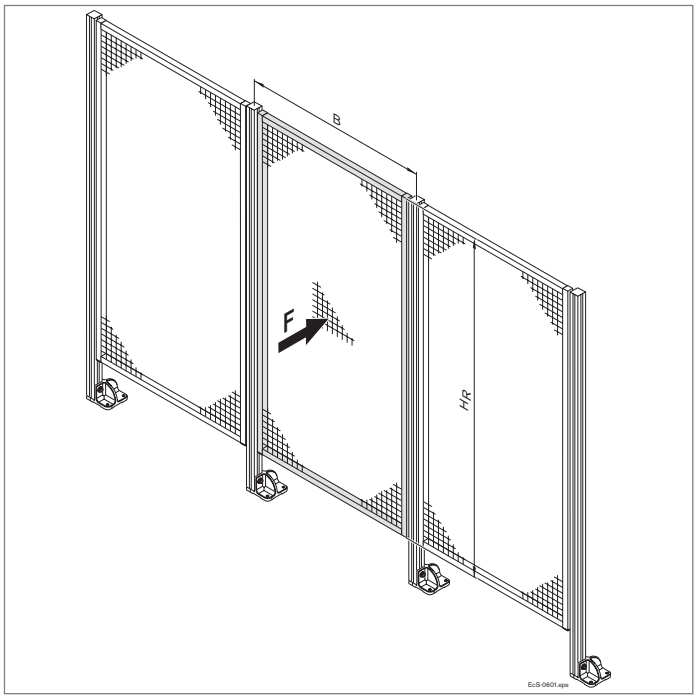

EcoSafe protective frames withstand high loadings.
The permissible forces which act on the protective grille have been determined in series of tests.
Test structure: In the case of a protective fence consisting of 3 frames, the woven wire grille in the middle frame is exposed to a maximum load force acting on its center.

Protective frame	**HR** (mm)	**B** (mm)	**F** (N)	**No.**
	1800	750	1650	**3 842 554 283**
	1800	1000	1100	**3 842 554 284**
	1800	1500	800	**3 842 554 285**

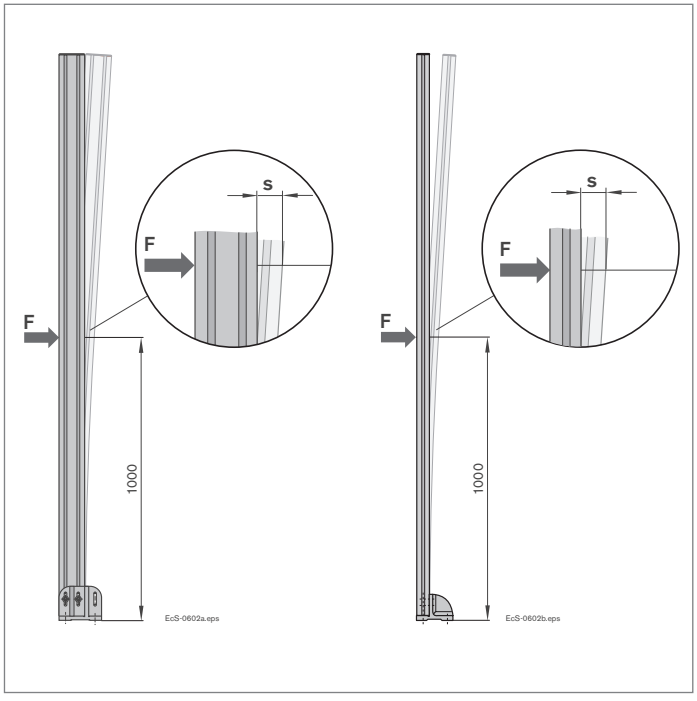

The force required to deflect the EcoSafe system supports has been determined in series of tests.
Test structure: A force acts on an installed system support at a height of 1 m (spring balance).

F (N)		**100**	**150**	**300**	**450**	**600**
s (mm)	45x45	4	6	13	21	31
	45x90	2	3	6	12	18

Material number overview

0 842 901 309	2-81, 12-2
1 845 719 000	2-87
3 842 071 941	12-38
3 842 146 813	3-33
3 842 146 815	3-34
3 842 146 848	3-34
3 842 146 877	13-7, 13-8, 13-17, 13-18, 13-31, 13-32
3 842 146 920	11-11
3 842 146 972	3-62
3 842 184 738	2-80, 7-6
3 842 191 175	3-50
3 842 191 182	2-84
3 842 191 194	8-31
3 842 218 940	12-17
3 842 218 941	12-17
3 842 218 942	12-17
3 842 218 953	12-2
3 842 259 790	6-24
3 842 259 791	6-24
3 842 259 792	6-24
3 842 259 793	6-24
3 842 259 794	6-24
3 842 305 766	7-12
3 842 305 767	7-12
3 842 305 768	7-12
3 842 311 950	6-5
3 842 311 951	6-5
3 842 311 956	6-5
3 842 345 081	3-6, 10-7
3 842 348 526	3-26
3 842 352 009	3-26
3 842 352 061	6-5
3 842 352 085	5-4
3 842 500 287	9-5
3 842 501 576	12-18
3 842 501 578	12-18
3 842 501 587	3-20
3 842 501 751	3-4
3 842 501 752	3-4
3 842 501 753	3-4
3 842 502 137	3-20
3 842 502 257	6-4
3 842 502 683	4-4
3 842 502 684	4-7
3 842 502 687	4-8
3 842 502 688	4-8
3 842 503 242	5-6
3 842 504 760	3-31
3 842 504 790	6-7
3 842 505 144	4-7, 4-8, 4-13
3 842 508 087	5-5
3 842 508 088	5-5
3 842 508 967	12-38
3 842 510 078	3-7
3 842 510 145	5-5
3 842 510 165	9-5
3 842 510 462	9-5, 12-5
3 842 510 464	9-5
3 842 511 352	6-6
3 842 511 893	6-5
3 842 513 517	12-16
3 842 513 576	2-48
3 842 513 581	2-21
3 842 513 646	13-10
3 842 513 648	13-36, 13-43
3 842 514 524	14-9
3 842 514 567	6-10
3 842 514 568	6-5
3 842 514 928	3-7
3 842 514 929	3-7
3 842 514 930	3-7
3 842 514 931	3-7, 12-7
3 842 515 244	7-13
3 842 515 366	6-19
3 842 515 367	6-19
3 842 515 457	6-16
3 842 515 459	6-16
3 842 515 473	3-30
3 842 515 531	10-22
3 842 515 547	3-30
3 842 515 863	10-22
3 842 516 175	6-10
3 842 516 598	8-26
3 842 516 669	3-9
3 842 516 685	3-9
3 842 516 694	8-28
3 842 516 715	8-10
3 842 516 729	14-4
3 842 516 731	14-4
3 842 516 837	7-11
3 842 516 838	7-11
3 842 516 845	4-13
3 842 516 846	4-13, 12-7, 12-8, 12-9, 12-10
3 842 516 847	4-5, 4-13
3 842 516 848	4-13
3 842 516 849	4-14
3 842 516 850	4-14
3 842 516 851	4-14
3 842 516 905	17-3
3 842 516 908	17-3
3 842 517 132	3-43, 3-44
3 842 517 179	2-11
3 842 517 180	2-12
3 842 517 183	2-12
3 842 517 543	3-44
3 842 518 204	2-16, 2-83
3 842 518 205	2-35, 2-83
3 842 518 367	2-84
3 842 518 368	2-84
3 842 518 369	2-84
3 842 518 424	3-31
3 842 518 427	3-39
3 842 518 492	8-26
3 842 518 650	14-6
3 842 518 738	8-23
3 842 518 743	6-4
3 842 518 797	9-3
3 842 518 798	9-3
3 842 518 856	13-15
3 842 518 896	13-13
3 842 518 897	13-25
3 842 518 898	13-39
3 842 519 318	3-47
3 842 519 319	3-47
3 842 519 321	3-48
3 842 519 465	17-2
3 842 519 658	2-12
3 842 520 000	12-21
3 842 520 802	3-52
3 842 520 922	2-62
3 842 521 216	3-39
3 842 521 510	2-65
3 842 521 580	3-30, 12-5
3 842 521 817	6-5
3 842 522 012	17-3
3 842 522 087	17-2
3 842 522 124	4-13
3 842 522 301	6-5
3 842 522 303	6-5
3 842 522 345	10-9
3 842 522 475	10-20
3 842 522 476	10-20
3 842 522 477	10-20
3 842 522 479	8-12
3 842 522 481	10-10
3 842 523 014	11-2
3 842 523 092	5-4
3 842 523 093	5-6
3 842 523 094	5-6
3 842 523 097	5-3
3 842 523 098	5-3
3 842 523 102	5-6
3 842 523 135	3-4
3 842 523 140	3-7
3 842 523 142	3-7
3 842 523 145	3-9
3 842 523 165	10-12
3 842 523 166	10-12
3 842 523 170	10-13
3 842 523 205	12-14
3 842 523 206	12-14
3 842 523 207	12-15
3 842 523 209	12-14
3 842 523 210	12-14
3 842 523 211	12-15
3 842 523 212	12-7, 12-13
3 842 523 213	12-13
3 842 523 243	8-11
3 842 523 254	2-84
3 842 523 256	2-84
3 842 523 258	2-84
3 842 523 308	10-19
3 842 523 320	8-12
3 842 523 438	3-7
3 842 523 493	7-3
3 842 523 494	7-3
3 842 523 508	3-19
3 842 523 511	3-19
3 842 523 516	3-19
3 842 523 517	3-19
3 842 523 520	3-19
3 842 523 525	3-20
3 842 523 528	3-20
3 842 523 530	3-20
3 842 523 532	3-20
3 842 523 537	3-20, 3-21, 3-22
3 842 523 538	3-21
3 842 523 541	3-21
3 842 523 546	3-22
3 842 523 549	3-22
3 842 523 551	3-22
3 842 523 553	3-22
3 842 523 558	3-24
3 842 523 561	3-24
3 842 523 567	3-25
3 842 523 570	3-25
3 842 523 575	3-26
3 842 523 578	3-26
3 842 523 583	3-25
3 842 523 587	3-21
3 842 523 593	3-24
3 842 523 872	3-44
3 842 523 873	3-44
3 842 523 874	3-46
3 842 523 875	3-43
3 842 523 876	3-44
3 842 523 877	3-45
3 842 523 918	12-42
3 842 523 920	3-6
3 842 523 921	3-6
3 842 523 922	3-6
3 842 523 925	3-6
3 842 524 012	3-5
3 842 524 025	7-5
3 842 524 027	7-5
3 842 524 058	2-55
3 842 524 061	2-55
3 842 524 064	2-55
3 842 524 067	2-55
3 842 524 153	2-65, 12-5
3 842 524 163	10-14
3 842 524 164	10-14
3 842 524 165	10-15
3 842 524 166	10-15
3 842 524 469	6-11
3 842 524 476	3-51
3 842 524 490	12-5
3 842 524 499	6-19
3 842 524 500	6-19
3 842 524 622	8-26
3 842 524 623	8-26
3 842 524 986	9-8
3 842 525 014	10-21
3 842 525 443	12-27
3 842 525 481	8-23
3 842 525 737	12-28
3 842 525 738	12-28
3 842 525 739	12-28
3 842 525 740	12-28
3 842 525 741	12-28
3 842 525 742	12-28
3 842 525 767	8-23
3 842 525 780	10-17
3 842 525 781	10-16
3 842 525 782	10-16
3 842 525 821	8-11
3 842 525 822	8-11
3 842 525 823	8-11
3 842 525 833	10-18
3 842 525 946	8-13
3 842 525 947	8-13
3 842 526 003	3-49
3 842 526 034	12-27
3 842 526 410	13-7, 13-9
3 842 526 411	13-7, 13-10
3 842 526 412	13-17, 13-21
3 842 526 413	13-17, 13-21
3 842 526 414	13-31, 13-35
3 842 526 415	13-31, 13-35
3 842 526 416	13-12, 13-14
3 842 526 417	13-12, 13-15
3 842 526 422	13-22, 13-29
3 842 526 560	3-34, 6-12
3 842 526 561	6-12
3 842 526 589	14-6
3 842 526 626	2-64
3 842 526 627	2-64
3 842 526 628	2-64
3 842 526 660	2-64
3 842 526 665	2-64
3 842 526 671	2-63
3 842 526 672	2-63
3 842 526 673	2-63
3 842 526 786	10-17
3 842 526 787	10-17
3 842 526 817	2-14
3 842 526 863	13-24, 13-28
3 842 526 865	13-24, 13-28

3 842 526 867	13-38, 13-42
3 842 526 869	13-38, 13-42
3 842 526 893	13-47
3 842 526 894	13-47
3 842 526 895	13-47
3 842 527 174	3-41
3 842 527 186	6-5
3 842 527 553	6-11, 10-7
3 842 527 738	16-6
3 842 527 851	16-6
3 842 528 009	16-9
3 842 528 189	6-13
3 842 528 191	6-13
3 842 528 539	4-13
3 842 528 540	4-13
3 842 528 574	14-3
3 842 528 577	14-3
3 842 528 586	14-5
3 842 528 588	14-5
3 842 528 590	14-5
3 842 528 593	3-41
3 842 528 715	3-6
3 842 528 718	3-6
3 842 528 721	3-6, 10-7
3 842 528 724	3-6
3 842 528 727	3-6
3 842 528 730	3-6
3 842 528 735	3-7, 12-8, 12-9, 12-10
3 842 528 738	3-7
3 842 528 741	3-7
3 842 528 744	3-7
3 842 528 746	3-40
3 842 528 967	3-22
3 842 529 005	3-23
3 842 529 006	3-23
3 842 529 010	3-45
3 842 529 011	3-45
3 842 529 012	3-46
3 842 529 013	3-46
3 842 529 020	3-30
3 842 529 024	6-5
3 842 529 025	6-4
3 842 529 294	3-9
3 842 529 295	3-9
3 842 529 296	3-9
3 842 529 297	3-9
3 842 529 298	3-9
3 842 529 299	3-9
3 842 529 300	3-9
3 842 529 319	3-8
3 842 529 320	3-8
3 842 529 321	3-8
3 842 529 323	3-8
3 842 529 324	3-8
3 842 529 325	3-8
3 842 529 327	3-8
3 842 529 339	2-25
3 842 529 341	2-29
3 842 529 345	2-31
3 842 529 347	2-32
3 842 529 349	2-34
3 842 529 351	2-50
3 842 529 355	2-51
3 842 529 357	2-52
3 842 529 359	2-28
3 842 529 361	2-25
3 842 529 363	2-26
3 842 529 365	2-26
3 842 529 367	2-26
3 842 529 371	2-27
3 842 529 373	2-27
3 842 529 375	2-27
3 842 529 381	2-28
3 842 529 383	3-22
3 842 529 386	3-23
3 842 529 404	3-48
3 842 529 416	6-6
3 842 529 417	6-6
3 842 529 761	7-5
3 842 529 850	16-4
3 842 529 881	3-40
3 842 529 931	12-40
3 842 529 933	12-41
3 842 530 231	3-24
3 842 530 235	3-41
3 842 530 236	3-41, 3-45, 3-46, 10-7
3 842 530 241	9-7
3 842 530 259	3-27
3 842 530 260	3-27
3 842 530 281	3-4
3 842 530 283	3-4
3 842 530 285	3-4, 13-7
3 842 530 287	3-4, 13-17, 13-31
3 842 530 306	2-87
3 842 530 316	3-8
3 842 530 321	3-8
3 842 530 325	3-42
3 842 530 326	3-42
3 842 530 329	12-8, 12-9, 12-10, 12-13
3 842 530 352	8-14
3 842 530 353	8-14
3 842 530 360	3-24
3 842 530 361	3-28
3 842 530 381	3-27
3 842 530 382	3-27
3 842 530 400	14-3
3 842 530 417	12-42
3 842 530 460	3-28
3 842 530 864	12-42
3 842 531 552	16-7
3 842 532 195	3-51
3 842 532 196	3-49
3 842 532 198	3-52
3 842 532 199	3-50
3 842 532 274	3-30
3 842 532 363	11-2
3 842 532 505	2-68, 12-37
3 842 532 508	12-37
3 842 532 608	2-67, 12-34
3 842 532 676	12-41
3 842 532 695	2-67, 12-34
3 842 532 696	2-68, 12-35
3 842 532 697	2-67, 12-34
3 842 532 752	12-20
3 842 532 862	12-20
3 842 532 865	12-20
3 842 532 866	12-20
3 842 532 867	12-20
3 842 532 870	12-20
3 842 532 871	12-24
3 842 532 878	2-70
3 842 532 879	2-70
3 842 532 880	12-20
3 842 532 881	12-20
3 842 532 883	12-20
3 842 532 884	12-20
3 842 532 886	12-19
3 842 532 887	12-19
3 842 533 305	6-15
3 842 533 306	6-15
3 842 533 307	6-14
3 842 533 308	6-14
3 842 533 309	6-14
3 842 533 310	6-5
3 842 533 841	12-45, 16-4
3 842 533 901	6-15
3 842 535 115	2-66, 12-19
3 842 535 118	2-70
3 842 535 121	12-22
3 842 535 122	12-22
3 842 535 124	12-21
3 842 535 136	2-86
3 842 535 176	2-21
3 842 535 364	12-23
3 842 535 458	3-55
3 842 535 459	3-55
3 842 535 464	3-55
3 842 535 465	3-56
3 842 535 466	3-56
3 842 535 571	3-16
3 842 535 572	3-14
3 842 535 573	3-15
3 842 535 574	3-14
3 842 535 575	3-15
3 842 535 576	3-16
3 842 535 577	3-16
3 842 535 578	3-14
3 842 535 617	3-61
3 842 535 619	3-61
3 842 535 625	3-17
3 842 535 626	3-17
3 842 535 627	3-17
3 842 535 629	3-58
3 842 535 630	3-57
3 842 535 634	3-57
3 842 535 635	3-58
3 842 535 637	2-58
3 842 535 645	13-7, 13-9
3 842 535 662	13-7, 13-8, 13-12, 13-13
3 842 535 663	13-31, 13-33, 13-38, 13-40
3 842 535 664	13-17, 13-19, 13-24, 13-26
3 842 535 665	13-33, 13-40
3 842 535 666	13-19, 13-26
3 842 535 667	12-28
3 842 535 668	12-28
3 842 535 669	6-16
3 842 535 670	6-16
3 842 535 676	11-2
3 842 535 680	13-17, 13-22, 13-24, 13-29, 13-31, 13-36, 13-38, 13-43
3 842 535 681	13-12, 13-15
3 842 535 682	13-7, 13-10
3 842 535 683	12-28
3 842 535 684	8-4
3 842 535 719	5-4
3 842 535 721	5-3
3 842 535 835	2-70, 2-71
3 842 535 921	11-2
3 842 536 002	2-70
3 842 536 054	12-31
3 842 536 055	12-29
3 842 536 056	12-29
3 842 536 057	12-29
3 842 536 119	3-33
3 842 536 120	3-33
3 842 536 121	3-33
3 842 536 122	3-33
3 842 536 123	3-33
3 842 536 124	3-33
3 842 536 125	3-33
3 842 536 126	3-33
3 842 536 148	7-11, 17-4
3 842 536 207	6-9
3 842 536 268	12-42
3 842 536 270	12-42
3 842 536 295	16-7
3 842 536 320	17-3
3 842 536 470	6-5
3 842 536 472	2-19
3 842 536 475	2-11
3 842 536 478	2-11
3 842 536 481	2-33
3 842 536 484	2-29
3 842 536 489	7-8
3 842 536 490	7-8
3 842 536 491	7-8
3 842 536 531	8-29
3 842 536 532	8-29
3 842 536 533	8-32
3 842 536 536	8-32
3 842 536 537	8-32
3 842 536 540	8-32
3 842 536 560	6-6
3 842 536 562	6-6
3 842 536 564	6-6
3 842 536 566	6-6
3 842 536 581	6-8
3 842 536 599	3-4
3 842 536 600	3-4
3 842 536 601	3-4
3 842 536 602	3-4
3 842 536 603	3-4
3 842 536 604	3-4
3 842 536 605	3-4
3 842 536 606	3-4
3 842 536 669	3-8
3 842 536 670	7-8
3 842 536 671	7-8
3 842 536 672	7-8
3 842 536 673	3-9
3 842 536 675	3-9
3 842 536 676	3-9
3 842 536 694	6-3
3 842 536 695	6-3
3 842 536 696	6-3
3 842 536 701	6-21
3 842 536 722	12-25
3 842 536 724	12-26
3 842 536 729	3-32
3 842 536 730	2-71
3 842 536 736	6-20
3 842 536 737	6-20
3 842 536 738	6-20
3 842 536 746	6-9
3 842 536 787	3-39
3 842 536 792	12-41
3 842 536 811	6-2
3 842 536 812	6-2
3 842 537 013	3-54
3 842 537 100	2-45
3 842 537 102	2-40
3 842 537 113	2-86
3 842 537 116	2-86
3 842 537 119	2-86
3 842 537 135	2-87
3 842 537 163	12-28
3 842 537 164	12-28
3 842 537 206	6-3

3 842 537 220	6-2	3 842 537 958	12-20	3 842 539 339	16-11	3 842 542 694	3-7
3 842 537 222	6-2	3 842 537 959	12-20	3 842 539 340	16-4	3 842 542 696	2-62
3 842 537 223	6-2	3 842 537 960	12-20	3 842 539 344	16-12	3 842 542 698	2-62
3 842 537 224	6-2	3 842 537 961	12-20	3 842 539 345	16-5	3 842 542 736	3-11
3 842 537 225	6-2	3 842 537 962	12-20	3 842 539 412	13-8	3 842 542 737	3-11
3 842 537 226	6-2	3 842 537 963	12-20	3 842 539 414	13-13	3 842 543 272	2-78
3 842 537 227	6-2	3 842 537 964	12-20	3 842 539 415	13-18, 13-25	3 842 543 311	2-80
3 842 537 228	6-2	3 842 537 965	12-20	3 842 539 416	13-32, 13-39	3 842 543 321	8-7
3 842 537 229	6-2	3 842 538 064	12-21	3 842 539 494	16-10	3 842 543 322	8-7
3 842 537 230	6-2	3 842 538 065	12-21	3 842 539 495	16-10	3 842 543 323	8-7
3 842 537 231	6-2	3 842 538 093	2-86	3 842 539 496	16-11	3 842 543 324	8-7
3 842 537 232	6-2	3 842 538 094	12-19	3 842 539 497	16-11	3 842 543 325	8-7
3 842 537 321	12-27	3 842 538 208	16-5	3 842 539 498	16-9	3 842 543 326	8-7
3 842 537 477	2-71	3 842 538 209	16-4	3 842 539 499	16-9	3 842 543 327	8-7
3 842 537 556	14-2	3 842 538 245	12-21	3 842 539 500	16-11	3 842 543 328	8-7
3 842 537 583	12-31	3 842 538 275	4-12	3 842 539 501	16-12	3 842 543 329	8-7
3 842 537 584	12-31	3 842 538 276	4-12	3 842 539 505	16-12	3 842 543 330	8-7
3 842 537 592	12-32	3 842 538 287	2-33	3 842 539 613	16-5	3 842 543 331	8-7
3 842 537 593	12-32	3 842 538 296	2-46	3 842 539 799	4-8	3 842 543 332	8-7
3 842 537 650	2-86	3 842 538 297	2-46	3 842 539 800	4-8	3 842 543 333	8-7
3 842 537 651	2-86	3 842 538 298	2-42	3 842 539 826	16-12	3 842 543 334	8-7
3 842 537 652	2-86	3 842 538 299	2-41	3 842 539 894	15-2	3 842 543 371	8-3
3 842 537 657	12-26	3 842 538 330	2-30	3 842 539 895	15-3	3 842 543 372	8-3
3 842 537 660	12-22	3 842 538 334	2-33	3 842 539 896	15-3	3 842 543 401	4-5
3 842 537 661	12-22	3 842 538 372	12-25	3 842 539 897	15-3	3 842 543 402	4-5
3 842 537 664	12-32	3 842 538 388	16-3	3 842 539 898	15-3	3 842 543 403	4-6
3 842 537 665	12-32	3 842 538 389	16-4	3 842 540 012	15-2	3 842 543 404	4-6
3 842 537 679	2-60	3 842 538 489	3-12	3 842 540 173	6-12	3 842 543 480	2-76
3 842 537 687	12-25	3 842 538 490	3-12	3 842 540 668	6-12	3 842 543 494	2-81
3 842 537 718	2-70, 2-71	3 842 538 491	3-12	3 842 540 954	2-25	3 842 544 525	8-6
3 842 537 720	12-23	3 842 538 555	6-3	3 842 540 955	2-35	3 842 544 526	8-6
3 842 537 740	12-31	3 842 538 556	6-3	3 842 541 008	12-29	3 842 544 527	8-6
3 842 537 776	12-24	3 842 538 557	6-3	3 842 541 173	2-75	3 842 544 528	8-6
3 842 537 777	12-24	3 842 538 558	6-3	3 842 541 175	2-75	3 842 544 529	8-6
3 842 537 778	12-24	3 842 538 559	6-3	3 842 541 178	2-76	3 842 544 530	8-6
3 842 537 779	12-24	3 842 538 607	4-2, 4-6, 4-13	3 842 541 181	2-76	3 842 544 531	8-6
3 842 537 803	12-21	3 842 538 656	3-49	3 842 541 183	2-75	3 842 544 562	8-9
3 842 537 806	12-21	3 842 538 657	3-49	3 842 541 185	2-74	3 842 544 637	2-81
3 842 537 807	12-21	3 842 538 658	3-50	3 842 541 187	2-78	3 842 544 661	8-3
3 842 537 812	2-49	3 842 538 673	6-3	3 842 541 190	2-78	3 842 544 797	2-61, 2-79
3 842 537 816	2-13	3 842 538 674	6-3	3 842 541 193	2-79	3 842 544 832	14-7
3 842 537 818	2-13	3 842 538 675	6-3	3 842 541 226	6-19	3 842 544 833	14-8
3 842 537 819	2-13	3 842 538 676	6-3	3 842 541 228	6-19	3 842 544 834	14-7
3 842 537 821	2-22	3 842 538 677	6-3	3 842 541 230	6-19	3 842 544 835	14-7
3 842 537 823	2-44	3 842 538 678	6-3	3 842 541 232	6-19	3 842 544 836	14-8
3 842 537 824	2-31	3 842 538 679	6-3	3 842 541 234	6-19	3 842 544 837	14-8
3 842 537 825	2-50	3 842 538 680	6-3	3 842 541 236	6-19	3 842 544 875	6-12
3 842 537 826	2-51	3 842 538 683	4-4	3 842 541 238	6-19	3 842 546 519	9-4
3 842 537 827	2-30	3 842 538 684	4-5	3 842 541 240	6-19	3 842 546 560	10-11
3 842 537 828	2-34	3 842 538 685	4-5	3 842 541 242	6-19	3 842 546 564	4-2
3 842 537 861	3-32	3 842 538 686	4-6	3 842 541 244	6-19	3 842 546 625	3-35
3 842 537 862	3-32	3 842 538 687	4-6	3 842 541 246	3-5	3 842 546 626	3-35
3 842 537 888	12-41	3 842 538 696	3-51	3 842 541 296	2-79	3 842 546 627	3-35
3 842 537 889	12-41	3 842 538 697	3-51	3 842 541 393	3-9	3 842 546 628	3-36
3 842 537 890	12-41	3 842 538 698	3-52	3 842 541 409	3-5	3 842 546 629	3-36
3 842 537 894	12-30	3 842 538 703	3-30	3 842 541 410	3-56	3 842 546 630	3-36
3 842 537 895	12-30	3 842 538 704	3-30	3 842 541 412	3-55	3 842 546 632	3-37
3 842 537 896	12-30	3 842 538 705	3-30	3 842 541 807	2-25, 2-83	3 842 546 717	6-13
3 842 537 897	12-30	3 842 538 706	3-31	3 842 541 814	2-66, 12-19	3 842 546 718	6-13
3 842 537 898	12-30	3 842 538 829	16-3	3 842 541 937	2-20	3 842 546 744	14-8
3 842 537 899	12-30	3 842 538 832	6-3	3 842 541 939	2-20	3 842 546 745	14-8
3 842 537 900	12-30	3 842 538 833	6-3	3 842 542 146	10-10	3 842 547 227	16-9
3 842 537 901	12-30	3 842 538 834	6-3	3 842 542 328	7-9	3 842 547 228	16-10
3 842 537 911	12-26	3 842 538 835	6-3	3 842 542 329	7-9	3 842 547 461	3-38
3 842 537 944	12-19	3 842 538 836	6-3	3 842 542 330	7-9	3 842 547 707	12-45
3 842 537 945	12-19	3 842 538 932	6-3	3 842 542 667	6-8	3 842 547 718	12-45
3 842 537 947	12-19	3 842 538 934	6-3	3 842 542 668	6-9	3 842 547 729	12-45
3 842 537 948	12-20	3 842 538 955	2-84	3 842 542 669	6-9	3 842 547 806	3-9
3 842 537 950	12-32	3 842 538 957	2-84	3 842 542 692	3-7	3 842 547 807	3-9
3 842 537 951	12-23	3 842 539 120	13-12, 13-14	3 842 542 693	3-7	3 842 547 808	3-9

3 842 547 811	3-7
3 842 547 812	3-7
3 842 547 813	3-7
3 842 547 814	3-7
3 842 547 815	3-7
3 842 547 816	3-7
3 842 547 817	3-7
3 842 547 821	3-9
3 842 547 822	3-9
3 842 547 823	3-9
3 842 547 824	3-9
3 842 547 825	3-8
3 842 547 826	3-8
3 842 547 827	2-45
3 842 547 835	6-19
3 842 547 836	6-19
3 842 547 837	6-19
3 842 547 838	6-19
3 842 547 839	6-19
3 842 547 840	6-19
3 842 547 868	4-11
3 842 547 869	4-11
3 842 547 890	6-22
3 842 547 971	12-45
3 842 547 982	14-6
3 842 547 990	12-45
3 842 548 117	2-74
3 842 548 118	2-75
3 842 548 119	2-75
3 842 548 120	2-79
3 842 548 121	2-77
3 842 548 122	2-77
3 842 548 123	2-76
3 842 548 126	2-80
3 842 548 127	2-80
3 842 548 128	2-81
3 842 548 129	2-74
3 842 548 130	2-74
3 842 548 131	2-81
3 842 548 132	2-82
3 842 548 700	3-43, 3-44
3 842 548 701	3-44
3 842 548 702	3-45, 3-46
3 842 548 703	3-46
3 842 548 704	3-43, 3-44
3 842 548 705	3-44
3 842 548 706	3-45, 3-46
3 842 548 707	3-46
3 842 548 708	3-47
3 842 548 709	3-47
3 842 548 710	3-48
3 842 548 711	3-48
3 842 548 712	3-47
3 842 548 713	3-47
3 842 548 714	3-48
3 842 548 715	3-48
3 842 548 716	3-47
3 842 548 717	3-47
3 842 548 718	3-48
3 842 548 719	3-48
3 842 548 720	3-47
3 842 548 721	3-47
3 842 548 722	3-48
3 842 548 723	3-48
3 842 548 742	2-11, 2-13
3 842 548 743	2-11, 2-13
3 842 548 744	2-16, 2-19, 2-20
3 842 548 745	2-16, 2-19, 2-20
3 842 548 746	2-25, 2-31, 2-33
3 842 548 747	2-25, 2-31, 2-33
3 842 548 748	2-29, 2-31, 2-33
3 842 548 749	2-29, 2-31, 2-33
3 842 548 750	2-32, 2-34
3 842 548 751	2-32, 2-34
3 842 548 752	2-35, 2-39
3 842 548 753	2-35, 2-39, 10-7, 13-31
3 842 548 754	2-40
3 842 548 755	2-40, 13-7
3 842 548 756	2-40, 2-41, 2-43, 2-44
3 842 548 757	2-40, 2-41, 2-43, 2-44, 13-12, 13-31, 13-38
3 842 548 758	2-45, 2-47
3 842 548 759	2-45, 2-47, 13-17
3 842 548 760	2-46, 2-47, 2-48
3 842 548 761	2-46, 2-47, 2-48, 13-24, 13-31, 13-38
3 842 548 766	2-14
3 842 548 767	2-14
3 842 548 768	2-22
3 842 548 769	2-22
3 842 548 770	2-49
3 842 548 771	2-49
3 842 548 772	2-49
3 842 548 773	2-49
3 842 548 774	2-16, 2-19, 2-20
3 842 548 775	2-16, 2-19, 2-20
3 842 548 776	2-18
3 842 548 777	2-18
3 842 548 778	2-21
3 842 548 779	2-21
3 842 548 780	2-19, 2-20
3 842 548 781	2-19, 2-20
3 842 548 782	2-25
3 842 548 783	2-25
3 842 548 784	2-28
3 842 548 785	2-28
3 842 548 786	2-28
3 842 548 787	2-28
3 842 548 788	2-29
3 842 548 789	2-29
3 842 548 790	2-30
3 842 548 791	2-30
3 842 548 792	2-34
3 842 548 793	2-34
3 842 548 794	2-43
3 842 548 795	2-43, 13-17, 13-24
3 842 548 796	2-35, 2-39
3 842 548 797	2-35, 2-39
3 842 548 798	2-38
3 842 548 799	2-38
3 842 548 800	2-38
3 842 548 801	2-38
3 842 548 802	2-40
3 842 548 803	2-40
3 842 548 804	2-40, 2-41, 2-43
3 842 548 805	2-40, 2-41, 2-43
3 842 548 806	2-44
3 842 548 807	2-44
3 842 548 808	2-52, 2-53
3 842 548 809	2-52, 2-53
3 842 548 810	2-52, 2-53
3 842 548 811	2-52, 2-53
3 842 548 812	2-53
3 842 548 813	2-53
3 842 548 814	2-46, 2-47, 2-48
3 842 548 815	2-46, 2-47, 2-48
3 842 548 816	2-48
3 842 548 817	2-48
3 842 548 818	2-51
3 842 548 819	2-51
3 842 548 820	2-50
3 842 548 821	2-50
3 842 548 822	2-50
3 842 548 823	2-50
3 842 548 824	2-51, 2-52
3 842 548 825	2-51, 2-52
3 842 548 826	2-12
3 842 548 827	2-12
3 842 548 828	2-13
3 842 548 829	2-13
3 842 548 830	2-49
3 842 548 831	2-49
3 842 548 832	7-6
3 842 548 834	7-6
3 842 548 836	7-7
3 842 548 838	7-7
3 842 548 840	7-7
3 842 548 842	3-19
3 842 548 843	3-19
3 842 548 844	3-19
3 842 548 845	3-19
3 842 548 846	3-20
3 842 548 847	3-20
3 842 548 848	3-21
3 842 548 849	3-21
3 842 548 850	3-21
3 842 548 851	3-21
3 842 548 852	3-22
3 842 548 853	3-22
3 842 548 854	3-22
3 842 548 855	3-22
3 842 548 856	3-23
3 842 548 857	3-23
3 842 548 858	3-23
3 842 548 859	3-23
3 842 548 860	3-24
3 842 548 861	3-24
3 842 548 862	3-24
3 842 548 863	3-24
3 842 548 864	3-25
3 842 548 865	3-25
3 842 548 866	3-25
3 842 548 867	3-25
3 842 548 868	3-26
3 842 548 869	3-26
3 842 548 870	3-27
3 842 548 871	3-27
3 842 548 872	3-27
3 842 548 873	3-27
3 842 548 874	3-28
3 842 548 875	3-28
3 842 548 876	2-84
3 842 548 877	2-84
3 842 548 878	2-84
3 842 548 879	2-84
3 842 548 898	2-84
3 842 548 934	3-55
3 842 548 935	3-55
3 842 548 936	3-55
3 842 548 937	3-56
3 842 548 938	3-56
3 842 548 955	3-29
3 842 548 965	8-16
3 842 548 969	8-16
3 842 548 970	8-15
3 842 548 971	8-15
3 842 548 997	11-6
3 842 549 858	3-43
3 842 549 859	3-43
3 842 549 860	3-44
3 842 549 861	3-44
3 842 549 862	3-44
3 842 549 863	3-44
3 842 549 864	3-44
3 842 549 865	3-44
3 842 549 866	3-45
3 842 549 867	3-45
3 842 549 868	3-45
3 842 549 869	3-45
3 842 549 870	3-45
3 842 549 871	3-45
3 842 549 872	3-46
3 842 549 873	3-46
3 842 549 874	3-46
3 842 549 876	3-46
3 842 549 877	2-84
3 842 549 878	2-84
3 842 549 879	2-84
3 842 549 880	2-84
3 842 549 881	2-84
3 842 549 888	2-84
3 842 551 008	2-17
3 842 551 009	2-17
3 842 551 010	2-18
3 842 551 011	2-18
3 842 551 012	2-18
3 842 551 013	2-18
3 842 551 014	2-27
3 842 551 015	2-27
3 842 551 016	2-27
3 842 551 017	2-27
3 842 551 018	2-27
3 842 551 019	2-27
3 842 551 020	2-37
3 842 551 021	2-37
3 842 551 022	2-37
3 842 551 023	2-37
3 842 551 024	2-38
3 842 551 025	2-38
3 842 551 026	2-85
3 842 551 028	2-85
3 842 551 030	2-85
3 842 551 032	3-42
3 842 551 034	3-42
3 842 551 036	3-42
3 842 551 038	3-54
3 842 551 040	3-56
3 842 551 042	3-56
3 842 551 044	2-21
3 842 551 045	2-21
3 842 551 046	2-21
3 842 551 047	2-21
3 842 551 050	2-53
3 842 551 051	2-53
3 842 551 052	3-61
3 842 551 053	3-61
3 842 551 054	3-61
3 842 551 055	3-61
3 842 551 564	2-57
3 842 551 565	2-57
3 842 551 582	2-60
3 842 551 583	2-60
3 842 551 596	3-19
3 842 551 597	3-19
3 842 551 598	3-20
3 842 551 599	3-20
3 842 551 600	3-20
3 842 551 601	3-21
3 842 551 602	3-21

3 842 551 603	3-22
3 842 551 604	3-23
3 842 551 605	3-23
3 842 551 606	3-24
3 842 551 607	3-25
3 842 551 608	3-25
3 842 551 609	3-22
3 842 551 610	3-22
3 842 551 611	3-22
3 842 551 612	3-24
3 842 551 613	3-26
3 842 551 662	8-31
3 842 552 131	12-43
3 842 552 132	12-43
3 842 552 133	12-43
3 842 552 134	12-43
3 842 552 135	12-43
3 842 552 151	12-22, 12-25
3 842 552 174	12-44
3 842 552 175	12-44
3 842 552 176	12-44
3 842 552 177	12-44
3 842 552 240	11-7
3 842 552 245	11-7
3 842 552 246	11-7
3 842 552 247	11-6
3 842 552 248	11-6
3 842 552 249	11-5
3 842 552 250	11-5
3 842 552 251	11-5
3 842 552 252	11-5
3 842 552 253	11-5
3 842 552 254	11-5
3 842 552 255	11-5
3 842 552 256	11-5
3 842 552 257	11-7
3 842 552 258	11-7
3 842 552 259	11-7
3 842 552 260	11-7
3 842 552 263	11-9
3 842 552 265	11-9
3 842 552 266	11-9
3 842 552 267	11-4
3 842 552 268	11-4
3 842 552 270	11-4
3 842 552 273	11-4
3 842 552 275	11-4
3 842 552 421	12-7, 12-12
3 842 552 422	12-8, 12-9, 12-10, 12-12
3 842 552 423	12-7, 12-11
3 842 552 424	12-8, 12-9, 12-10, 12-11
3 842 553 611	2-35
3 842 553 612	2-41
3 842 553 613	2-45
3 842 553 614	2-39
3 842 553 615	2-43
3 842 553 616	2-43
3 842 553 617	2-47
3 842 553 630	8-21
3 842 553 631	8-21
3 842 553 638	8-21
3 842 553 639	8-17
3 842 553 640	8-17
3 842 553 967	6-22
3 842 553 973	11-9
3 842 553 974	11-9
3 842 554 134	8-18
3 842 554 136	8-18
3 842 554 149	6-5
3 842 554 150	8-19
3 842 554 151	8-19
3 842 554 152	8-20
3 842 554 157	2-60
3 842 554 280	10-7, 10-15
3 842 554 281	10-7, 10-12, 10-16
3 842 554 282	10-6
3 842 554 283	10-6, 10-12, 10-16, 18-21
3 842 554 284	10-6, 10-14, 18-21
3 842 554 285	10-6, 10-14, 10-15, 18-21
3 842 554 402	3-60
3 842 554 404	4-9
3 842 554 406	4-9
3 842 554 408	4-9
3 842 554 410	4-9
3 842 554 412	4-9
3 842 554 414	4-9
3 842 554 416	4-9
3 842 554 418	4-9
3 842 554 420	4-10
3 842 554 422	4-10
3 842 554 424	4-10
3 842 554 426	4-10
3 842 554 428	4-10
3 842 554 430	4-10
3 842 554 432	4-10
3 842 554 434	4-10
3 842 554 440	3-59
3 842 554 442	3-59
3 842 554 444	3-59
3 842 554 446	3-53
3 842 554 447	3-53
3 842 554 448	3-53
3 842 554 449	3-53
3 842 554 450	3-53
3 842 554 451	3-53
3 842 554 452	3-53
3 842 554 453	3-53
3 842 554 454	3-53
3 842 554 455	3-53
3 842 554 456	3-53
3 842 554 457	3-53
3 842 554 458	8-5
3 842 554 460	8-5
3 842 554 462	8-5
3 842 554 464	8-5
3 842 554 466	8-5
3 842 554 468	8-5
3 842 554 470	8-5
3 842 554 472	8-5
3 842 554 490	2-59
3 842 554 491	2-59
3 842 554 708	2-57
3 842 554 709	2-57
3 842 554 710	2-65, 12-4
3 842 554 711	2-65, 12-4
3 842 554 716	8-23
3 842 554 718	8-23
3 842 554 720	8-23
3 842 554 724	8-30
3 842 554 726	8-31
3 842 554 746	12-21
3 842 554 748	12-21
3 842 554 750	2-74
3 842 554 752	2-74
3 842 554 754	2-74
3 842 554 771	2-84
3 842 554 774	3-10
3 842 554 776	3-10
3 842 554 778	3-10
3 842 554 909	14-7
3 842 555 180	11-10
3 842 555 182	11-10
3 842 555 226	8-27, 12-3
3 842 555 260	8-28
3 842 555 262	8-28
3 842 555 268	2-84
3 842 555 270	7-2
3 842 555 272	7-2
3 842 555 274	7-2
3 842 555 276	7-2
3 842 555 282	7-3
3 842 555 284	7-4
3 842 555 286	7-4
3 842 555 288	7-5
3 842 555 290	7-5
3 842 555 292	7-5
3 842 555 550	7-10
3 842 555 552	7-10
3 842 555 554	8-25
3 842 555 556	8-25
3 842 555 558	8-25
3 842 555 560	8-25
3 842 555 562	8-25
3 842 555 564	8-24
3 842 555 568	9-6
3 842 555 572	8-8
3 842 555 574	8-8
3 842 555 576	8-8
3 842 555 584	3-60
3 842 555 586	3-60
3 842 555 588	3-60
3 842 555 590	3-60
3 842 555 592	3-60
3 842 555 594	3-60
3 842 555 596	3-60
3 842 555 598	3-60
3 842 555 610	6-23
3 842 555 616	3-29
3 842 555 649	2-30
3 842 555 650	2-29
3 842 555 651	2-32
3 842 555 652	2-42
3 842 555 653	2-83, 6-16
3 842 555 659	4-3
3 842 555 665	4-3
3 842 555 670	11-2
3 842 555 671	11-2
3 842 555 673	14-9
3 842 557 005	16-7
3 842 557 200	2-40
3 842 557 201	2-46
3 842 557 202	2-53
3 842 557 203	2-21
3 842 557 204	2-52
3 842 557 205	2-19
3 842 557 206	2-16
3 842 557 207	2-53
3 842 557 208	2-16
3 842 557 209	2-17
3 842 557 220	2-16
3 842 557 221	2-17
3 842 557 222	2-36
3 842 557 223	2-36
3 842 557 224	2-36
3 842 557 225	2-37
3 842 557 226	2-47
3 842 557 227	10-9
3 842 557 228	10-9
3 842 557 229	10-9
3 842 557 240	10-9
3 842 557 241	2-19
3 842 557 242	2-49
3 842 557 243	2-74
3 842 557 244	2-74
3 842 557 254	2-56
3 842 557 255	2-56
3 842 557 259	3-9
3 842 557 260	3-9
3 842 557 261	3-9
3 842 557 262	3-9
3 842 557 298	2-77
3 842 557 299	2-77
3 842 557 443	11-2
3 842 557 444	11-2
3 842 557 941	2-58
3 842 557 942	2-59
3 842 557 943	8-30
3 842 557 944	2-49
3 842 557 945	13-18
3 842 557 946	2-57
3 842 557 947	2-18
3 842 557 948	2-38
3 842 557 949	2-44
3 842 557 950	2-65, 12-4
3 842 557 951	2-17
3 842 557 952	2-18
3 842 557 953	2-18
3 842 557 954	2-37
3 842 557 955	2-37
3 842 557 956	2-38
3 842 557 957	2-38
3 842 557 958	13-32
3 842 557 960	2-54
3 842 558 323	9-6
3 842 558 328	2-64
3 842 558 329	2-64
3 842 558 330	2-64
3 842 558 331	2-64
3 842 558 332	2-63
3 842 558 333	2-63
3 842 558 334	2-63
3 842 558 566	3-13
3 842 558 567	3-13
3 842 558 568	3-13
3 842 558 644	11-8
3 842 558 646	11-8
3 842 558 648	11-8
3 842 558 650	11-8
3 842 558 651	11-8
3 842 558 652	11-8
3 842 558 653	11-8
3 842 558 654	11-8
3 842 559 310	2-64
3 842 559 337	11-6
3 842 559 338	11-6
3 842 559 345	2-82
3 842 559 346	2-82
3 842 990 087	2-49
3 842 990 090	2-49
3 842 990 091	2-49
3 842 990 092	2-46
3 842 990 093	2-46
3 842 990 094	2-46
3 842 990 097	2-53
3 842 990 098	2-53
3 842 990 099	2-53
3 842 990 111	9-5
3 842 990 115	8-30

3 842 990 116	8-30	3 842 990 690	2-40	3 842 992 861	2-47	3 842 993 123	2-25
3 842 990 292	2-49	3 842 990 720	2-16	3 842 992 864	2-47	3 842 993 124	2-25
3 842 990 300	2-43	3 842 990 721	2-16	3 842 992 884	2-67, 12-34	3 842 993 125	2-25
3 842 990 301	2-43	3 842 990 722	2-16	3 842 992 888	2-11	3 842 993 126	2-25
3 842 990 302	2-43	3 842 990 723	2-16	3 842 992 889	2-12	3 842 993 127	2-34
3 842 990 303	2-43	3 842 990 724	2-16	3 842 992 890	2-12	3 842 993 128	2-34
3 842 990 304	2-43	3 842 990 725	2-16	3 842 992 891	2-13	3 842 993 129	2-25
3 842 990 305	2-43	3 842 990 726	2-16	3 842 992 896	2-18	3 842 993 130	2-29
3 842 990 307	2-43	3 842 992 375	2-40	3 842 992 897	2-38	3 842 993 131	2-29
3 842 990 309	2-43	3 842 992 376	2-40	3 842 992 898	2-47, 13-38	3 842 993 132	2-29
3 842 990 311	2-43	3 842 992 378	2-47	3 842 992 903	2-67, 12-34	3 842 993 133	2-32
3 842 990 313	2-43	3 842 992 387	2-44	3 842 992 913	2-54	3 842 993 134	2-32
3 842 990 323	2-43	3 842 992 388	2-44	3 842 992 924	2-12	3 842 993 135	2-29
3 842 990 325	2-43	3 842 992 397	2-16	3 842 992 925	13-12, 13-13	3 842 993 136	2-29
3 842 990 329	2-43	3 842 992 398	2-17	3 842 992 926	2-19	3 842 993 137	2-29
3 842 990 331	2-43	3 842 992 399	2-16	3 842 992 927	2-44, 13-31, 13-38	3 842 993 138	2-29
3 842 990 335	2-43, 13-17, 13-24	3 842 992 400	2-17	3 842 992 928	2-44, 13-31	3 842 993 139	2-31
3 842 990 336	2-43	3 842 992 401	2-36	3 842 992 945	2-38	3 842 993 140	2-31
3 842 990 339	2-43, 13-17	3 842 992 402	2-36	3 842 992 946	2-65, 12-4	3 842 993 141	2-31
3 842 990 342	2-43	3 842 992 403	2-36	3 842 992 953	2-35	3 842 993 142	2-31
3 842 990 344	2-43	3 842 992 404	2-37	3 842 992 954	2-35	3 842 993 143	2-31
3 842 990 345	2-49	3 842 992 411	2-58	3 842 992 956	2-35	3 842 993 144	2-31
3 842 990 350	2-53	3 842 992 412	2-59	3 842 992 960	2-35	3 842 993 145	2-31
3 842 990 351	2-53	3 842 992 415	2-45, 13-17	3 842 992 961	2-46	3 842 993 146	2-31
3 842 990 352	2-53	3 842 992 416	2-45	3 842 992 962	2-53	3 842 993 147	2-32
3 842 990 353	2-53	3 842 992 417	2-45	3 842 992 963	2-53	3 842 993 148	2-32
3 842 990 354	2-53	3 842 992 418	2-45, 13-17	3 842 992 965	2-16	3 842 993 149	2-32
3 842 990 355	2-53	3 842 992 419	2-45	3 842 992 967	2-35	3 842 993 150	2-32
3 842 990 357	2-53	3 842 992 420	2-45	3 842 992 969	2-39	3 842 993 151	2-32
3 842 990 359	2-53	3 842 992 421	2-45	3 842 992 970	10-9	3 842 993 152	2-34
3 842 990 370	2-53	3 842 992 422	2-45	3 842 992 971	10-9	3 842 993 153	2-34
3 842 990 373	2-53	3 842 992 423	2-45	3 842 992 972	10-9	3 842 993 154	2-34
3 842 990 409	2-68, 12-35	3 842 992 425	2-35, 10-7	3 842 992 973	10-9	3 842 993 155	2-34
3 842 990 416	2-47, 13-31, 13-38	3 842 992 426	2-35	3 842 992 977	10-9	3 842 993 156	2-50
3 842 990 417	2-47	3 842 992 427	2-35	3 842 992 978	10-9	3 842 993 157	2-50
3 842 990 418	2-47	3 842 992 430	2-21	3 842 992 991	2-13	3 842 993 158	2-50
3 842 990 419	2-47	3 842 992 431	2-21	3 842 992 992	2-13	3 842 993 159	2-50
3 842 990 421	2-47	3 842 992 432	2-41, 13-12	3 842 992 999	2-38	3 842 993 160	2-50
3 842 990 450	2-53	3 842 992 433	2-41	3 842 993 001	2-38	3 842 993 161	2-50
3 842 990 453	2-53	3 842 992 435	2-41	3 842 993 010	2-17	3 842 993 162	2-50
3 842 990 454	2-53	3 842 992 436	2-41	3 842 993 011	2-18	3 842 993 163	2-50
3 842 990 464	2-53	3 842 992 437	2-41	3 842 993 012	2-18	3 842 993 164	2-50
3 842 990 472	2-53	3 842 992 438	13-17, 13-18	3 842 993 013	2-37	3 842 993 165	2-50
3 842 990 478	2-53	3 842 992 440	13-24, 13-25	3 842 993 014	2-37	3 842 993 166	2-50
3 842 990 481	2-53	3 842 992 441	13-38, 13-39	3 842 993 015	2-38	3 842 993 167	2-50
3 842 990 500	2-46, 13-24	3 842 992 443	2-52	3 842 993 016	2-19	3 842 993 168	2-50
3 842 990 501	2-46	3 842 992 444	2-52	3 842 993 017	2-55	3 842 993 169	2-50
3 842 990 502	2-46	3 842 992 445	2-52	3 842 993 018	2-55	3 842 993 170	2-50
3 842 990 505	2-46	3 842 992 446	2-52	3 842 993 019	2-55	3 842 993 171	2-51
3 842 990 507	2-46	3 842 992 447	2-52	3 842 993 020	2-55	3 842 993 172	2-51
3 842 990 517	2-39	3 842 992 448	2-52	3 842 993 029	12-27	3 842 993 173	2-51
3 842 990 518	2-39	3 842 992 449	2-52	3 842 993 033	2-21	3 842 993 174	2-51
3 842 990 519	2-39	3 842 992 452	2-41	3 842 993 052	12-42	3 842 993 175	2-51
3 842 990 520	2-39	3 842 992 453	2-41	3 842 993 061	13-7, 13-8	3 842 993 176	2-51
3 842 990 521	2-39	3 842 992 457	2-19	3 842 993 062	13-17, 13-18	3 842 993 177	2-51
3 842 990 570	2-40, 13-7	3 842 992 458	2-19	3 842 993 063	2-60	3 842 993 178	2-52
3 842 990 571	2-40	3 842 992 459	2-19	3 842 993 071	2-63	3 842 993 179	2-52
3 842 990 572	2-40	3 842 992 460	2-19	3 842 993 072	2-63	3 842 993 180	2-52
3 842 990 573	2-40	3 842 992 462	2-19	3 842 993 073	2-63	3 842 993 181	2-52
3 842 990 575	2-40	3 842 992 463	2-19	3 842 993 077	2-14	3 842 993 182	2-52
3 842 990 584	2-40	3 842 992 473	2-48	3 842 993 078	2-22	3 842 993 183	2-52
3 842 990 640	2-39	3 842 992 474	2-48	3 842 993 079	2-49	3 842 993 184	2-28
3 842 990 642	2-39	3 842 992 475	2-48	3 842 993 080	13-31, 13-32	3 842 993 185	2-25
3 842 990 644	2-39	3 842 992 476	2-21	3 842 993 081	2-47, 13-31	3 842 993 186	2-25
3 842 990 646	2-39	3 842 992 493	2-57	3 842 993 082	2-46, 13-24	3 842 993 187	2-26
3 842 990 648	2-39	3 842 992 676	2-66, 12-33	3 842 993 084	2-41, 13-12	3 842 993 188	2-26
3 842 990 670	2-40	3 842 992 857	2-47	3 842 993 085	2-40, 13-7	3 842 993 189	2-26
3 842 990 672	2-40	3 842 992 858	2-47	3 842 993 120	2-25	3 842 993 190	2-26
3 842 990 674	2-40	3 842 992 859	2-47	3 842 993 121	2-25	3 842 993 191	2-26
3 842 990 688	2-40	3 842 992 860	2-47	3 842 993 122	2-25	3 842 993 192	2-26

3 842 993 193	2-30
3 842 993 194	2-51
3 842 993 195	2-27
3 842 993 196	2-51
3 842 993 197	2-27
3 842 993 198	2-27
3 842 993 199	2-51
3 842 993 200	2-51
3 842 993 201	2-34
3 842 993 202	2-34
3 842 993 203	2-34
3 842 993 204	2-34
3 842 993 225	2-31
3 842 993 226	2-34
3 842 993 229	2-34
3 842 993 230	2-11
3 842 993 231	2-11
3 842 993 256	2-28
3 842 993 257	2-28
3 842 993 259	2-67, 12-34
3 842 993 306	12-45, 16-4
3 842 993 308	6-15
3 842 993 316	2-66, 12-19
3 842 993 317	2-70
3 842 993 321	12-24
3 842 993 322	12-24
3 842 993 336	2-62
3 842 993 337	2-62
3 842 993 411	2-60
3 842 993 420	2-19
3 842 993 421	2-11
3 842 993 422	2-11
3 842 993 423	2-33
3 842 993 424	2-29
3 842 993 425	8-29
3 842 993 426	8-29
3 842 993 427	8-32
3 842 993 428	8-32
3 842 993 429	8-32
3 842 993 430	8-32
3 842 993 431	12-24
3 842 993 432	12-24
3 842 993 434	2-48
3 842 993 435	2-48
3 842 993 436	2-48
3 842 993 446	2-63
3 842 993 449	2-45
3 842 993 450	2-40
3 842 993 489	2-71
3 842 993 493	2-11
3 842 993 494	2-11
3 842 993 495	2-11
3 842 993 496	2-11
3 842 993 497	2-13
3 842 993 498	2-13
3 842 993 499	2-13
3 842 993 500	2-13
3 842 993 501	2-13
3 842 993 511	12-27
3 842 993 512	12-27
3 842 993 517	2-63
3 842 993 527	2-63
3 842 993 621	2-46
3 842 993 628	2-46
3 842 993 635	2-42
3 842 993 644	2-41
3 842 993 653	2-33
3 842 993 654	2-30
3 842 993 658	2-33
3 842 993 661	2-43
3 842 993 662	2-41
3 842 993 663	2-50
3 842 993 664	2-51
3 842 993 665	2-50
3 842 993 668	2-53
3 842 993 669	2-21
3 842 993 670	2-52
3 842 993 671	2-53
3 842 993 672	2-34
3 842 993 673	2-34
3 842 993 674	2-32
3 842 993 675	2-33
3 842 993 676	2-47
3 842 993 677	2-47
3 842 993 678	2-48
3 842 993 679	2-46
3 842 993 680	2-45
3 842 993 681	2-45
3 842 993 682	2-44
3 842 993 683	2-14
3 842 993 684	2-22
3 842 993 685	2-51
3 842 993 686	2-49
3 842 993 687	2-52
3 842 993 688	2-21
3 842 993 689	2-48
3 842 993 690	2-11
3 842 993 691	2-11
3 842 993 692	2-12
3 842 993 693	2-12
3 842 993 694	2-11
3 842 993 695	2-12
3 842 993 696	2-13
3 842 993 697	2-13
3 842 993 698	2-13
3 842 993 699	2-49
3 842 993 700	2-49
3 842 993 703	2-16
3 842 993 704	2-16
3 842 993 705	2-16
3 842 993 706	2-17
3 842 993 707	2-17
3 842 993 708	2-17
3 842 993 709	2-18
3 842 993 710	2-21
3 842 993 711	2-18
3 842 993 712	2-19
3 842 993 713	2-19
3 842 993 714	2-18
3 842 993 715	2-19
3 842 993 716	2-31
3 842 993 717	2-31
3 842 993 718	2-27
3 842 993 719	2-25
3 842 993 720	2-26, 8-22
3 842 993 721	2-26
3 842 993 722	2-26
3 842 993 723	2-28
3 842 993 724	2-25
3 842 993 725	2-28
3 842 993 726	2-27
3 842 993 727	2-27
3 842 993 728	2-29
3 842 993 729	2-29
3 842 993 730	2-30
3 842 993 731	2-43
3 842 993 732	2-44
3 842 993 733	2-37
3 842 993 734	2-39
3 842 993 735	2-37
3 842 993 736	2-38
3 842 993 737	2-35
3 842 993 738	2-36
3 842 993 739	2-36, 8-22
3 842 993 740	2-36
3 842 993 741	2-37
3 842 993 742	2-38
3 842 993 743	2-40
3 842 993 744	2-38
3 842 993 751	2-41
3 842 993 752	2-42
3 842 993 753	2-30
3 842 993 755	2-46
3 842 993 756	2-46
3 842 993 757	2-33
3 842 993 758	2-33
3 842 993 759	2-40
3 842 993 760	2-25
3 842 993 761	2-35
3 842 993 762	2-20
3 842 993 763	2-20
3 842 993 764	2-45
3 842 993 767	2-30
3 842 993 768	2-29
3 842 993 769	2-32
3 842 993 770	2-42
3 842 993 887	16-3
3 842 993 952	13-12, 13-13
3 842 993 966	13-7, 13-8
3 842 993 967	13-12, 13-13
3 842 993 968	13-17, 13-18, 13-24, 13-25
3 842 993 969	13-31, 13-32, 13-38, 13-39
3 842 994 000	12-43
3 842 994 001	12-43
3 842 994 635	12-42
3 842 994 659	13-7, 13-10
3 842 994 662	13-31, 13-36, 13-38, 13-43
3 842 994 702	13-20, 13-27, 13-34, 13-41
3 842 994 711	13-12, 13-15
3 842 994 742	10-6
3 842 994 744	10-7
3 842 994 745	10-7
3 842 994 811	13-48
3 842 994 812	13-48
3 842 994 813	13-48
3 842 994 821	13-17, 13-22, 13-24, 13-29
3 842 994 832	12-38
3 842 994 839	12-36
3 842 994 863	16-4
3 842 994 889	12-39
3 842 994 907	12-40
3 842 994 979	2-87
3 842 994 988	12-28
3 842 994 989	12-28
3 842 995 007	12-30
3 842 995 008	12-28
3 842 995 017	12-30
3 842 995 027	2-66, 12-19
3 842 996 191	2-74
3 842 996 192	2-74
3 842 996 356	11-4
3 842 996 357	11-4
3 842 996 358	11-4
3 842 996 359	11-4
3 842 998 495	13-6
3 842 998 496	13-11
3 842 998 497	13-16
3 842 998 498	13-23
3 842 998 499	13-30
3 842 998 500	13-37
8 981 535 323	12-8
8 981 535 324	12-8
8 981 535 325	12-10
8 981 535 326	12-10
8 981 535 476	12-7
8 981 535 477	12-7
8 981 535 478	12-9
8 981 535 479	12-9
8 981 535 890	12-8, 12-9, 12-10, 12-12
8 981 535 891	12-7, 12-11

Index

▶ **A**
Accessories for protective devices 9-1
Adjustment unit 12-45
Air-supply elements 5-2
Al angle profile 19" 2-56
Angle profile 2-59
Anti-torsion element 3-41
Attachment kit for safety switch 10-20

▶ **B**
Ball catch 9-8
Base plate
– 120x120 6-11
– 135x135 6-10
– 150x150 6-11
– 270x360 6-10
– Steel 6-8
Bearing pedestal 4-11
Bearing ring 2-83
Bolt connector 3-60
Bow-type handle 8-23
Bracket 2-69, 3-18
– R 3-30
– S 7-8
Bumper 9-5

▶ **C**
Cable bracket 11-10
Cable duct
– AL 11-3
– PA 11-2
Cam roller guide LF6C
– Complete axis 13-11
– Components 13-12
Cam roller guide LF6S
– Complete axis 13-6
– Components 13-7
Cam roller guide LF12C
– Complete axis 13-23
– Components 13-24
Cam roller guide LF12S
– Complete axis 13-16
– Components 13-17
Cam roller guide LF20C
– Complete axis 13-37
– Components 13-38
Cam roller guide LF20S
– Complete axis 13-30
– Components 13-31
Cam roller guides LF...C 13-5
Cam roller guides LF...S 13-4
Central bolt 3-41
Chamber lock for swing and sliding doors 8-19
Clamp bushing 7-13
Clamping element 10-19
Clamping lever 4-13
Clamping profile 2-55
Cloth holder 2-87
Collar screw 3-5
Components
– For ESD applications 17-1, 17-2
– For height adjustment 45x45 and 45x60 12-43
– For lateral guides 16-1, 16-2
Components for ESD applications 17-1
Components for lateral guides 16-1
Components for sliding door 12-4
Connection elements 3-1
– Selection criteria 3-3
Connection piece 5-4
Connection screw fitting M12-1/4" 5-4
Connector 45° 3-53
Container mount 2-61
Conveyor media
– Profiles for installing 2-66
Conveyor sections
– Made of SP 2 section profiles and accumulation roller chains 12-39
– Made of SP 4/R section profiles and accumulation roller chains 12-36
Conveyor track
– EcoFlow 12-27
– Lean 12-19
– XLean 12-24
Conveyor track made of section profiles and roller elements 12-33
Corner bracket 3-47
Counterbalance 9-2
Cover cap 2-83, 3-41, 3-54, 3-56, 8-30
– Made of diecast zinc 2-83
– With hole 2-83
Cover profiles 2-84
Cubic connector 3-43
Customized profile finishing 18-7
– Cross milling 18-9
– Drill hole 18-8
– Lengthwise milling 18-10
– Miter cut 18-11

▶ **D**
Damping ring 6-4
Dimensioning of synchronous shafts 13-55
Door handle profile 8-32
Door lock 8-12
– “Compact” for swing doors 8-17
– For EcoSafe sliding doors 8-13
– For swing and sliding doors 8-11
– For swing doors 8-14
– “Multi-use” for swing and sliding doors 8-15
Doors and fittings 8-1
Double ball stop latch 9-7
Double wheel 6-16
Drilling jigs 14-2

▶ **E**
EcoFlow 12-27
– Accessories 12-31
– Conveyor track 12-27
– Stop gate and return stop 12-30
EcoFlow accessories 12-31
EcoFlow stop gates and return stops 12-30
EcoSafe assembly kit
– Double door 10-16
– Sliding door without superstructure 10-15
– Sliding door with superstructure 10-14
– System door 10-12
EcoSafe components for building protective fences 10-4
EcoSafe protective frame 10-6
– Load-bearing capacity data 18-21
EcoSafe support
– Load-bearing capacity data 18-21
EcoShape tubular framing system 2-72
– Retaining ring 2-77
– Swivel bearing 2-77
EcoSlide 12-6
– 30x30x80 12-7
– 30x30x160 12-7
– 45x45x80 12-8
– 45x45x160 12-8
– 45x60x80 12-9
– 45x60x160 12-9
– 45x90x80 12-10
– 45x90x160 12-10
Edge protector 8-32
Elements for manual movement 12-1
End connector 3-49
End piece 8-30
ESD applications,
– Components for 17-1
eShop 2-8
Expanding nut 3-10

▶ **F**
Feet and wheels 6-1
FiFo station 15-1
Flange 13-45
Flanged plate 5-3
Flange nut 3-6
Flexible grinder for anodized surfaces 14-6
Floor dowel 6-12
Folding door element 8-10
Foot 6-4
– AL 6-12
– Stainless steel 6-14
Foundation bracket 3-34
Frame profile
– 22.5x30 2-57
– 22.5x45 2-5

▶ **G**
Grab container base 2-63
Grab ledge 2-63
Grooved plate 30x100 2-62
Ground terminal 10-18

▶ **H**
Handle bar 9-5
Heavy-duty connector 180x180 dynamic load 3-29
Heavy-duty wheel 6-20
Height adjustment 12-43
Hinge 8-4
– Adjustable 8-9
– Aluminum 8-6
– LIFTOFF 8-7
– Plastic 8-5
– Removable 8-8
Hinge profile 8-3
Holder
– AL 3-35
– For lateral guide, fixed 16-6
– For lateral guide, variable 16-8

▶ **I**
Individual profile finishing (Quick & Easy) 18-7
Inner bracket 3-14
– R 3-15
Installation elements 11-1

▶ **J**
Joint
– 20x20 4-3
– 30x30 4-4
– 40x40 4-5, 4-7
– 40x40 support 4-5
– 45x45 4-5
– 45x45 lockable 4-2
– 45x45 support 4-5
– 60x45 4-8
– 60x60 4-8
Joints 4-1

▶ **L**
Labeling clips 2-86
Lateral guides
– Components for 16-2
– Holders for, fixed 16-6
– Holders for, variable 16-8
– Profile rails for 16-3
Leveling foot 6-4
Lifting wheel 6-22
– Rotatable pedal 6-23
Linear guide drives 13-44
Linear guides 13-1
– Sizes, designs, and loads 13-3
– Technical data for roller, design, mounting 13-49
Load-bearing capacity data
– For EcoSafe protective frame 18-21
– For EcoSafe support 18-21
Load-bearing capacity of profile connection 18-16
Load-dependent design 13-50
Lock mechanism for double door 10-17
Longitudinal end connection 5-5
Longitudinal end connector 3-59
Longitudinal end connector 45 Pneu 5-6

▶ **M**
Magnet catch 9-6
Manual movement,
– Elements for 12-1
Material chute 2-63
Material number overview 19-1
Metal bracket 3-33
Miter bracket 3-17
Miter cutter 14-6
Modular leveling feet 6-2
Mortise lock
– For swing doors 8-21
Mounting of panel elements 7-1
Mounting rim profile 7-2
– Cleanroom 7-3
Mounting with coupling 13-46
MTpro 2-8
Multi-slider 12-16

▶ **P**
Panel elements
– Mounting of 7-1
Parallel connector 3-11
Pinion 12-18
Plate 6-6
Plug-in shafts 13-47
Potential equalizer 7-11
Profile connector 3-39
Profile deflection 18-14
Profile finishing 2-7, 2-9
Profile rail 2-65
Profile rails and accessories
– For lateral guides 16-3
Profiles for installing conveyor media 2-66
Profile slot load-bearing capacity 18-15
Protective devices,
– Accessories for 9-1
Protective devices and EcoSafe partition walls 10-1
Protective fences, EcoSafe components for construction of 10-4
Protective grille profiles 7-12, 10-8
Protective pane profile
– Cleanroom 7-5
– PVC 7-4

▶ **Q**
Quick connector
– Bendable – end-to-end 3-57
– Bendable – end-to-slot 3-58
– Slot 6 mm, 0°, 90° 3-54
– Slot 8/10 mm, 0° 3-55, 18-18
– Slot 8/10 mm, 90° 3-56
Quick & Easy 2-8
Quick-lock 11-11
QV mounting kit 3-62

▶ **R**
Rack 12-18
Radial compensation 2-85
Rectangular tube 2-54
Refill end-piece 2-63
Refill end-piece and grab ledge 2-63
Retainer ring 7-9
Retaining ring D28L 2-77
Round tube D28 2-69
Rubber profile 2-87

▶ **S**
Safety catch 9-4
Safety handle 8-24
Safety strip safety kit 10-10
Screw bar profile 7-10
Seal 5-6
Sealing profile 8-26
Sealing strip 8-25
Selection guide
– Rollers 6-18
Slide hanger 12-2
Slider 8-27
– Flat lockable 12-11
– For panel element 12-3
– For profiles 12-13
Sliding block 3-7
Sliding block profile 3-7
Sliding door
– Components for 12-4
Sliding door profile
– Al 45 8-30
– Al Clip 8-29
– PVC 8-28
Slot connector 3-13
Snap hook 12-2
Spring 3-8
Spring clamping element 10-21

Standard profile finishing 18-2
– Blind hole DBx 18-4
– Standard milling F1 18-6
– Thread Mx 18-5
– Through-hole Dx 18-3
Standard profile finishing (Quick & Easy) 18-2
Standards for protective equipment 10-2
Star knob 4-13
Steel bracket 3-32
Strut profile D28x55 2-69
Strut profiles 2-1
– Technical data 18-12
– With slot 6 mm 2-10
– With slot 8 mm 2-15
– With slot 10 mm 2-23
– With slot 10 mm, modular dimension 40 mm 2-25
– With slot 10 mm, modular dimension 45 mm 2-35
– With slot 10 mm, modular dimension 50 mm 2-50
– With slot 10 mm, modular dimension 60 mm 2-52
Supporting arm joint 4-10
Supporting bracket 3-33
– AL 3-37
– AL, lateral 3-38
Support wheels 12-17
Suspension bracket 10-10
Suspension piece for frames 10-22
Suspension profile 2-60
Swivel bearing 4-9
Swivel-in sliding block 3-8
Swivel-in sliding block profile 3-8
Swivel mounting 180° 4-12
Synchronous shafts 13-47

▶ **T**
T-bolt 3-6
T-connector
– 45 Pneu 5-6
– Connection elements 3-51
– D28 2-69
Technical data 18-1
– Customized profile finishing 18-7
– LF, layout, assembly 13-49
– Load-bearing capacity data for EcoSafe protective frame and EcoSafe support 18-21
– Load-bearing capacity of profile connection 18-16
– Profile deflection 18-14
– Profiles 2-3
– Profile slot load-bearing capacity 18-15
– Standard profile finishing 18-2
– Strut profiles 18-12
Tensioning connector 3-12
Threaded sleeve 6-7
Tilt lever 10-11
T-nut 3-4
Tool holder 14-7
– TAPE 50 mm 14-9
Tools 14-1
Tool shelf 14-7
Torx® offset screwdriver 14-5
Torx®, offset screwdriver 14-5
Trolley 2-65

▶ **U**
Universal plate 7-11

▶ **V**
Variofix block 7-6
Variofix block S 7-7
Variofix remover 14-6

▶ **W**
Washer 6-12
Wheel 6-17
– with mounting flange 6-24

Notes

Easy configuration in the eShop or with MTpro
www.boschrexroth.com/shop

Drilling DI, drilling sequence DIS

Material number / length / [slot designation=DI; PS=...; *OS=...;* **DM=...;** *HT=...***]**; *[...]*
Material number / length / [slot designation=DIS; PS=...; *OS=...;* **DM=...;** *HT=...;* **SN=...; SD=...]**; *[...]*

End finishing	Parameter		Order example for profile 45x90L
Drill hole **DI** 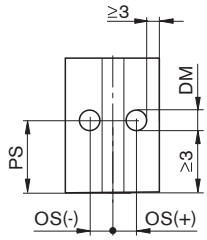	**PS**	Center point of hole PS_{min} = DM/2 + 3 mm; PS_{max} = L - (DM/2 + 3 mm)	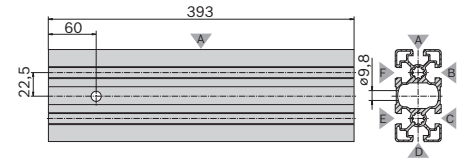 **3 842 993 662** / 393 / [B=DI; PS=60; OS=22.5; DM=9.8]
	OS	Offset starting point (optional) Select OS so that the hole does not cut through any slot edges	
	DM	DM hole diameter DM; see table	
	HT	Depth of drilling (optional) Through-holes made if no information provided. HT_{max}, see table	
Drilling sequence **DIS** 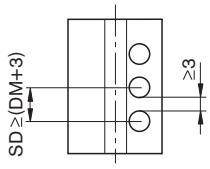	**PS,** *OS,* **DM, HT**	As for drill hole DI	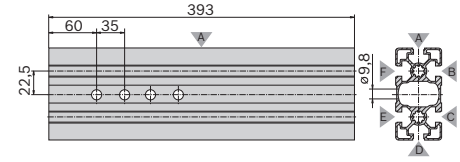 **3 842 993 662** / 393 / [B=DIS; PS=60; OS=22.5; DM=9.8; SN=4; SD=35]
	SN	Number of finishes SN_{max} = INT((L - 3 - PS - DM/2) / SD) + 1	
	SD	Distance between adjacent finishes SD_{min} = DM + 3	

Permissible hole diameters, permissible hole depths (in mm)								
DM	5.8	6.4	7.8	8.0	8.4	9.8	11.0	17.0
HT_{max}	40.0	45.0	45.0	45.0	45.0	50.0	60.0	75.0

ATTENTION: If HT_{max} is not sufficient to drill through the profile, you must order two opposite bores!

Cross milling MT, cross milling sequence MTS

Material number / length / [slot designation=MT; PS=...; HT=...; PE=...]; *[...]*
Material number / length / [slot designation=MTS; PS=...; HT=...; PE=...; SN=...; SD=...]; *[...]*

End finishing	Parameter		Order example for profile 45x90L
Cross milling **MT** 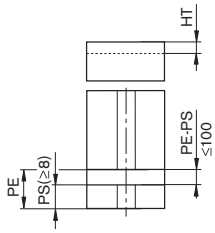	**PS**	Starting point of milling PS_{min} = 8 mm; PS_{min} = 60 mm on the underside of the profile	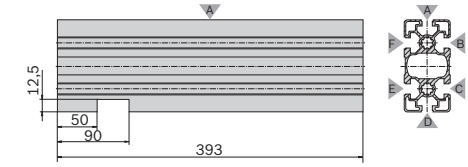 **3 842 993 662** / 393 / [D=MT; PS=50; HT=12,5; PE=90]
	HT	Depth of milling HT_{max} = 5.5 mm (slot 6 mm) HT_{max} = 9.0 mm (slot 8 mm) HT_{max} = 12.5 mm (slot 10 mm)	
	PE	End point of milling PE_{max} = L - 8 mm; 8 mm ≤ PE - PS ≤ 100 mm	
Cross milling sequence **MTS** 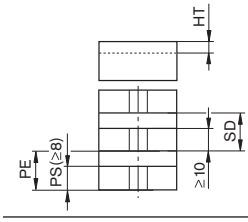	**PS, HT, PE**	As for cross milling MT	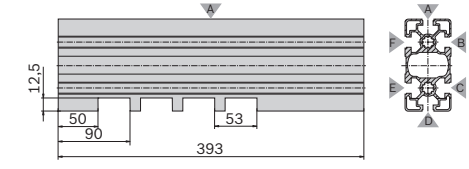 **3 842 993 662** / 393 / [D=MTS; PS=50; HT=12,5; PE=90; SN=4; SD=53]
	SN	Number of finishes SN_{max} = INT((L - 8 - PE) / SD) +1	
	SD	Distance between adjacent finishes SD_{min} = (PE - PS) + 10	

Lengthwise milling MI, lengthwise milling sequence MIS

Material number / length / [slot designation=MI; PS=...; *OS=...;* **DM=...; HT=...; PE=...; RG=...]**; *[...]*
Material number / length / [slot designation=MIS; PS=...; *OS=...;* **DM=...; HT=...; PE=...; RG=...; SN=...; SD=...]**; *[...]*

End finishing	Parameter		Order example for profile 45x90L
Lengthwise milling **MI** 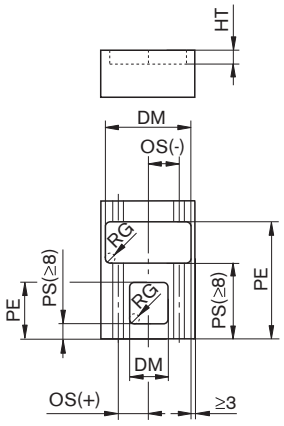	**PS**	Starting point of milling PS_{min} = 8 mm PS_{min} = 60 mm on the underside of the profile (see order tables for guidance)	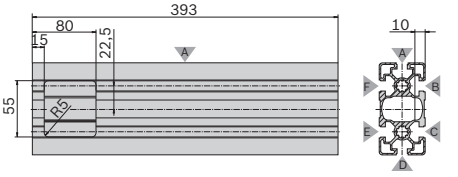 **3 842 993 662** / 393 / [B=MI; PS=15; OS=22.5; DM=55; HT=10; PE=80; RG=5]
	OS	Offset starting point (optional)	
	DM	Milling width DM_{min} = 8 mm; DM_{max} = profile width/height - 6 mm At least 3 mm of profile must remain on both sides	
	HT	Depth of milling. HT_{max} = 5.5 mm (slot 6 mm) HT_{max} = 9.0 mm (slot 8 mm) HT_{max} = 12.5 mm (slot 10 mm)	
	PE	End point of milling PE_{max} = L - 8 mm 8 mm ≤ PE - PS ≤ 100 mm	
	RG	Radius of milling geometry RG = 3 mm; 4 mm; 5 mm; 8 mm	
Lengthwise milling sequence **MIS** 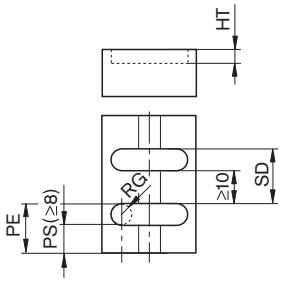	**PS,** *OS,* **DM, HT, PE, RG**	As for lengthwise milling MI	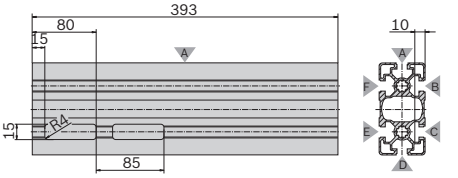 **3 842 993 662** / 393 / [C=MIS; PS=15; DM=15; HT=10; PE=80; RG=4; SN=2; SD=85]
	SN	Number of finishes SN_{max} = INT(L - 8 - PE / SD) + 1	
	SD	Distance between adjacent finishes SD_{min} = (PE - PS) + 10	

Miter cut

Material number / length / [FS=side; DG=miter angle]; *[BS=side; DG=miter angle]*

End finishing	Parameter		Order example for profile 45x90L
Miter cut 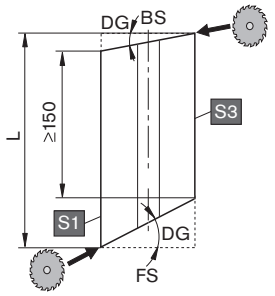	**FS**	Front side S1, S3 – profile side on which the miter cut begins	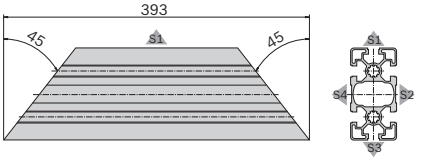
	BS	Back side S1, S3 – profile side on which the miter cut begins	
	DG	Miter bracket DG > 0 The angle is always specified as a positive value. Note the maximum permissible miter angle (see order tables)	**3 842 993 662** / 393 / [FS=S3; DG=45]; [BS=S3; DG=45]

Easy configuration in the eShop or with MTpro
www.boschrexroth.com/shop

Standard profile finishing

Order key for through-holes, blind holes, standard milling:
Material number / length / slot designation = finishing at profile start / finishing at profile end; ...

Order key for threads:
Material number / length / Z = Mx at profile start / Mx at profile end

Standard profile finishing

Standard profile finishing		6	8	10
Through-hole for corner connections with central bolt		**D5.8** 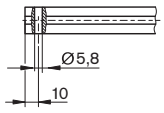	**D7.8** 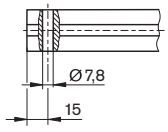	**D9.8** 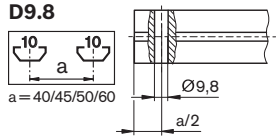
Through-hole for bolt connectors and quick connectors		**D8** 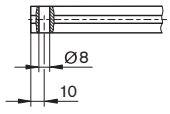	**D11** 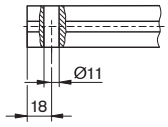	**D17** 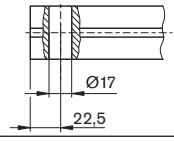
Blind hole For longitudinal end connectors and quick connectors in closed profiles		**DB8** 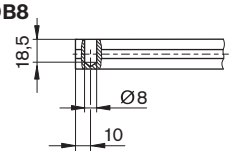	**DB11** 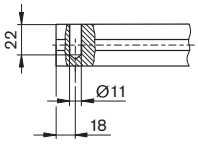	**DB17** 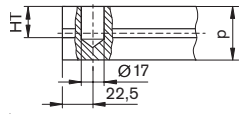 **p** 40 45 50 60 **HT** 31 34 36 41
Threads in all core holes for accessories		**M6** 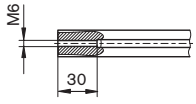	**M8** 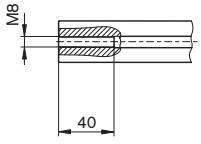	**M12** 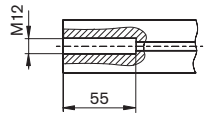 **M16** 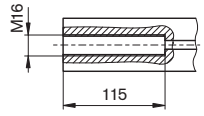
Standard milling for cross connectors				**F1** 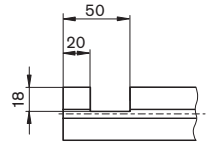

Minimum profile lengths (mm) for standard profile finishing on one or both sides

6	–	M6	D5.8	D8/ DB8
–	50	50	50	50
M6	50	70	50	70
D5.8	50	50	50	50
D8/ DB8	50	50	50	50

8	–	M8	D7.8	D11/ DB11
–	50	50	50	50
M8	50	80	62	70
D7.8	50	62	60	50
D11/ DB11	50	70	50	60

10	–	M12	M16	D9.8	D17/ DB17	F1
–	50	60	120	50	60	60
M12	60	110	180	90	60	110
M16	120	180	240	150	170	170
D9.8	50	90	150	80	70	90
D17/ DB17	60	90	170	70	80	90
F1	60	110	170	90	90	80

Notice: In the case of clashes with the values in the order table, the larger value applies.

Profile finishing – Quick & Easy

Logical structure of the order key

Material number/length/[slot designation = finishing; parameter set]

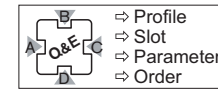

Example: **Profile 45x90L with through-hole D17 in slot B**

3 842 993 662	/ 393 /	B = D17/-
Material number	Length	Standard profile finishing Through-hole D17 in slot B

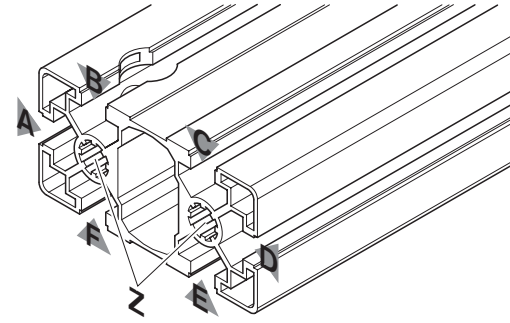

Standard profile finishing

▶ Through-hole	D
▶ Blind hole	DB
▶ Thread cutting	M
▶ Standard milling	F1

Individual profile finishing

▶ Drill hole	DI
▶ Drilling sequence	DIS
▶ Cross milling	MT
▶ Cross milling sequence	MTS
▶ Lengthwise milling	MI
▶ Lengthwise milling sequence	MIS
▶ Miter cut	S1 / S3

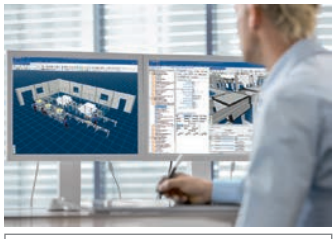

You can configure your profile really quickly and easily in the Rexroth eShop or with the profile configurator in MT*pro*









Bosch Rexroth AG
Postfach 30 02 07
70442 Stuttgart, Germany
www.boschrexroth.com

Find your local contact person here:
www.boschrexroth.com/contact

The data specified above only serves to describe the product. No statements concerning a certain condition or suitability for a certain application can be derived from our information. The information given does not exempt the user from the obligation of own judgment and verification. It must be remembered that our products are subject to a natural process of wear and aging.

Material No.: 3 842 540 392 (2019-07)
© Bosch Rexroth AG 2019
Subject to changes!